REDLINE PARLUX

DOUBLE TAILGATE LIGHT BAR (2PC)

INSTALLATION GUIDE

WHAT'S INCLUDED

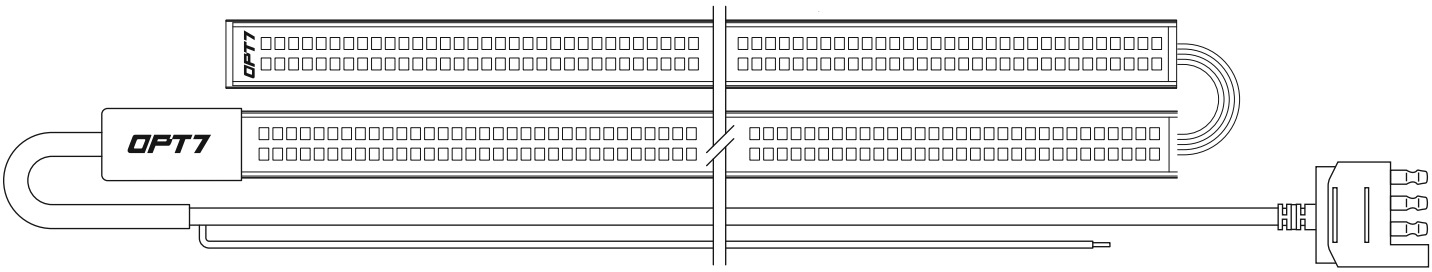

1X Double Redline LED Bar

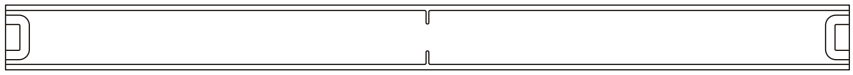

1X Plastic Aligner

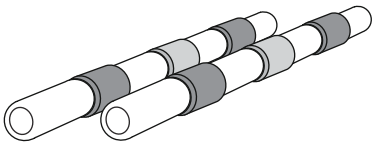

2X Heat Shrinkable Wire Connector

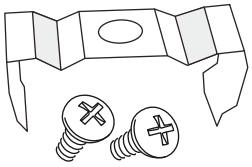

4X Mounting Clips



1X Adhesive Booster

INSTALLATION

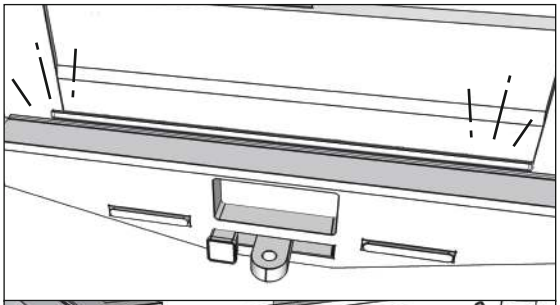

STEP1

Test the Redline LED Bar for functionality before mounting on vehicle.

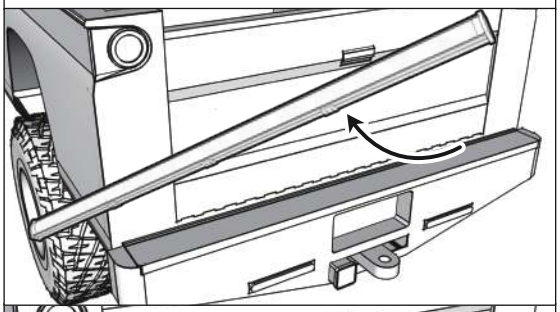

STEP2

Remove the tailgate from vehicle to prep the area.

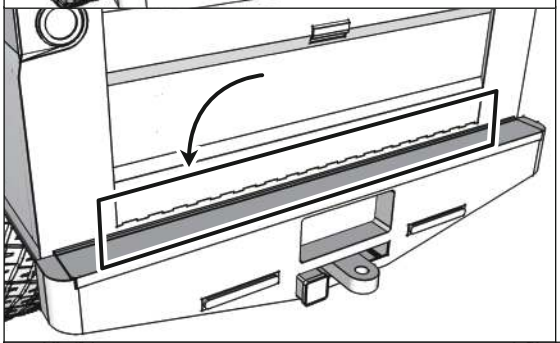

STEP3

Thoroughly clean the area where the Redline LED Bar will be mounted.

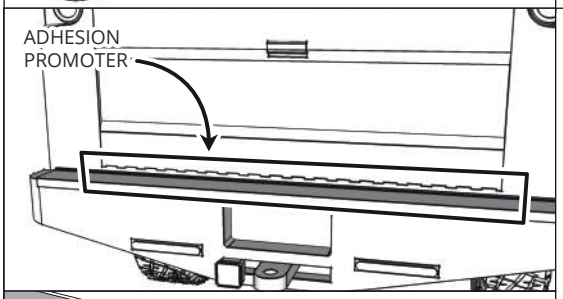

OPTION 1

STEP4

Apply the Adhesive Promoter to the cleaned area.

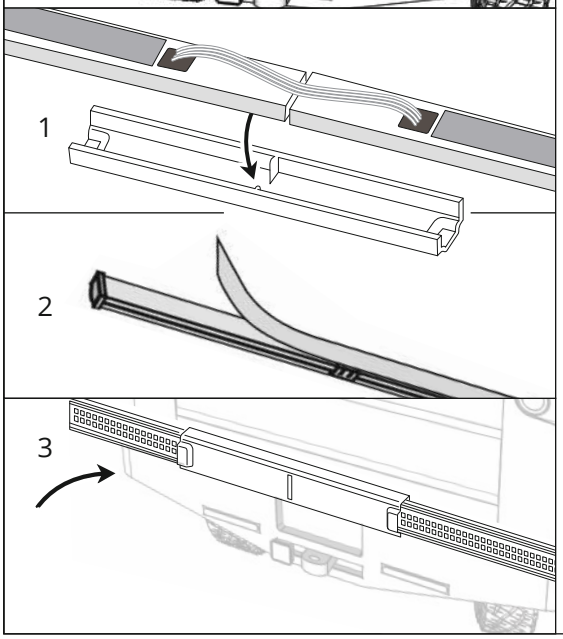

STEP5

1 Take the plastic aligner and fix it between the two LED bar.

2 Peel the back off of adhesive on each end of the LED bar.

3 When this is all done, hold the LED bar with both hands and apply firmly to the cleaned area. Remove the plastic aligner.

INSTALLATION

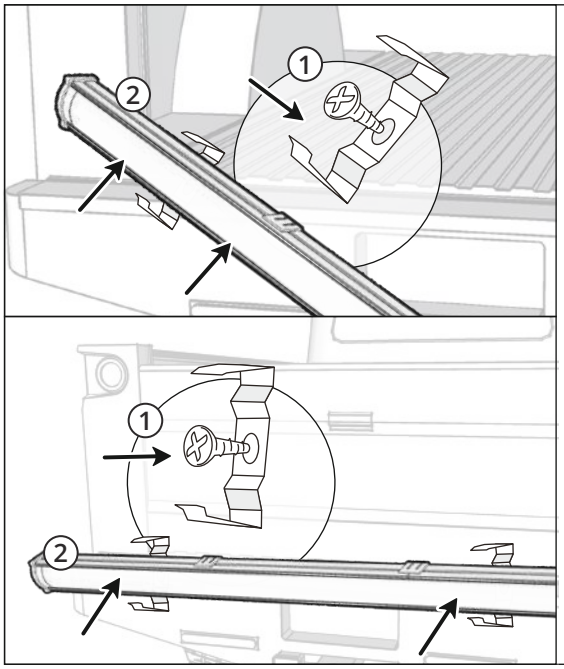

STEP4

OPTION 2

For optimal installation of the Redline LED Bar, carefully plan and mark the desired bracket mounting locations, taking placement into consideration to ensure a straight application.

STEP5

Securely mount the Redline LED Bar to your vehicle using the provided screws and clips to ensure a solid installation.

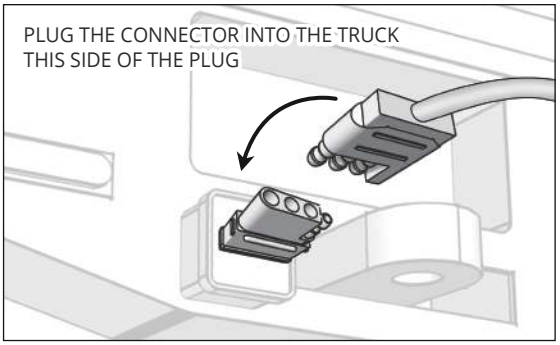

STEP6

Plug the 4-pin flat connector into the proper receptacle on the vehicle.

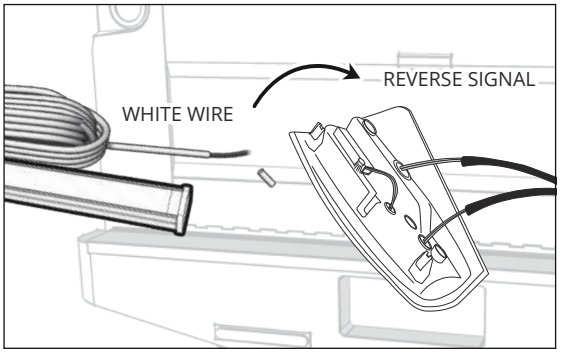

STEP7 WHERE TO CONNECT THE REVERSE SIGNAL ?

Splice the white wire coming from the Redline LED Bar to the factory tail light and use the heat shrinkable wiring connector we provided.

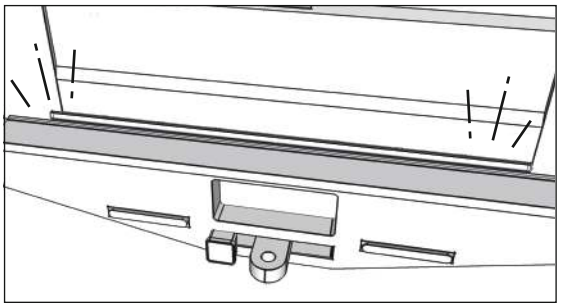

STEP8

Test the Redline LED Bar again for function.

OPTIONAL

HOW TO CONNECT TO YOUR VEHICLE ?

The diagrams are the recommend installation method for the Redline Triple Tailgate Light Bar. Please confirm the year model and make of your vehicle before installing.

Feel free to contact us using the link below for product inquiries or installation support.
OPT7 Support Team: https://www.opt-7.com/pages/customer-support

Notice: Redline Adapter Connectors are sold separately. Please refer to the following links

https://www.opt-7.com/collections/truck-redline-tailgate-led-light-bars

2015~2020 F150 (16PIN)

ALL MODELS
WITH BLIS/BACKUP CAMERA/ASSIST SENSOR

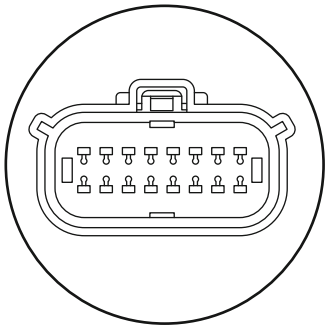

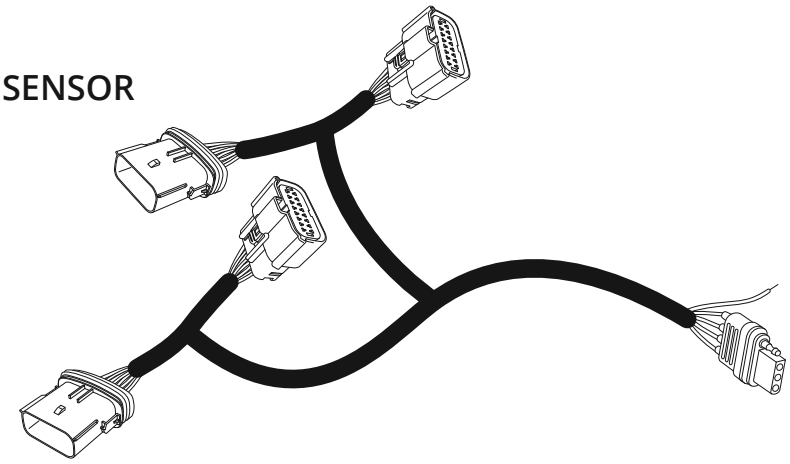

2018~2020 F150 (6PIN)

XL, XLT, LARIAT
NO BLIS/BACKUP CAMERA/ASSIST SENSOR

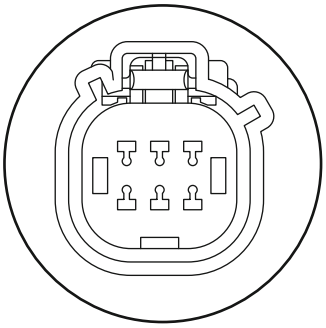

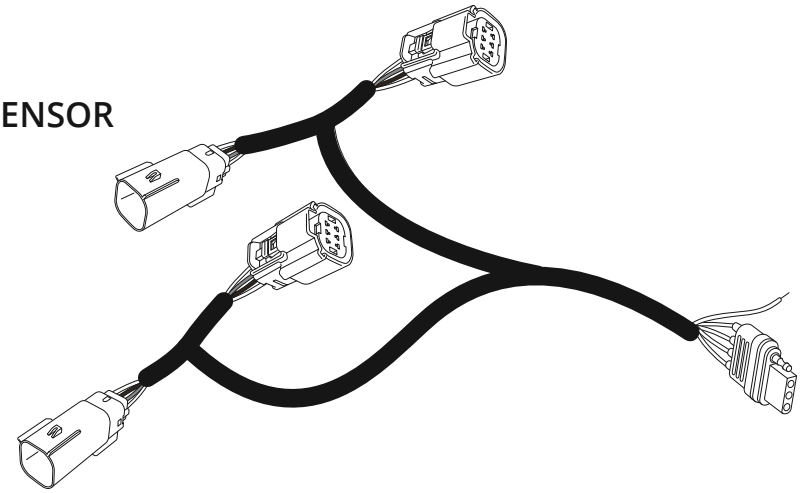

OPTIONAL

2021~2023 F150

XL, XLT

/w BLIS/BACKUP CAMERA/ASSIST SENSOR

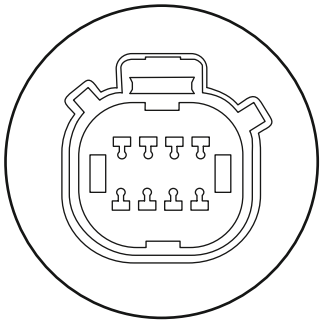

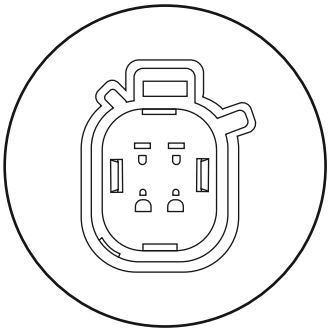

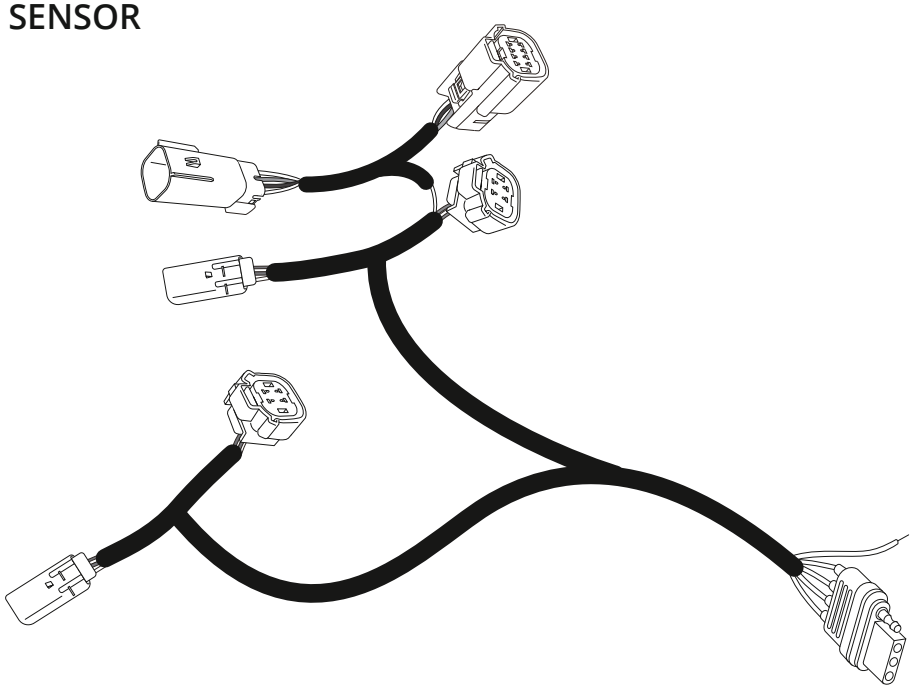

OPTIONAL

2015~2018 F150 (3PIN)

XL, XLT, LARIAT

NO BLIS/BACKUP CAMERA/ASSIST SENSOR

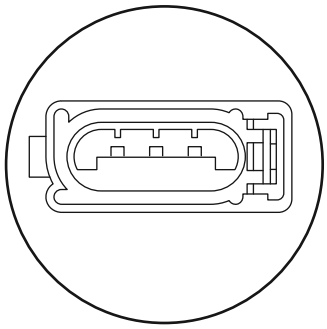

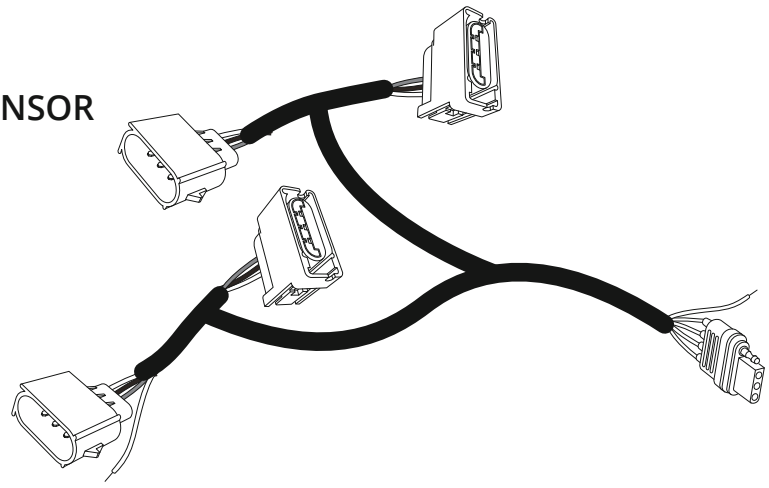

2019~2021 Silverado/Sierra 1500 (6PIN)

ALL MODELS

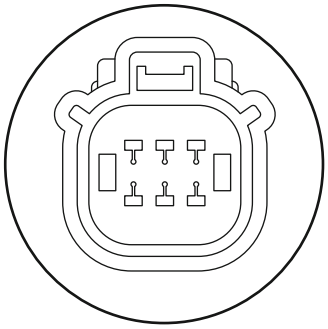

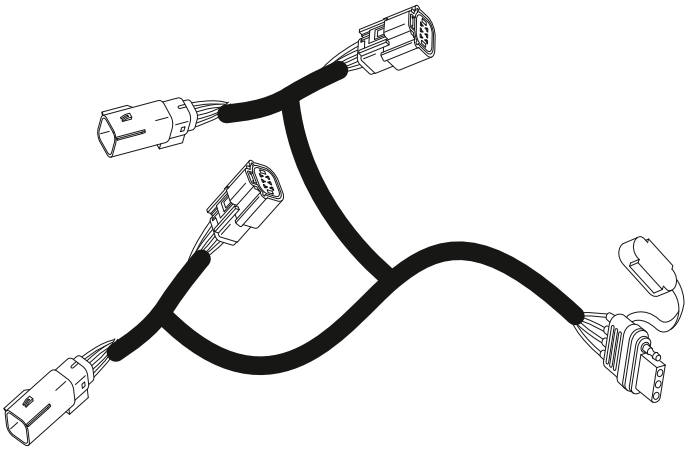

OPT7 Easy Connect USCAR 7 Pin to 4 Pin Harness with Reverse Wire

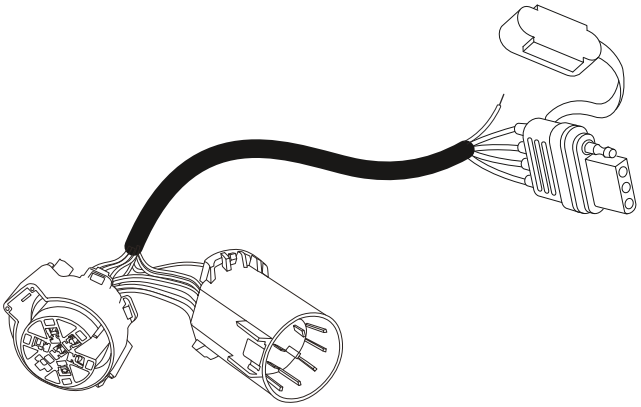

OPTIONAL

OPT7 Redline 4.9ft Hardwire Harness

For Tailgate Light Bars
(7 Wiring Connectors Included)

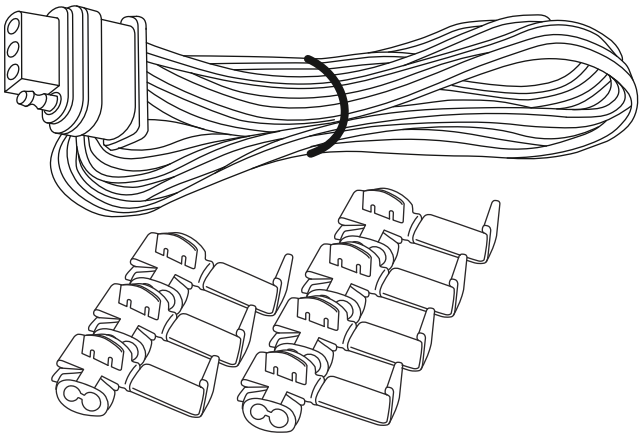

HARD WIRING

If hard-wiring, use image below to identify wire color functions and pair them to appropriately identified wires on vehicle.

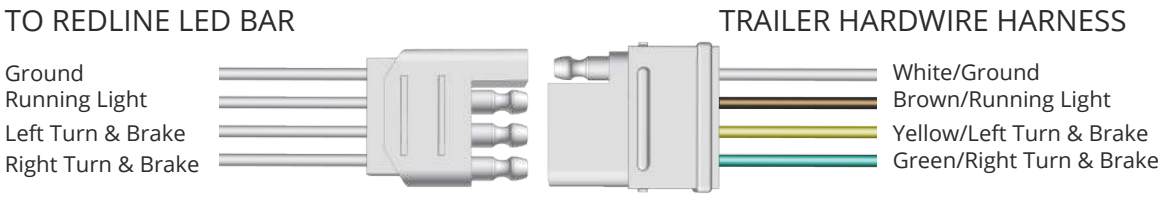

DISCLAIMER

OPT7 Lighting is not liable for damages, injuries, or death while installing this product. The Installation Guide is intended as assistance to reduce setup time. OPT7 Lighting assumes no responsibility for improper installation. If you are unfamiliar with your vehicle or inexperienced with aftermarket upgrades, please seek professional assistance.

1 YEAR WARRANTY