TRAEGER®
WOOD FIRED GRILLS

Wood Fired Grills – Tailgater

ASSEMBLY GUIDE

IMPORTANT, RETAIN FOR FUTURE REFERENCE: READ CAREFULLY

Please read this entire manual before installation and use of this pellet fuel-burning appliance. Failure to follow these instructions could result in property damage, bodily injury, or even death. Contact your local building or fire officials about restrictions and installation inspection requirements in your area.

A MAJOR CAUSE OF FIRES IS FAILURE TO MAINTAIN REQUIRED CLEARANCES (AIR SPACES) BETWEEN COMBUSTIBLE MATERIALS. IT IS OF UTMOST IMPORTANCE THAT THIS PRODUCT BE INSTALLED ONLY IN ACCORDANCE WITH THESE INSTRUCTIONS.

WARNING!

Many parts of the grill will become very hot during operation. Care must be taken to avoid burns, both during operation and afterwards, while the grill is still hot.

- Never leave the grill unattended when young children are present.
- Never move the grill when it is operating.
- Let the grill cool completely before moving or attempting to transport.
- **Grill is very heavy. Always lift grill with TWO people.**

For English-only assistance with assembly, installation, parts, and customer service, contact Traeger's VIP-365 Customer Service.

Phone: I-800-TRAEGER
Email: service@traegergrills.com
Mail: Traeger Pellet Grills LLC
1215 E. Wilmington Ave.
Salt Lake City, UT 84106

traegergrills.com

TFB30KLF
T01725

PARTS LIST

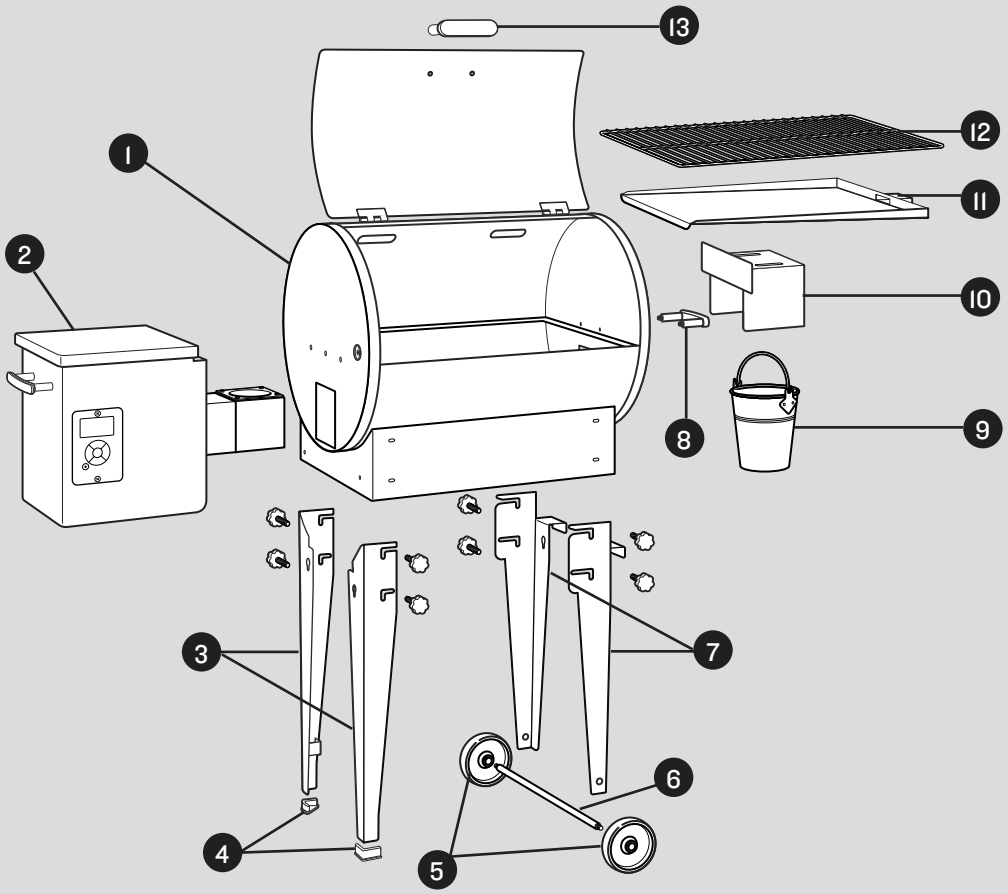

NOTE: Several of the parts come with preinstalled fasteners, including:

- Axle (preinstalled with 2 nuts and 2 washers)
- Side-lift handle and grill lid handle (preinstalled with bolts and washers)

BLISTER PACK PARTS NEEDED

A

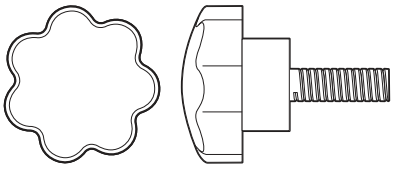

Knob Screws: 1/4-20 (8 pcs)

B

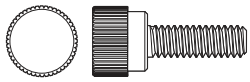

Screws: 1/4-20 (4 pcs)

Wrenches
(2 pcs)

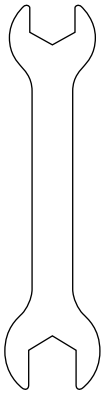

WARNING!

- When operating this grill under overhead combustibles, a **MINIMUM** of 40 in. (102 cm) is required.
- When operating this grill, maintain a **MINIMUM** distance of 18 in. (45.7 cm) from the grill to combustibles.

IMPORTANT!

- The grill is heavy. Always lift the grill with TWO people.

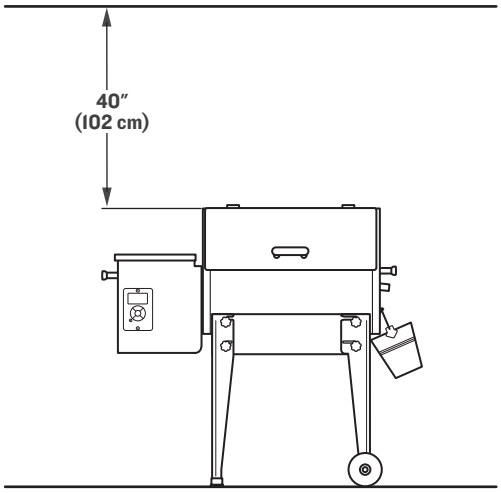

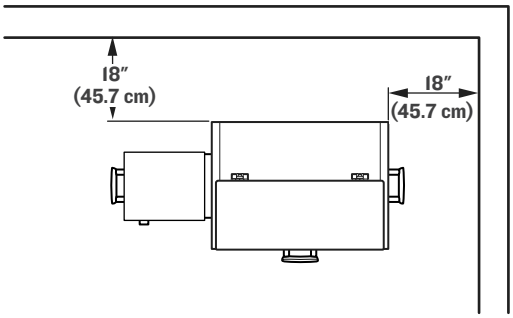

GRAB THE 6-PACK, GET THE TOOLS, CUE THE RADIO —

IT'S ALMOST TRAEGER'ING TIME.

READ ALL INSTRUCTIONS BEFORE INSTALLING AND USING THE GRILL

Traeger'ing is more fun with friends! **(No, really, you will need two people to lift the grill.)**

1 UNPACK COMPONENTS

NOTE: Grill is secured in box with multiple cardboard pieces, some of which hold grill parts. Be sure to check ALL packaging for parts as you unpack them. Do NOT remove tape from grill barrel at this time.

NOTE: You should assemble grill on a clean, flat surface, as you will need to lay it upside down at different times during assembly.

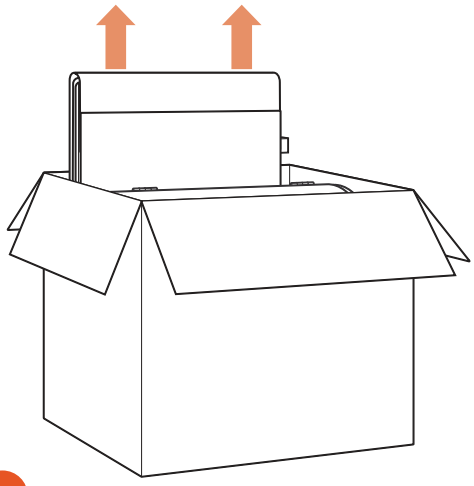

1

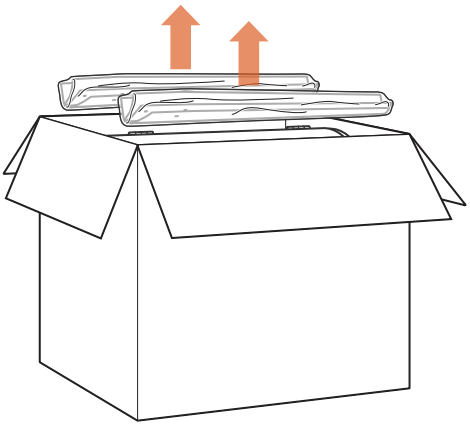

2

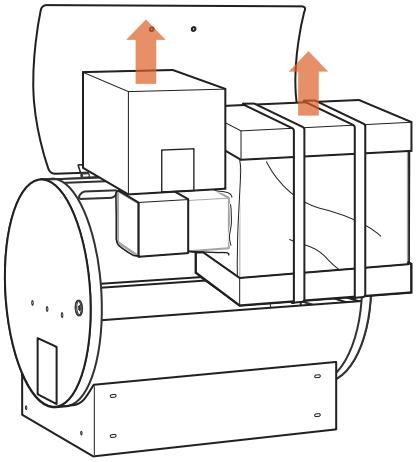

3

2 INSTALL LEGS

NOTE: Two legs have holes at the small end for the axle. Position them at the barrel end with the small rectangular hole.

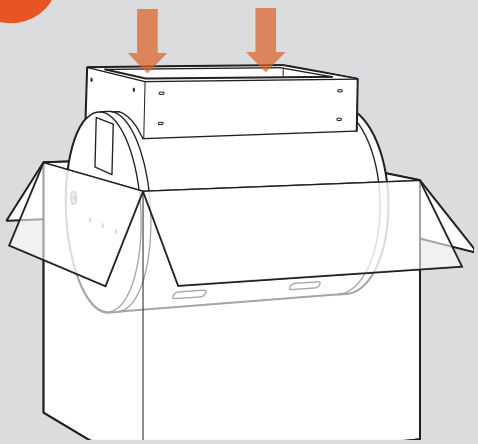

Turn the grill barrel upside down and place in the carton, using the packaging materials to support it.

1

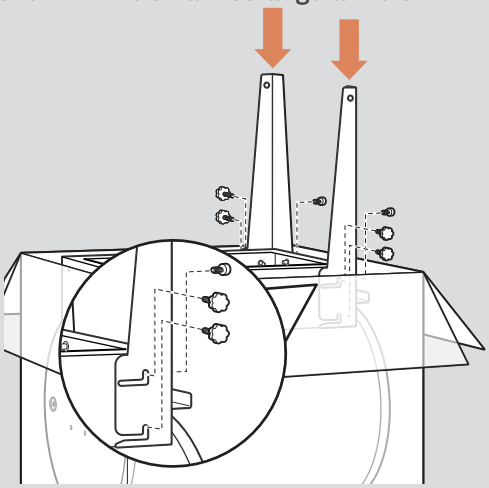

In this step: 7 x 2
A x 4 B x 2

2

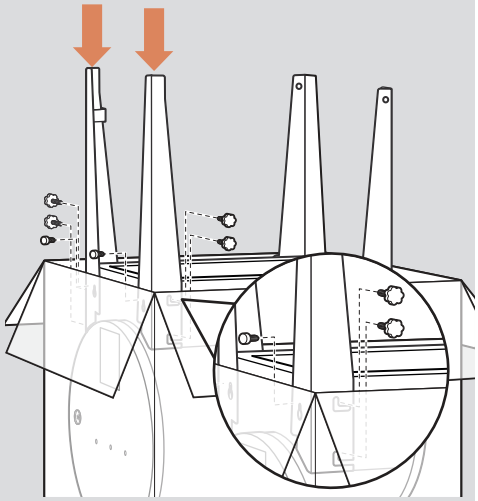

In this step: 3 x 2
A x 4 B x 2

3

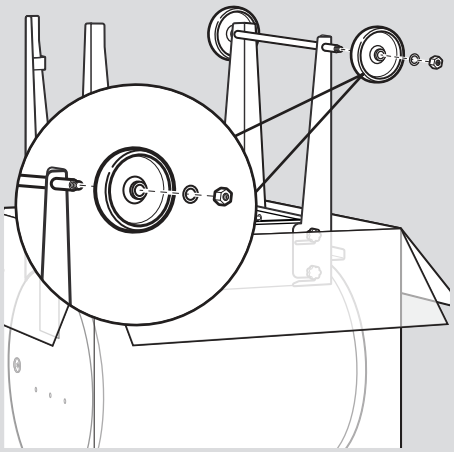

In this step: 5 x 2 6

4

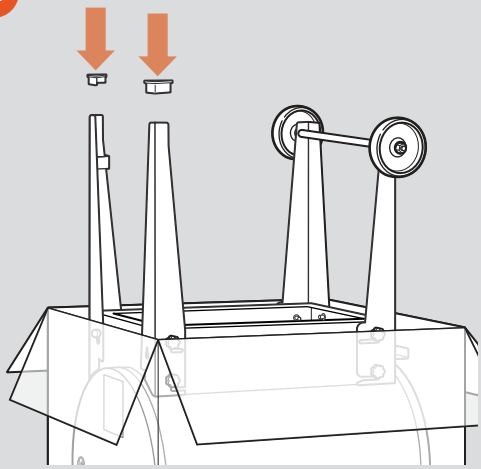

In this step: 4 x 2

5

3 ASSEMBLE UPPER GRILL COMPONENTS

This will require TWO people.

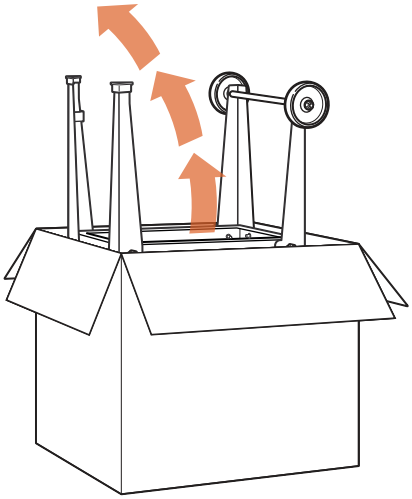

1

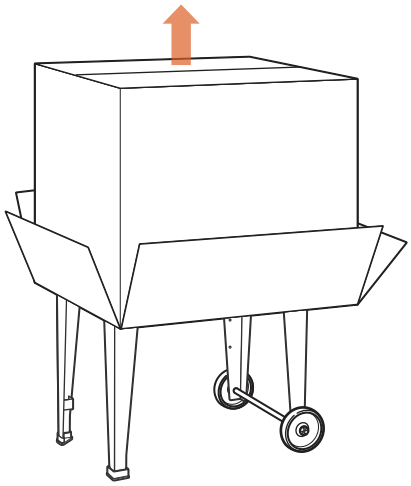

2

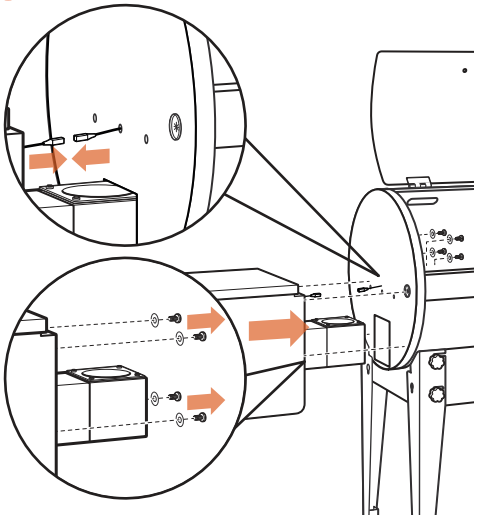

3

In this step: 2

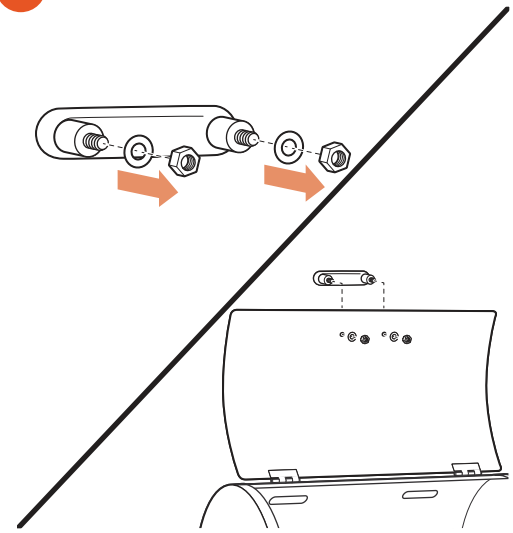

4

In this step: 13

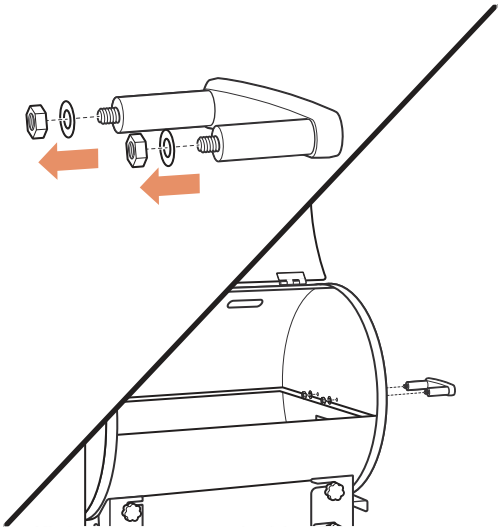

5

In this step: 8

4 PLACE INNER GRILL COMPONENTS AND BUCKET

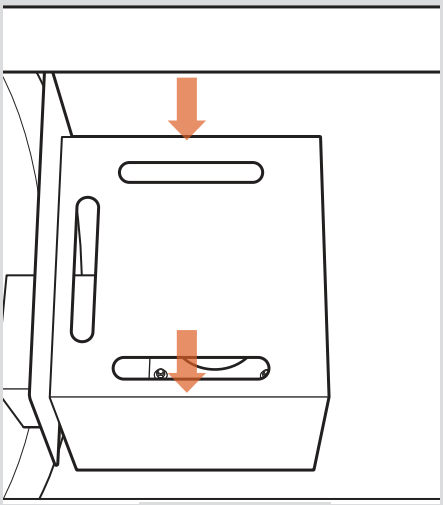

1

In this step: 10

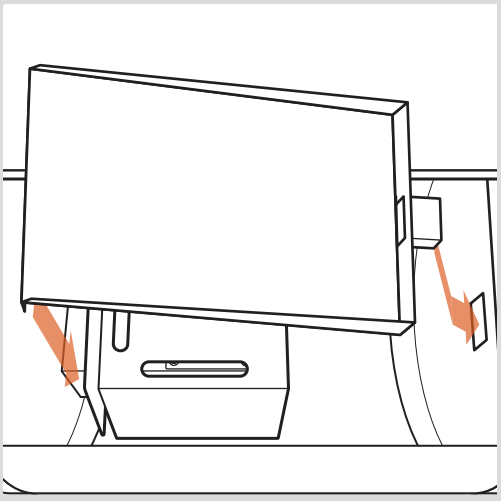

2

In this step: 11

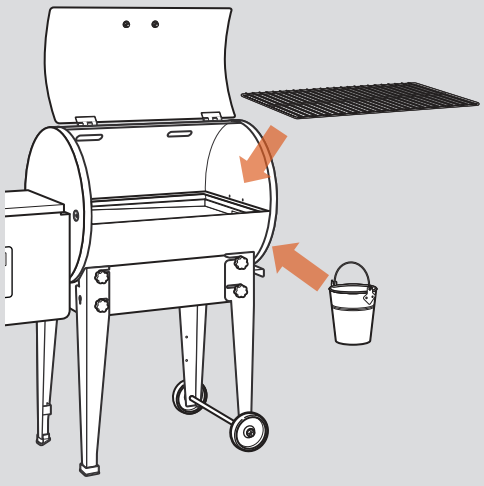

3

In this step: 9 12

You are ready to season your grill and get Traeger'ing!

Refer to your Use and Care Instructions for operation instructions.