by Schneider Electric

Installation and Operation
Back-UPS® BR1000G-IN / BR1500G-IN

Inventory

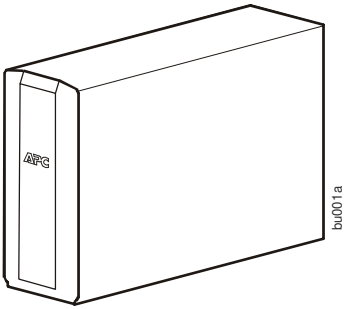

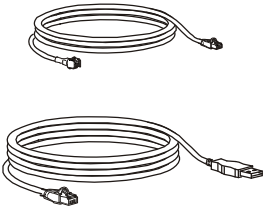



Safety and General Information

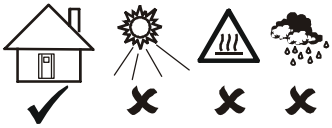

This UPS is intended for indoor use only.
Do not operate this UPS in direct sunlight, in contact with fluids, or where there is excessive dust or humidity.
Be sure the air vents on the UPS are not blocked. Allow adequate space for proper ventilation.

The battery typically lasts for two to three years. Environmental factors impact battery life. Elevated ambient temperatures, poor quality AC power, and frequent short duration discharges will shorten battery life.

Connect the Back-UPS power cable directly to a wall outlet. Do not use surge protectors or extension cords.

Specifications

Model	BR1000G-IN	BR1500G-IN
VA	1000 VA	1500 VA
Maximum Load	600 W	865 W
Nominal Input Voltage	220 Vac-240 Vac	
Online Input Voltage Range	170 Vac to 294 Vac	
Automatic Voltage Regulation	182 Vac-216 Vac +17% 252 Vac-282 Vac -17%	
Frequency Range	50/60 Hz ± 1 Hz	
On-battery wave shape	Step-approximated sine-wave	
Typical Recharge Time	8 hours	
Transfer Time	10 ms, maximum	
Operating Temperature	0° to 40° C (32° to 104°F)	
Storage Temperature	-5° to 45° C (23° to 113° F)	
Unit Dimensions	30.1 × 11.2 × 38.2 cm (11.9 × 4.4 × 15 in)	
Unit Weight	12 kg (26 lbs)	
Interface	Serial*, USB	
To order replacement battery cartridge APCRBC144, contact APC Customer Support. Always recycle used batteries.		

*A standard serial cable is incompatible with the Back-UPS. Use only an APC serial cable. To order an APC serial cable go to the APC Web site or call customer service.
Refer to APC Customer Support for contact information.

Connect the Equipment

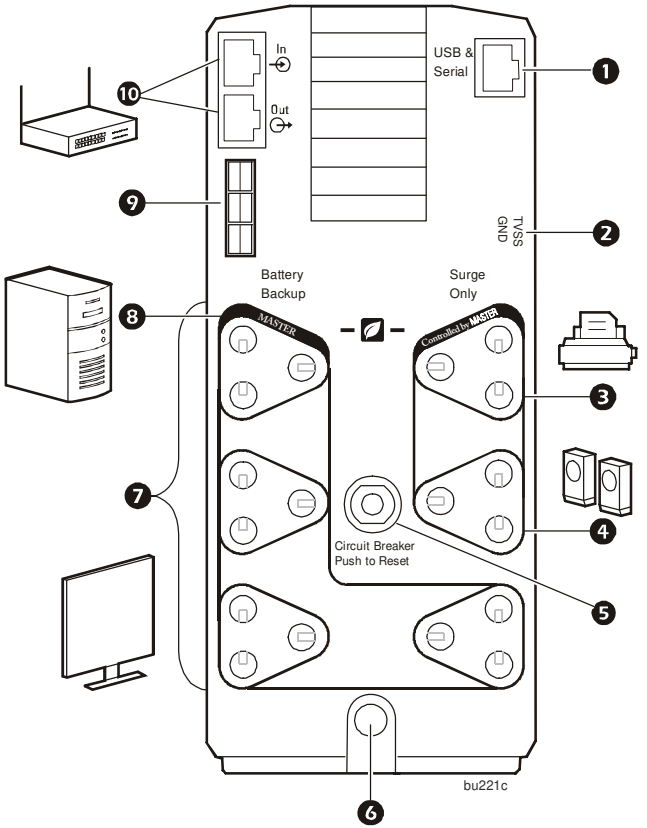

❶	**USB and Serial Data port**	To use PowerChute Personal Edition, connect the supplied USB software cable or serial cable.
❷	**Ground screw**	Connect the ground wire from another surge suppression device such as a network or data line surge protector to the ground screw on the Back-UPS.
❸	**Surge Protection outlet, Controlled by Master outlet**	This outlet provides surge protection during a power outage. This outlet will disconnect from utility power during a power outage, or in the event that the Master outlet goes into Sleep mode.
❹	**Surge Protection outlet**	This outlet provides full-time protection for connected equipment from power surges when the Back-UPS is turned on or off. The Surge Protection outlet does not provide battery backup to connected equipment. Connect a printer, scanner or other noncritical devices that do not require battery backup protection.

❺	**Circuit breaker**	Use to reset the system after an overload or short circuit.
❻	**AC Power Cable**	Connect the Back-UPS to utility power.
❼	**Battery Backup outlets with Surge Protection**	During a power outage or other utility problems, these outlets provide power from the Back-UPS battery. Connect critical equipment such as desktop computer, computer monitor, modem or other data sensitive devices to these outlets.
❽	**Master outlet**	Connect the master device to this outlet, in most scenarios, this will be the main computer.
❾	**External battery pack connector**	Connect an external battery pack to provide additional battery backup runtime.
❿	**Telephone/ Network Ports**	Connect a telephone, FAX, router or modem to the appropriate In or Out port.

Operation

Power-Saving function



To conserve electricity, configure the Back-UPS to recognize a Master device, such as a desktop computer or an A/V receiver, and Controlled peripheral devices, such as a printer, speakers, or a scanner. When the Master device goes into Sleep or Standby mode, or is switched OFF, the Controlled device(s) will be switched off as well, saving electricity.

Notes: Devices that provide network services (such as routers, modems, or wireless printers) should not be plugged into the Controlled outlets. The Back-UPS Pro ships with this Power-Saving feature DISABLED. If you wish to use this feature, follow the instructions below:

Enable the power-saving function. Press and hold MUTE and DISPLAY simultaneously for two seconds. The Back-UPS will beep to indicate that the feature is enabled. The leaf icon on the display will illuminate.

Disable the power-saving function. Press and hold MUTE and DISPLAY simultaneously for two seconds. The Back-UPS will beep to indicate that the feature is disabled. The leaf icon on the display will clear out.

Setting the threshold. The amount of power used by a device in Sleep or Standby mode varies between devices. It may be necessary to adjust the threshold at which the Master outlet signals the Controlled outlets to shut down.

1. Ensure a master device is connected to the Master outlet. Put that device into Sleep or Standby mode, or turn it OFF.
2. Press DISPLAY and MUTE simultaneously and hold for six seconds, until the leaf icon flashes three times and the Back-UPS beeps three times.
3. The Back-UPS will now recognize the threshold level of the Master device and save it as the new threshold setting.

Power-Saving display

The display interface can be configured to be continuously illuminated, or to save energy, it can be configured to clear out after a period of inactivity.

1. Full Time Mode: Press and hold DISPLAY for two seconds. The display will illuminate and the Back-UPS will beep to confirm the Full-Time mode.
2. Power-Saving Mode: Press and hold DISPLAY for two seconds. The display will go dark and the Back-UPS will beep to confirm the Power-Saving mode. While in Power-Saving Mode, the display will illuminate if a button is pressed, it then goes dark after 60 seconds of no activity.

Unit sensitivity

In situations where the Back-UPS or connected equipment appears too sensitive to input voltage, it may be necessary to adjust the transfer voltage. Adjust the sensitivity of the Back-UPS to control when it will switch to battery power; the higher the sensitivity, the more often the Back-UPS will switch to battery power.

1. Ensure that the Back-UPS is Off but connected to utility power.
2. Press and hold the POWER button for six seconds. The LOAD CAPACITY bar will flash on and off, indicating that the Back-UPS is in programming mode.
3. Press POWER again to rotate through the menu options. Stop at selected sensitivity. The Back-UPS will beep to confirm the selection.

Generator Sensitivity	**Default**	**Sensitive Loads**
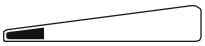		
Low sensitivity	Medium sensitivity (Default)	High sensitivity
150-300 Vac	170-294 Vac	170-288 Vac
Input voltage is extremely low or high. Not recommended for computers.	*The Back-UPS frequently switches to battery power.*	*The connected equipment is sensitive to voltage fluctuations.*

Front panel buttons and display interface

Use the three buttons on the front panel of the Back-UPS and the display interface to configure the Back-UPS.

Front panel

1. MUTE button
2. POWER ON/OFF button
3. DISPLAY button
4. Display interface

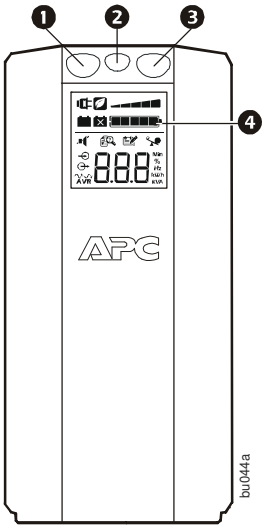

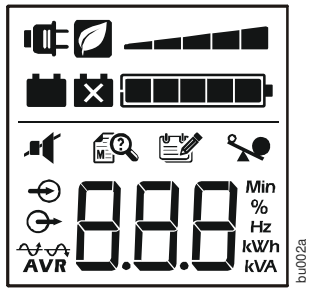

	**On Line—**The Back-UPS is supplying conditioned utility power to connected equipment
	**Power-Saving—**Master and Controlled outlets are enabled, saving power when the master device goes into sleep or standby mode
	**Load Capacity—**The load is indicated by the number of sections illuminated, one to five. Each bar represents 20% of the load.
	**Battery Charge—**The battery charge level is indicated by the number of sections illuminated. When all five blocks are illuminated, the Back-UPS is at full charge. When one block is filled, the Back-UPS is near the end of its battery capacity, the indicator will flash and the Back-UPS will beep continuously.
	**Overload—**The power demand from the load has exceeded the capacity of the Back-UPS.
	**Event—**The event counter shows the number of events that occurred that caused the Back-UPS to switch to on-battery operation.

	**Automatic Voltage Regulation**—The Back-UPS can compensate for high or low input voltage.  When illuminated, the Back-UPS is compensating for low input voltage.  When illuminated, the Back-UPS is compensating for high input voltage.
	Input voltage. Output voltage.
	**System Faults—**The system has a fault. The fault number will illuminate on the display interface. See “System faults” on page 8.
	**Mute—**If the line through the speaker icon is illuminated, the audible alarm has been turned off.
	**Replace Battery—**The battery is not connected or is nearing the end of its useful life. Replace the battery.
	**On Battery—**The Back-UPS is supplying battery backup power to the connected equipment, it will beep four times every 30 seconds.

Warnings and System Faults

Audible warnings

Four Beeps Every 30 Seconds	Back-UPS is running on battery. You should consider saving any work in progress.
Continuous Beeping	Low battery condition and battery run-time is very low. Promptly save any work in progress, exit all open applications, and shut down the operating system.
Continuous tone	Battery Backup outputs are overloaded.
Chirps for 1 Minute every 5 hours	Battery fails the automatic diagnostic test and should be replaced.

Warning icons

If these icons are illuminated...	This may be the problem.
	The Back-UPS is operating on utility power, but is overloaded. Disconnect one of the devices connected to the Back-UPS. If the Overload icon stops flashing, the Back-UPS is no longer overloaded and will continue to operate normally.
	The Back-UPS is operating on battery power, but is overloaded. Disconnect one of the devices connected to the Back-UPS. If the Overload icon stops flashing, the Back-UPS is no longer overloaded and will continue to operate normally.
	The Back-UPS is operating on utility power, but the battery is not functioning properly. Contact APC Customer Support to order a replacement battery.
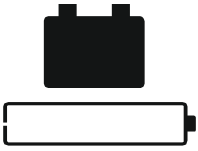	The Back-UPS is operating on battery power and the battery power is getting low. Shut down all connected equipment to avoid losing any unsaved data. When possible, connect the Back-UPS to utility power to recharge the battery.

System faults

The Back-UPS will display these fault messages.



bu088a

F01	On-Battery Overload	Turn the Back-UPS off. Disconnect non-essential equipment from the Battery Backup outlets and then turn Back-UPS on.
F02	On-Battery Output Short	Turn the Back-UPS off. Disconnect non-essential equipment from the Battery Backup outlets and then turn Back-UPS on.
F03	On-Battery Xcap Overload	Faults F03-F09 cannot be corrected by the user, contact APC Customer Support for assistance.
F04	Clamp Short	
F05	Charge Fault	
F06	Relay Welding	
F07	Temperature	
F08	Fan Fault	
F09	Internal Fault	

Function Button Quick-Reference

Function	Button	Timing (seconds)	UPS Status	Description
Power				
Power On		0.2	Off	Press POWER to start receiving input utility power. If input utility power is not available, the Back-UPS will run on battery power.
Power Off		2	On	The Back-UPS is not receiving input utility power, but is providing surge protection.
Display				
Status Inquiry		0.2	On	Verify the status or condition of the Back-UPS. The LCD will illuminate for 60 seconds.
Full-Time/ Power-Saving modes		2	On	The LCD will illuminate and the Back-UPS will beep to confirm the Full-Time mode. The LCD will not illuminate and the Back-UPS will beep to confirm the Power-Saving mode. While in Power-Saving Mode, the LCD will illuminate if a button is pressed. It turns off after 60 seconds of inactivity.
Mute				
Event Specific		0.2	On	Disable any audible alarms caused by an event.
General Status Enable/ Disable		2	On	Enable or disable the audible alarms. The Mute icon will illuminate and the Back-UPS will beep one time. The Mute function will not activate unless the Back-UPS is operating on battery power.

Function	Button	Timing (seconds)	UPS Status	Description
Sensitivity		6	Off	The Load Capacity icon will blink, indicating that the Back-UPS is in program mode. Use the POWER button to scroll through Low, Medium, and High, stop at selected sensitivity. The Back-UPS will beep to confirm selection. See Configuration for details.
Master/ Controlled outlet Enable/ Disable		2	On	The leaf icon will not illuminate indicating that the Master Outlet feature is disabled, or illuminate to indicate the Master Outlet feature is enabled. The Back-UPS will beep once.
Master/ Enable Threshold Calibration		6	On	While calibrating the threshold setting, the device connected to the Master Outlet should be turned off or placed in Standby or Sleep mode. Upon completion, Power-Saving icon will flash 3 times and beep 3 times.
Self-Test (manual)		6	On	The Back-UPS will perform a test of the internal battery. Note: This will happen automatically when the Back-UPS is turned ON.
Event Reset		0.2	On	When the Event screen is visible, press and hold DISPLAY, then press POWER, to clear the utility failure event counter.
Fault Reset		2	Fault	After a fault has been identified, press POWER to remove the visual indication and return to standby status.

Troubleshooting

Problem	Possible Cause	Corrective Action
Back-UPS will not switch on.	The Back-UPS is not connected to utility power.	Ensure that the Back-UPS is securely connected to an utility power outlet.
	The circuit breaker has been tripped.	Disconnect non-essential equipment from the Back-UPS. Reset the circuit breaker. Re-connect equipment one item at a time. If the circuit breaker is tripped again, disconnect the device that caused the trip.
	The internal battery is not connected.	Connect the battery.
	The utility input voltage is out of range.	Adjust the transfer voltage and sensitivity range.
The Back-UPS does not provide power during a utility power outage.	Ensure that essential equipment is **not** plugged into a SURGE ONLY outlet.	Disconnect equipment from the SURGE ONLY outlet and re-connect to a Battery Backup outlet.
The Back-UPS is operating on battery power, while connected to utility power.	The plug has partially pulled out of the wall outlet, the wall outlet is no longer receiving utility power, or the circuit breaker has been tripped.	Ensure that the plug is fully inserted into the wall outlet. Ensure that the wall outlet is receiving utility power by checking it with another device.
	The Back-UPS is performing an automatic self test.	No action is necessary.
	The utility input voltage is out of range, the frequency is out of range, or the waveform is distorted.	Adjust the transfer voltage and sensitivity range.
The Back-UPS does not provide the expected amount of backup time.	Battery Backup outlets may be fully or improperly loaded.	Disconnect non-essential equipment from the Battery Backup outlets and connect the equipment to SURGE ONLY outlets.
	The battery was recently discharged due to a power outage and has not fully recharged.	Charge the battery cartridge for 16 hours.
	The battery has reached the end of its useful life.	Replace the battery.
The OVERLOAD indicator is illuminated.	The equipment connected to the Back-UPS is drawing more power than the Back-UPS can provide.	Disconnect non-essential equipment from the Battery Backup outlets and connect the equipment to SURGE ONLY outlets.
The REPLACE BATTERY indicator is illuminated.	The battery has reached the end of its useful life.	Replace the battery.

Problem	Possible Cause	Corrective Action
The SYSTEM FAULT indicator is illuminated, all the front panel indicators are flashing.	There is an internal fault.	Determine which internal fault message is displayed by matching the number displayed on the LCD with the corresponding Fault Message (see System Faults) and contact APC Customer Support.
Power is not supplied to some outlets.	Power to the Controlled outlets has intentionally been turned off.	Confirm that the correct peripherals are connected to Controlled outlets. If this feature is not desired, disable the Power-Saving Master and Controlled outlets.
The Controlled outlets are not supplying power, even though the Master device is not in sleep mode.	The Master Outlet threshold may be incorrectly set.	Adjust the threshold when the Master outlet signals the Controlled outlets to shut down.

Service

If the unit requires service, do not return it to the dealer. Follow these steps:

1. Review the *Troubleshooting* section of the manual to eliminate common problems.
2. If the problem persists, contact APC Customer Support.
   a. Note the model number and serial number and the date of purchase. The model and serial numbers are located on the rear panel of the unit and are available through the LCD display on select models.
   b. Call APC Customer Support and a technician will attempt to solve the problem over the phone. If this is not possible, the technician will issue a Service Request Number.
   c. If the unit is under warranty, the repairs are free.
3. An Authorised Service Representative will visit your location and try to resolve the issue.

APC Customer Support India

Internet	http://www.apc.com/support
Toll Free BSNL network	1 800 425 4272
All other networks	city code + 39022272
E-mail	indiainfo@apc.com

© 2011 APC by Schneider Electric. APC, the APC logo, and Back-UPS are owned by Schneider Electric Industries S.A.S., American Power Conversion Corporation, or their affiliated companies. All other trademarks are property of their respective owners.

990-3994C
11/2011