# User Guide



# HP OfficeJet Pro 8740



# HP OfficeJet Pro 8740 All-in-One series

User Guide

**Copyright information**

© 2016 HP Development Company, L.P.

Edition 1, 4/2016

**HP Company notices**

The information contained in this document is subject to change without notice.

All rights reserved. Reproduction, adaptation, or translation of this material is prohibited without prior written permission of HP, except as allowed under copyright laws.

The only warranties for HP products and services are set forth in the express warranty statements accompanying such products and services. Nothing herein should be construed as constituting an additional warranty. HP shall not be liable for technical or editorial errors or omissions contained herein.

**Acknowledgements**

Microsoft and Windows are either registered trademarks or trademarks of Microsoft Corporation in the United States and/or other countries.

ENERGY STAR and the ENERGY STAR mark are registered trademarks owned by the U.S. Environmental Protection Agency.

Mac, OS X, and AirPrint are trademarks of Apple Inc., registered in the U.S. and other countries.

**Safety information**



Always follow basic safety precautions when using this product to reduce risk of injury from fire or electric shock.

1. Read and understand all instructions in the documentation that comes with the printer.

2. Observe all warnings and instructions marked on the product.

3. Unplug this product from wall outlets before cleaning.

4. Do not install or use this product near water, or when you are wet.

5. Install the product securely on a stable surface.

6. Install the product in a protected location where no one can step on or trip over the line cord, and the line cord cannot be damaged.

7. If the product does not operate normally, see Solve a problem.

8. There are no user-serviceable parts inside. Refer servicing to qualified service personnel.

# Table of contents


**1 How do I? ..... 1**

**2 Get started ..... 2**

Accessibility ..... 2

HP EcoSolutions (HP and the Environment) ..... 3

Manage power ..... 3

Quiet Mode ..... 4

Optimize Printing Supplies ..... 5

Understand the printer parts ..... 5

Top and front view ..... 5

Printing supplies area ..... 6

Back view ..... 6

Use the printer control panel ..... 7

Overview of buttons and lights ..... 7

Control panel display icons ..... 8

Function tabs ..... 8

Change printer settings ..... 9

Use shortcuts ..... 9

Dashboard ..... 10

HP Digital Solutions ..... 10

What are HP Digital Solutions? ..... 10

HP Digital Filing ..... 10

HP Digital Fax ..... 10

Requirements ..... 10

Set up HP Digital Solutions ..... 12

Set up HP Digital Filing ..... 12

Set up Scan to Network Folder ..... 12

Set up Scan to Email ..... 13

Set up HP Digital Fax ..... 15

Use the HP Digital Solutions ..... 15

Use HP Scan to Network Folder ..... 15

Use Scan to Email ..... 16

Use HP Digital Fax ..... 16

Near Field Communication (NFC) ..... 16

Paper basics ..... 16

Recommended papers for printing ..... 17

Order HP paper supplies ..... 18
Tips for selecting and using paper ..... 18
Load paper ..... 19
Load an original on the scanner glass ..... 25
Load an original in the document feeder ..... 26
Set up and use accessories ..... 27
Install and use Tray 2 ..... 27
Work with trays ..... 27
Update the printer ..... 28
Open the HP printer software (Windows) ..... 29
Turn the printer off ..... 30

**3 Print ..... 31**
Print documents ..... 31
Print brochures ..... 32
Print on envelopes ..... 33
Print photos ..... 34
Print on special and custom-size paper ..... 35
Print on both sides (duplexing) ..... 37
Print from mobile device ..... 37
Print with AirPrint™ ..... 38
Tips for successful printing ..... 38

**4 Copy and scan ..... 41**
Copy ..... 41
Scan ..... 41
Scan to a computer ..... 42
Scan to a memory device ..... 43
Scan to email ..... 43
Scan to email through Scan tab ..... 43
Set up Scan to Email ..... 43
Scan a document or photo to email ..... 44
Scan to email through Scan-to-Email app ..... 44
Set up Scan to Email ..... 44
Scan a document or photo to email ..... 45
Change account settings ..... 46
Scan using Webscan ..... 46
Scanning documents as editable text ..... 47
Scan documents as editable text ..... 47
Guidelines for scanning documents as editable text ..... 48
Create a new scan shortcut (Windows) ..... 48

Change scan settings (Windows) ..... 49
Tips for copy and scan success ..... 50

**5 Fax ..... 51**
Send a fax ..... 51
Send a standard fax ..... 51
Send a standard fax from the computer ..... 52
Send a fax from a phone ..... 52
Send a fax using monitor dialing ..... 53
Send a fax using printer memory ..... 53
Send a fax to multiple recipients ..... 54
Send a fax in Error Correction Mode ..... 54
Receive a fax ..... 55
Receive a fax manually ..... 55
Set up backup fax ..... 56
Reprint received faxes from memory ..... 56
Forward faxes to another number ..... 57
Set automatic reduction for incoming faxes ..... 57
Block unwanted fax numbers ..... 58
Receive faxes using HP Digital Fax ..... 59
Set up phone book contacts ..... 59
Create and edit a phone book contact ..... 60
Create and edit a group phone book contact ..... 61
Delete phone book contacts ..... 61
Print a list of phone book contacts ..... 62
Change fax settings ..... 62
Configure the fax header ..... 62
Set the answer mode (Auto answer) ..... 63
Set the number of rings before answering ..... 63
Change the answer ring pattern for distinctive ring ..... 63
Set the dial type ..... 64
Set the redial options ..... 64
Set the fax speed ..... 65
Set the fax sound volume ..... 65
Fax and digital phone services ..... 66
Fax on Voice over Internet Protocol ..... 66
Use reports ..... 67
Print fax confirmation reports ..... 67
Print fax error reports ..... 68
Print and view the fax log ..... 68
Clear the fax log ..... 68

Print the details of the last fax transaction ..... 69
Print a Caller ID Report ..... 69
View the Call History ..... 69
Additional fax setup ..... 69
Set up faxing (parallel phone systems) ..... 70
Select the correct fax setup for your home or office ..... 71
Case A: Separate fax line (no voice calls received) ..... 72
Case B: Set up the printer with DSL ..... 73
Case C: Set up the printer with a PBX phone system or an ISDN line ..... 74
Case D: Fax with a distinctive ring service on the same line ..... 75
Case E: Shared voice/fax line ..... 76
Case F: Shared voice/fax line with voice mail ..... 77
Case G: Fax line shared with computer modem (no voice calls received) ..... 78
Set up the printer with a computer dial-up modem ..... 79
Set up the printer with a computer DSL/ADSL modem ..... 80
Case H: Shared voice/fax line with computer modem ..... 81
Shared voice/fax with computer dial-up modem ..... 81
Shared voice/fax with computer DSL/ADSL modem ..... 83
Case I: Shared voice/fax line with answering machine ..... 84
Case J: Shared voice/fax line with computer modem and answering machine ..... 85
Shared voice/fax line with computer dial-up modem and answering machine ..... 86
Shared voice/fax line with computer DSL/ADSL modem and answering machine ..... 88
Case K: Shared voice/fax line with computer dial-up modem and voice mail ..... 89
Serial-type fax setup ..... 91
Test fax setup ..... 91

**6 Web Services ..... 93**
What are Web Services? ..... 93
Set up Web Services ..... 93
Use Web Services ..... 95
HP ePrint ..... 95
Print apps ..... 96
Remove Web Services ..... 96

**7 Work with cartridges ..... 97**
Information on cartridges and the printhead ..... 97
Some color ink is used even when printing with black cartridge only ..... 98
Check the estimated ink levels ..... 98
Replace the cartridges ..... 98

Order ink cartridges ..... 100
Store printing supplies ..... 100
Anonymous usage information storage ..... 100
Cartridge warranty information ..... 101

**8 Network setup ..... 102**
Set up the printer for wireless communication ..... 102
Before you begin ..... 102
Set up the printer on your wireless network ..... 103
Change the connection type ..... 103
Test the wireless connection ..... 104
Turn on or off the wireless capability of the printer ..... 104
Change network settings ..... 104
Use Wi-Fi Direct ..... 106

**9 Printer management tools ..... 109**
Toolbox (Windows) ..... 109
HP Utility (OS X) ..... 109
Embedded web server ..... 109
About cookies ..... 110
Open the embedded web server ..... 110
Embedded web server cannot be opened ..... 111
Restrict Color ..... 112
HP Web Jetadmin software ..... 112

**10 Solve a problem ..... 113**
Jams and paper-feed issues ..... 113
Clear a paper jam ..... 113
Read general instructions in the Help for clearing paper jams ..... 113
Clear a print carriage jam ..... 119
Read general instructions in the Help for clearing a print carriage jams ..... 119
Learn how to avoid paper jams ..... 119
Solve paper-feed problems ..... 120
Printing issues ..... 121
Fix problems with page not printing (unable to print) ..... 121
Read general instructions in the Help for unable to print issues ..... 121
Fix print quality issues ..... 125
Read general instructions in the Help for resolving print quality issues ..... 125
Copy issues ..... 128
Scan issues ..... 128

Fax issues ..... 129
Run the fax test ..... 129
What to do if the fax test failed ..... 129
Troubleshoot fax problems ..... 134
Read general instructions in the Help for specific fax problems ..... 134
The display always shows Phone Off Hook ..... 134
The printer is having problems sending and receiving faxes ..... 134
The printer cannot receive faxes, but can send faxes ..... 136
The printer cannot send faxes, but can receive faxes ..... 137
Fax tones are recorded on my answering machine ..... 137
The computer cannot receive faxes (HP Digital Fax) ..... 137
Network and connection issues ..... 138
Fix wireless connection ..... 138
Find network settings for wireless connection ..... 138
Fix Wi-Fi Direct connection ..... 138
Fix Ethernet connection ..... 139
Printer hardware issues ..... 139
Get help from the printer control panel ..... 140
Understand printer reports ..... 140
Printer status report ..... 140
Network configuration page ..... 141
Print quality report ..... 141
Wireless test report ..... 141
Web access test report ..... 141
Solve problems using Web Services ..... 141
Maintain the printer ..... 142
Clean the scanner glass ..... 142
Clean the exterior ..... 143
Clean the document feeder ..... 143
Maintain the printhead and cartridges ..... 144
Restore original factory defaults and settings ..... 145
HP support ..... 146

**Appendix A Technical information ..... 148**

Specifications ..... 148
Regulatory information ..... 150
Regulatory Model Number ..... 151
FCC statement ..... 152
Notice to users in Korea ..... 152
VCCI (Class B) compliance statement for users in Japan ..... 153
Notice to users in Japan about the power cord ..... 153

Noise emission statement for Germany ..... 153
Visual display workplaces statement for Germany ..... 153
Notice to users of the U.S. telephone network: FCC requirements ..... 154
Notice to users of the Canadian telephone network ..... 155
Notice to users of the German telephone network ..... 155
Australia wired fax statement ..... 155
European Union Regulatory Notice ..... 156
Products with wireless functionality ..... 156
European telephone network declaration (Modem/Fax) ..... 156
Declaration of conformity ..... 157
Regulatory information for wireless products ..... 158
Exposure to radio frequency radiation ..... 158
Notice to users in Brazil ..... 158
Notice to users in Canada ..... 159
Notice to users in Taiwan ..... 159
Notice to users in Mexico ..... 160
Notice to users in Japan ..... 160
Notice to users in Korea ..... 160
Environmental product stewardship program ..... 160
Eco-Tips ..... 161
European Union Commission Regulation 1275/2008 ..... 161
Paper ..... 161
Plastics ..... 161
Material safety data sheets ..... 161
Recycling program ..... 161
HP inkjet supplies recycling program ..... 161
Power consumption ..... 162
Disposal of waste equipment by users ..... 162
Chemical substances ..... 162
Restriction of hazardous substance (Ukraine) ..... 162
Restriction of hazardous substance (India) ..... 162
China SEPA Eco Label User Information ..... 163
China Energy Label for Printer, Fax and Copier ..... 163
The Table of Hazardous Substances/Elements and their Content (China) ..... 164
EPEAT ..... 164
Battery disposal in Taiwan ..... 164
California Perchlorate Material Notice ..... 165
EU Battery Directive ..... 166
Battery notice for Brazil ..... 167

Printhead problem ..... 168

Cartridge problem ..... 169
Replace the cartridge ..... 169
Paper mismatch ..... 169
Cartridge carriage stalled ..... 169
Paper jam ..... 169
Out of paper ..... 170
Document failed to print ..... 170
Printer failure ..... 170
Door or cover open ..... 170
Cartridges depleted ..... 170
Cartridge failure ..... 171
Printer supply upgrade problem ..... 171
Non-HP cartridges installed ..... 171
Use SETUP cartridges ..... 171
Do not use SETUP cartridges ..... 171
Not enough ink at startup ..... 171
Incompatible HP Instant Ink cartridge ..... 171
Ink sensor failure ..... 172
Ink sensor warning ..... 172
Problem with ink system ..... 172
Incompatible cartridges ..... 172
Please Connect Printer to HP Connected ..... 172

**Index ..... 173**

# 1 How do I?

- Get started
- Print
- Copy and scan
- Fax
- Web Services
- Work with cartridges
- Solve a problem

# 2 Get started

This guide provides details about how to use the printer and how to resolve problems.


- Accessibility
- HP EcoSolutions (HP and the Environment)
- Understand the printer parts
- Use the printer control panel
- HP Digital Solutions
- Near Field Communication (NFC)
- Paper basics
- Load paper
- Load an original on the scanner glass
- Load an original in the document feeder
- Set up and use accessories
- Update the printer
- Open the HP printer software (Windows)
- Turn the printer off


## Accessibility

The printer provides a number of features that make it accessible for people with disabilities.

**Visual**

The HP software provided with the printer is accessible for users with visual impairments or low vision by using your operating system's accessibility options and features. The software also supports most assistive technology such as screen readers, Braille readers, and voice-to-text applications. For users who are color blind, colored buttons and tabs used in the HP software have simple text or icon labels that convey the appropriate action.

**Mobility**

For users with mobility impairments, the HP software functions can be executed through keyboard commands. The HP software also supports Windows accessibility options such as StickyKeys, ToggleKeys, FilterKeys, and MouseKeys. The printer doors, buttons, paper trays, and paper-width guides can be operated by users with limited strength and reach.

**Support**

For more information about accessibility solutions for HP products, visit the HP Accessibility and Aging website (www.hp.com/accessibility).

For accessibility information for OS X, visit the Apple website at www.apple.com/accessibility.

# HP EcoSolutions (HP and the Environment)

HP is committed to helping you optimize your environmental footprint and empowering you to print responsibly—at home or in the office.

For more detailed information about environmental guidelines that HP follows during the manufacturing process, see Environmental product stewardship program. For more information about HP's environmental initiatives, visit www.hp.com/ecosolutions.

- Manage power
- Quiet Mode
- Optimize Printing Supplies

## Manage power

Use **Sleep Mode** and **Schedule Printer On/Off** to conserve electricity.

### Sleep mode

Power usage is reduced while in Sleep mode. After initial setup of printer, the printer will enter Sleep mode after five minutes of inactivity.

Use the following instructions to change the period of inactivity before the printer sleeps.

1. From the printer control panel, touch or swipe down the tab at the top of the screen to open the Dashboard, touch .
2. Touch **Sleep Mode**, and then touch the desired option.

### Schedule On and Off

Use this feature to automatically turn the printer on or off on selected days. For example, you can schedule the printer to turn on at 8 a.m. and turn off at 8 p.m. from Monday to Friday. In this way, you save energy during the night and weekends.

Use the following instructions to schedule the day and time for On and Off.

1. From the printer control panel, touch or swipe down the tab at the top of the screen to open the Dashboard, touch .
2. Touch **Schedule Printer On/Off**.
3. Touch the desired option, and follow the onscreen messages to set the day and time to turn the printer off and on.

**CAUTION:** Always turn the printer off properly, using either **Schedule Off** or (the Power button) located on the front left side of the printer.

If you improperly turn the printer off, the print carriage might not return to the correct position, causing problems with the cartridges and print quality issues.

Never turn off the printer when cartridges are missing. HP recommends that you replace any missing cartridges as soon as possible to avoid print quality issues, possible extra ink usage from the remaining cartridges, or damage to the ink system.

## Quiet Mode

Quiet Mode slows down printing to reduce overall noise without affecting print quality. It only works when printing on plain paper. Additionally, Quiet Mode is disabled if you are printing using the best or presentation print quality. To reduce printing noise, turn on Quiet Mode. To print at normal speed, turn Quiet Mode off. Quiet Mode is off by default.

**NOTE:** Quiet Mode does not work if you print photos or envelopes.

You can create a schedule by selecting the time when the printer prints in Quiet Mode. For example, you can schedule the printer to be in Quiet Mode from 10 p.m. to 8 a.m. everyday.

### To turn on Quiet Mode from the printer control panel

1. From the printer control panel, touch or swipe down the tab at the top of the screen to open the Dashboard, and then touch  ( **Setup** ).
2. Touch **Quiet Mode** .
3. Touch **Off** next to **Quiet Mode** to turn it on.

### To create a schedule for Quiet Mode from the printer control panel

1. From the printer control panel, touch or swipe down the tab at the top of the screen to open the Dashboard, and then touch  ( **Setup** ).
2. Touch **Quiet Mode** .
3. Touch **Off** next to **Quiet Mode** to turn it on.
4. Touch **Off** next to **Schedule**, and then change the start time and end time of the schedule.

### To turn on Quiet Mode while the printer is printing

1. From the printer control panel, touch or swipe down the tab at the top of the screen to open the Dashboard, and then select the current print job in progress.
2. On the printing screen, touch  (Quiet Mode) to turn it on.

**NOTE:** Quiet Mode turns on after a moment and is only active for the current print job.

### To turn Quiet Mode on or off from the printer software (Windows)

1. Open the HP printer software. For more information, see Open the HP printer software (Windows).
2. Click **Quiet Mode** .
3. Select **On** or **Off** .
4. Click **Save Settings**.

### To turn Quiet Mode on or off from the printer software (OS X)

1. Open HP Utility. For more information, see HP Utility (OS X).
2. Select the printer.
3. Click **Quiet Mode** .

4. Select **On** or **Off** .
5. Click **Apply Now**.

**To turn Quiet Mode on or off from the Embedded Web Server (EWS)**

1. Open the EWS. For more information, see Open the embedded web server.
2. Click the **Settings** tab.
3. In the **Preferences** section, select **Quiet Mode** , and then select **On** or **Off** .
4. Click **Apply**.

## Optimize Printing Supplies

To optimize printing supplies such as ink and paper, try the following:

- Recycle used original HP ink cartridges through HP Planet Partners. For more information, visit www.hp.com/recycle.
- Optimize paper usage by printing on both sides of the paper.
- Change the print quality in the printer driver to a draft setting. The draft setting uses less ink.
- Do not clean the printhead unnecessarily. Doing so wastes ink and shortens the life of the cartridges.

# Understand the printer parts

This section contains the following topics:

- Top and front view
- Printing supplies area
- Back view

## Top and front view

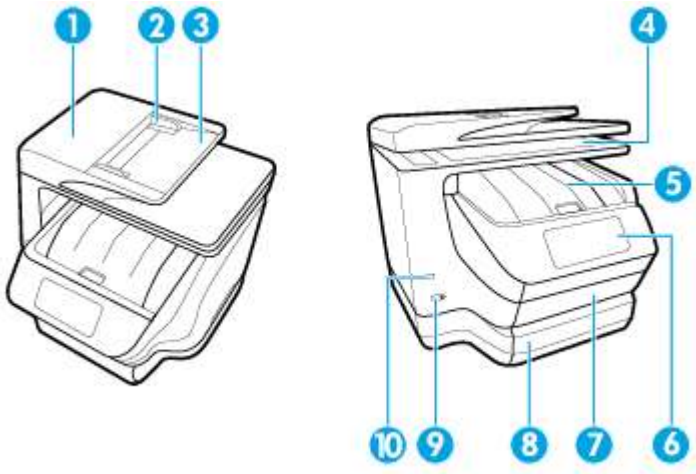


| | |
|---|---|
| 1 | Document feeder |
| 2 | Document feeder paper-width guides |
| 3 | Document feeder tray |

| | |
|---|---|
| 4 | Scanner glass |
| 5 | Cartridge access door / Output tray |
| 6 | Control panel display |
| 7 | Input tray / Tray 1 |
| 8 | Input tray / Tray 2 (an accessory available with some models of the printer) |
| 9 | Power button |
| 10 | Front USB port |

## Printing supplies area

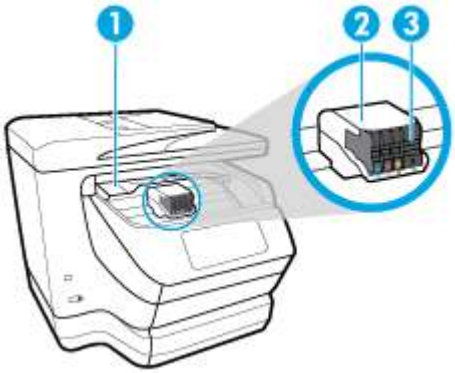


| | |
|---|---|
| 1 | Cartridge access door |
| 2 | Printhead |
| 3 | Cartridges |

**NOTE:** Cartridges should be kept in the printer to prevent possible print quality issues or printhead damage. Avoid removing supplies for extended periods of time. Do not turn the printer off when a cartridge is missing.

## Back view

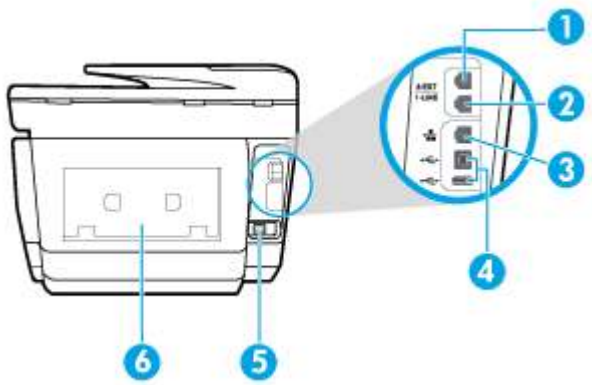


| | |
|---|---|
| 1 | Fax port (2-EXT) |

| | |
|---|---|
| 2 | Fax port (1-LINE) |
| 3 | Ethernet network port |
| 4 | Rear USB ports |
| 5 | Power input |
| 6 | Rear access panel |

# Use the printer control panel

This section contains the following topics:

- Overview of buttons and lights
- Control panel display icons
- Function tabs
- Change printer settings
- Use shortcuts
- Dashboard

## Overview of buttons and lights

The following diagram and related table provide a quick reference to the printer control panel features.

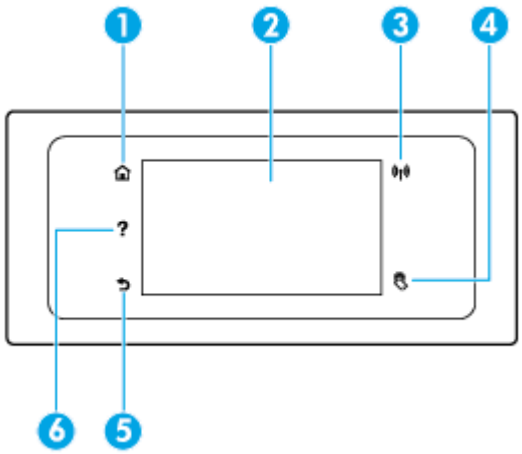


| Label | Name and Description |
|---|---|
| **1** | Home button: Returns to the home screen from any other screen. |
| **2** | Control panel display: Touch the screen to select menu options, or scroll through the menu items. For information about the icons that appear on the display, see Control panel display icons. |
| **3** | Wireless light: Indicates the status of the printer's wireless connection.<br>• Solid blue light indicates that wireless connection has been established and you can print.<br>• Blinking light indicates wireless error. Refer to the message on the printer display.<br>• If the wireless light is off, wireless is turned off. |

| Label | Name and Description |
|---|---|
| 4 | Near Field Communication: With Near Field Communication (NFC), you can quickly get your mobile device (such as a smartphone or tablet) connected to the printer by touching the device to the printer so that a print job can be sent. To use this feature, your mobile device needs to support NFC. |
| 5 | Back button: Returns to the previous menu. |
| 6 | Help button: Opens the Help menu when on the Home screen, or shows contextual help content if it is available for the current operation when on other screens. |

## Control panel display icons

To access the icons, touch or swipe down the tab at the top of a screen to open the Dashboard, and then touch the icon.

| Icon | Purpose |
|---|---|
|  | **Setup**: Displays the setup screen for changing preferences, network setup, Wi-Fi Direct, Web Services setup, fax setup, and other maintenance settings and generating reports. |
|  | **Wireless**: Displays wireless status and menu options. For more information, see Set up the printer for wireless communication.<br>**NOTE:**  (Ethernet) and  (Wireless) will not be displayed at the same time. Showing the Ethernet icon or the wireless icon depends on the way your printer is connected to the network. If the network connection of the printer has not been set up, then the printer control panel display shows  (Wireless) by default. |
|  | **HP ePrint**: Displays the **Web Services Summary** menu, where you can check ePrint status details, change ePrint settings, or view the printer email address. For more information, see **HP ePrint** . |
|  | **Wi-Fi Direct**: Displays the status, name, and password for Wi-Fi Direct, and the number of devices connected. You can also change settings and print a guide. |
|  | **Ink**: Displays the estimated ink levels.<br>**NOTE:** Ink level warnings and indicators provide estimates for planning purposes only. When you receive a low-ink warning message, consider having a replacement cartridge available to avoid possible printing delays. You do not need to replace cartridges until the print quality becomes unacceptable. |
|  | **Fax Status**: Displays status information for the Auto Answer function, fax logs, and the fax sound volume. |
|  | **HP EcoSolutions**: Displays a screen where you can configure some of the printer's environmental features. |

## Function tabs

Function tabs are located at the bottom of the screen.

| Function tab | Purpose |
|---|---|
|  (Shortcuts) | Access to shortcuts you have created. |

| Function tab | Purpose |
|---|---|
| **Copy** | Copy document, or ID card. |
| **Scan** | Scan document or photo to email, USB flash drive, network folder, or computer. |
| **Print** | Print photo or document from USB flash drive, or manage print jobs. |
| **Fax** | Set up fax, send fax, or reprint received fax. |
| **Apps** | Access to the apps for your printer. |

## Change printer settings

Use the control panel to change the printer function and settings, print reports, or get help for the printer.

**TIP:** If the printer is connected to a computer, you can also change the printer settings using the printer management tools in computer.

For more information about these tools, see Printer management tools.

### To change settings for a function

The Home screen of the control panel display shows the available functions for the printer.

1. From the control panel display, select a function tab, touch and slide your finger across the screen, and then touch the icon to select the desired function.
2. After selecting a function, touch ( **Settings** ), scroll through the available settings, and then touch the setting you want to change.
3. Follow the prompts on the control panel display to change the settings.

**TIP:** Touch (Home) to return to the Home screen.

### To change the printer settings

To change the printer settings or print reports, use the options available on the **Setup** menu.

1. From the printer control panel, touch or swipe down the tab at the top of the screen to open the Dashboard, and then touch ( **Setup** ).
2. Touch and scroll through the screens.
3. Touch the screen items to select screens or options.

**TIP:** Touch (Home) to return to the Home screen.

## Use shortcuts

Using shortcuts on the printer control panel, you can create a collection of the tasks frequently used from all features available in the function folders.

Once shortcuts are created, you can access to them on the Home screen or through the Shortcuts tab.

## Dashboard

The Dashboard on the printer control panel lets you access the icons on the display, check the status of the printer, or monitor and manage current and scheduled printer tasks.

To open the Dashboard, touch or swipe down the tab  at the top of a screen on the control panel.

# HP Digital Solutions

The printer includes a collection of digital solutions that can help you simplify and streamline your work. These digital solutions include the following:

- HP Digital Filing (including Scan to Network Folder and Scan to Email)
- HP Digital Fax (including Fax to Network Folder and Fax to Email)

This section contains the following topics:


- What are HP Digital Solutions?
- Requirements
- Set up HP Digital Solutions
- Use the HP Digital Solutions


## What are HP Digital Solutions?

HP Digital Solutions are a set of tools provided with this printer that can help improve your office productivity.

This section contains the following topics:


- HP Digital Filing
- HP Digital Fax


### HP Digital Filing

HP Digital Filing provides robust, general-office scanning—as well as basic, versatile, document-management capabilities—for multiple users over a network. With HP Digital Filing, you can simply walk up to the printer, select the options on the printer control panel, and either scan documents directly to computer folders on your network or quickly share them with business partners as email attachments—and all without using additional scanning software.

Scanned documents can be sent to a shared network folder for personal or group access or to one or more email addresses for quick sharing. In addition, you can configure specific scan settings for each scan destination, allowing you to make sure that the best settings are being used for each specific task.

### HP Digital Fax

With HP Digital Fax, you can save incoming, black-and-white faxes to a computer folder on your network for easy sharing and storage, or you can forward faxes through email—allowing you to receive important faxes from anywhere while working away from the office.

In addition, you can turn off fax printing altogether — saving money on paper and ink, as well as helping to reduce paper consumption and waste.

## Requirements

Before you set up the HP Digital Solutions, make sure you have the following:

**For all HP Digital Solutions**

- **A network connection**

  Connect the printer using either a wireless connection or an Ethernet cable.

**NOTE:** If the printer is connected using a USB cable, you scan documents to a computer or attach scans to an email message using the HP software. For more information, see Scan. You can receive faxes to your computer using HP Digital Fax. For more information, see Receive faxes using HP Digital Fax.

- **The HP software**

  HP recommends that you set up HP Digital Solutions using the HP software provided with the printer.

**TIP:** If you would like to set up HP Digital Solutions without installing the HP software, you can use the printer's embedded web server.

**For Scan to Network Folder, Fax to Network Folder**

- **An active network connection.** You must be connected to the network.
- **An existing Windows (SMB) shared folder**

  For information about finding the computer name, see the documentation for your operating system.
- **The network address for the folder**

  On computer running Windows, network addresses are usually written in this format: `\\mypc\sharedfolder`
- **The name of the computer where the folder is located**

  For information about finding the computer name, see the documentation for your operating system.
- **Appropriate privileges on the shared folder**

  You must have write access to the folder.
- **A username and password for the shared folder (if necessary)**

  For example, the Windows or OS X username and password used to log onto the network.

**NOTE:** HP Digital Filing does not support Active Directory.

**For Scan to Email, Fax to Email**

- A valid email address
- Outgoing SMTP server information
- An active Internet connection

If you are setting up Scan to Email or Fax to Email on a computer running Windows, the setup wizard can automatically detect the email settings for the following email applications:

- Microsoft Outlook 2007–2016 (Windows XP, Windows Vista, and Windows 7, Windows 8/8.1, Windows 10)
- Outlook Express (Windows XP)
- Windows Mail (Windows Vista)
- Qualcomm Eudora (version 7.0 and above) (Windows XP and Windows Vista)
- Netscape (version 7.0) (Windows XP)

However, if your email application is not listed above, you can still set up and use Scan to Email and Fax to Email if your email application meets the requirements listed in this section.

## Set up HP Digital Solutions

You can set up HP Digital Solutions using the HP software provided with the printer—either using software wizards that you can open from the HP printer software (Windows) or HP Utility (OS X).

**TIP:** You can also use the printer's embedded web server (EWS) to set up the HP Digital Solutions. For more information about using the EWS, see Embedded web server.

**NOTE:** If you are using the printer in an IPv6-only network environment, you must set up the digital solutions using the EWS.

This section contains the following topics:

- Set up HP Digital Filing
- Set up HP Digital Fax

### Set up HP Digital Filing

To set up HP Digital Filing, follow the appropriate instructions.

**NOTE:** You can also use these steps to change settings in the future.

This section contains the following topics:

- Set up Scan to Network Folder
- Set up Scan to Email

#### Set up Scan to Network Folder

You can configure up to 10 destination folders for each printer.

**NOTE:** To use Scan to Network Folder, you must have created and configured the folder you are using on a computer connected to the network. You cannot create a folder from the printer's control panel. Also, make sure the folder preferences are set to provide read and write access. For more information about creating folders on the network and setting folder preferences, see the documentation for your operating system.

After you finish setting up Scan to Network Folder, the HP software automatically saves the configurations to the printer.

##### To set up Scan to Network Folder from the printer software (Windows)

1. Open the HP printer software. For more information, see Open the HP printer software (Windows).
2. Click **Scan** under **Print, Scan & Fax** , and then click **Scan to Network Folder Wizard**.
3. Follow the onscreen instructions.

**NOTE:** After you have created destination folders, you can use the printer's embedded web server (EWS) to customize the scan settings for these folders. On the last screen of the Scan to Network Folder Wizard, make sure the **Launch embedded web server when finished** check box is selected. When you click **Finish**, the EWS is displayed in your computer's default web browser. For more information about EWS, see Embedded web server.

**To set up Scan to Network Folder from the printer software (OS X)**

1. Open HP Utility. For more information, see HP Utility (OS X).
2. Click **Scan to Network Folder** under the **Scan Settings** section, and then follow the onscreen instructions.

**NOTE:** You can customize the scan settings for each destination folder.

**To set up Scan to Network Folder from Embedded web server (EWS)**

1. Open the embedded web server (EWS). For more information, see Open the embedded web server.
2. On the **Home** tab, click **Network Folder Setup** in the **Setup** box.
3. Click **New**, and then follow the onscreen instructions.

**NOTE:** You can customize the scan settings for each destination folder.

4. After you have entered the required information about the network folder, click **Save and Test** to make sure the link to the network folder is working correctly. The entry is added to the **Network Folder** list.

**Set up Scan to Email**

You can use the printer to scan documents and send them to one or more email addresses as attachments—without additional scanning software. You do not need to scan files from your computer and attach them to email messages.

**Set the Outgoing Email Profiles**

Configure the email address that will appear in the FROM portion of the email message sent by the printer. You can add up to 10 Outgoing Email Profiles. You can use the HP software installed on your computer to create these profiles.

**Add email addresses to the Email Address Book**

Manage the list of people to whom you can send email messages from the printer. You can add up to 15 email addresses with their corresponding contact names. You can also create email groups. To add email addresses, you can use the printer's embedded web server (EWS) or the printer's control panel.

**Configure other email options**

You can configure default SUBJECT and body text that is included in all email messages sent from the printer. To configure these options, you can use the printer's EWS or the printer's control panel.

**Step 1: Set up the outgoing email profiles**

To set up the outgoing email profile used by the printer, complete the following steps for your operating system.

**To set up the outgoing email profile from the printer software (Windows)**

1. Open the HP printer software. For more information, see Open the HP printer software (Windows).
2. Click **Print, Scan & Fax** , and then click **Scan** .
3. Click **Scan to E-mail Wizard**.
4. Click **New**, and then follow the onscreen instructions.

**NOTE:** After you have set the Outgoing Email Profile, you can use the printer's embedded web server (EWS) to add more Outgoing Email Profiles, add email addresses to the Email Address Book, and configure other email options. To open the EWS automatically, select the **Launch embedded web server when finished** checkbox on the last screen of the Scan to Email Wizard. When you click **Finish**, the EWS is displayed in your computer's default web browser. For more information about EWS, see Embedded web server.

**To set up the outgoing email profile from the printer software (OS X)**

1. Open HP Utility. For more information, see HP Utility (OS X).
2. Click **Scan to Email** under the **Scan Settings** section.
3. Follow the onscreen instructions.
4. After you have entered the required information about the network folder, click **Save and Test** to make sure the link to the network folder is working correctly. The entry is added to the **Outgoing Email Profiles** list.

**To set up the outgoing email profile from Embedded web server (EWS)**

1. Open the embedded web server (EWS). For more information, see Embedded web server.
2. On the **Home** tab, click **Outgoing Email Profiles** in the **Setup** box.
3. Click **New**, and then follow the onscreen instructions.
4. After you have entered the required information about the network folder, click **Save and Test** to make sure the link to the network folder is working correctly. The entry is added to the **Outgoing Email Profile List**.

**Step 2: Add email addresses to the Email Address Book**

1. Open the embedded web server (EWS). For more information, see Embedded web server.
2. On the **Scan** tab, click **Email Address Book**.
3. Click **New** to add a single email address.

   -Or-

   Click **Group** to create an email distribution list.

   **NOTE:** Before you can create an email distribution list, you must have already added at least one email address to the Email Address Book.
4. Follow the onscreen instructions. The entry is added to the **Email Address Book**.

   **NOTE:** Contact names appear on the printer's control panel display and in your email application.

**Step 3: Configure other email options**

To configure other email options (such as configuring default SUBJECT and body text that is included in all email messages sent from the printer, as well as scan settings used when sending email from the printer), complete the following steps:

1. Open the embedded web server (EWS). For more information, see Embedded web server.
2. On the **Scan** tab, click **Email Options**.
3. Change any settings, and then click **Apply**.

### Set up HP Digital Fax

With HP Digital Fax, the printer automatically receives faxes and saves them directly to a network folder (Fax to Network Folder) or forwards them as email attachments (Fax to Email).

**NOTE:** You can configure HP Digital Fax to use either Fax to Network Folder or to use Fax to Email. You cannot use both at the same time.

Received faxes are saved as TIFF (Tagged Image File Format) or PDF files.

**NOTE:** HP Digital Fax supports receiving black-and-white faxes only. Color faxes are printed instead of being saved.

#### To set up HP Digital Fax from the printer software (Windows)

1. Open the HP printer software. For more information, see Open the HP printer software (Windows).
2. Click **Print, Scan & Fax** , and then click **Fax**.
3. Click **Digital Fax Setup**.
4. Follow the onscreen instructions.

**NOTE:** After you have set up HP Digital Fax, you can use the printer's embedded web server (EWS) to edit HP Digital Fax settings. To open the EWS automatically, select the **Launch embedded web server when finished** checkbox on the last screen of the Digital Fax Setup Wizard. When you click **Finish**, the EWS is displayed in your computer's default web browser. For more information about the EWS, see Embedded web server.

#### To set up HP Digital Fax from the printer software (OS X)

1. Open HP Utility. For more information, see HP Utility (OS X).
2. Click **Digital Fax Archive**.
3. Follow the onscreen instructions.
4. After you have entered the required information, click **Save and Test** to make sure the link to the network folder is working correctly.

#### To set up HP Digital Fax from Embedded web server (EWS)

1. Open the embedded web server (EWS). For more information, see Embedded web server.
2. On the **Home** tab, click **Fax to Email/Network Folder** in the **Setup** box.
3. Follow the onscreen instructions.
4. After you have entered the required information, click **Save and Test** to make sure the link to the network folder is working correctly.

## Use the HP Digital Solutions

To use the HP Digital Solutions available with the printer, follow the appropriate instructions.

### Use HP Scan to Network Folder

1. Load your original print-side down on the scanner glass or print-side up in the document feeder. For more information, see Load an original on the scanner glass or Load an original in the document feeder.
2. Touch **Scan** , and then touch **Network Folder**.
3. On the control panel display, select the name that corresponds to the folder you want to use.

4. If prompted, enter the PIN.
5. Change any scan settings, and then touch **Start Scan**.

**NOTE:** The connection might take some time, depending on network traffic and connection speed.

### Use Scan to Email

1. Load your original print-side down on the scanner glass or print-side up in the document feeder. For more information, see Load an original on the scanner glass or Load an original in the document feeder.
2. Touch **Scan**, and then touch **Email**.
3. On the control panel display, select the name that corresponds to the Outgoing Email Profile you want to use.
4. If prompted, enter the PIN.
5. Select the TO email address (the email recipient) or enter an email address.
6. Enter or change the SUBJECT for the email message.
7. Change any scan settings, and then touch **Start Scan**.

**NOTE:** The connection might take some time, depending on network traffic and connection speed.

### Use HP Digital Fax

After you set up HP Digital Fax, any black-and-white faxes that you receive print, by default, and then are saved to the designated destination—either the network folder or email address that you have specified.

- If you are using Fax to Network Folder, this process happens in the background. HP Digital Fax does not notify you when faxes are saved to the network folder.
- If you are using Fax to Email and if your email application is set to notify you when new email messages arrive in your inbox, you can see when new faxes arrive.

## Near Field Communication (NFC)

With Near Field Communication (NFC), you can send print job from a NFC-enabled mobile device (such as a smartphone or tablet) to the printer. Look for on the printer control panel, and then touch your mobile device to this area to print.

For more information about supported mobile devices and capabilities, visit the HP Mobile Printing website at www.hp.com/go/mobileprinting . If a local version of this website is not available in your country/region or language, you might be directed to the HP Mobile Printing website in another country/region or language.

To use this feature, make sure your mobile device supports NFC.

## Paper basics

The printer is designed to work well with most types of office paper. It is best to test a variety of print paper types before buying large quantities. Use HP paper for optimum print quality. Visit the HP website at www.hp.com for more information about HP paper.

HP recommends plain papers with the ColorLok logo for printing everyday documents. All papers with the ColorLok logo are independently tested to meet high standards of reliability and print quality, and produce documents with crisp, vivid color, bolder blacks, and that dry faster than ordinary plain papers. Look for papers with the ColorLok logo in a variety of weights and sizes from major paper manufacturers.

This section contains the following topics:


- Recommended papers for printing
- Order HP paper supplies
- Tips for selecting and using paper


## Recommended papers for printing

If you want the best print quality, HP recommends using HP papers that are specifically designed for the type of project you are printing.

Depending on your country/region, some of these papers might not be available.

### Photo printing

- **HP Premium Plus Photo Paper**

  HP Premium Plus Photo Paper is HP's highest-quality photo paper for your best photos. With HP Premium Plus Photo Paper, you can print beautiful photos that are instant-dry so you can share them right off the printer. The printer supports several sizes, including A4, 8.5 x 11 inches, 4 x 6 inches (10 x 15 cm), and 5 x 7 inches (13 x 18 cm) in two finishes - glossy or soft gloss (semi-gloss). Ideal for framing, displaying, or gifting your best photos and special photo projects. HP Premium Plus Photo Paper delivers exceptional results with professional quality and durability.

- **HP Advanced Photo Paper**

  This glossy photo paper features an instant-dry finish for easy handling without smudging. It resists water, smears, fingerprints, and humidity. Your prints have a look and feel comparable to a store-processed photo. It is available in several sizes, including A4, 8.5 x 11 inches, 10 x 15 cm (4 x 6 inches), 13 x 18 cm (5 x 7 inches). It is acid-free for longer lasting documents.

- **HP Everyday Photo Paper**

  Print colorful, everyday snapshots at a low cost, using paper designed for casual photo printing. This affordable photo paper dries quickly for easy handling. Get sharp, crisp images when you use this paper with any inkjet printer. It is available in glossy finish in several sizes, including A4, 8.5 x 11 inches, 5 x 7 inches and 4 x 6 inches (10 x 15 cm). It is acid-free for longer lasting documents.

**Business documents**

- **HP Premium Presentation Paper 120g Matte or HP Professional Paper 120 Matt**

  This paper is a heavy two-sided matte paper perfect for presentation, proposals, reports, and newsletters. It is heavyweight for an impressive look and feel.

- **HP Brochure Paper 180g Glossy** or **HP Professional Paper 180 Glossy**

  These papers are glossy-coated on both sides for two-sided use. They are the perfect choice for near-photographic reproductions and business graphics for report covers, special presentations, brochures, mailers, and calendars.

- **HP Brochure Paper 180g Matte** or **HP Professional Paper 180 Matt**

  These papers are matte-coated on both sides for two-sided use. They are the perfect choice for near-photographic reproductions and business graphics for report covers, special presentations, brochures, mailers, and calendars.

**Everyday printing**

All the papers listed for everyday printing feature ColorLok Technology for less smearing, bolder blacks, and vivid colors.

- **HP Bright White Inkjet Paper**

  HP Bright White Inkjet Paper delivers high-contrast colors and sharp text. It is opaque enough for two-sided color usage with no show-through, which makes it ideal for newsletters, reports, and flyers.

- **HP Printing Paper**

  HP Printing Paper is a high-quality multifunction paper. It produces documents that look and feel more substantial than documents printed on standard multipurpose or copy paper. It is acid-free for longer lasting documents.

- **HP Office Paper**

  HP Office Paper is a high-quality multifunction paper. It is suitable for copies, drafts, memos, and other everyday documents. It is acid-free for longer lasting documents.

## Order HP paper supplies

The printer is designed to work well with most types of office paper. Use HP paper for optimum print quality.

To order HP papers and other supplies, go to www.hp.com . At this time, some portions of the HP website are available in English only.

HP recommends plain papers with the ColorLok logo for printing and copying of everyday documents. All papers with the ColorLok logo are independently tested to meet high standards of reliability and print quality, and produce documents with crisp, vivid color, bolder blacks and shorter dry-time than ordinary plain papers. Look for papers with the ColorLok logo in a variety of weights and sizes from major paper manufacturers.

## Tips for selecting and using paper

For the best results, observe the following guidelines.

- Load only one type and one size of paper at a time into a tray or document feeder.
- Make sure the paper is loaded correctly when loading from the input tray or document feeder.

- Do not overload the tray or document feeder.
- To prevent jams, poor print quality, and other printing problems, avoid loading the following paper in the tray or document feeder:
  - Multipart forms
  - Media that is damaged, curled, or wrinkled
  - Media with cutouts or perforations
  - Media that is heavily textured, embossed, or does not accept ink well
  - Media that is too lightweight or stretches easily
  - Media that contains staples or clips

# Load paper

**To load standard paper**

1. Pull out the input tray completely.

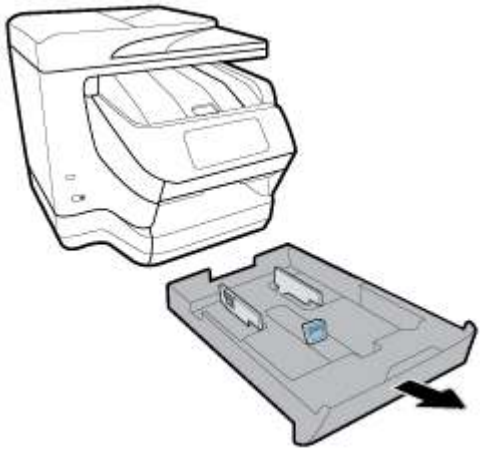

2. Slide the paper guides towards the edges of the tray as far as possible.
   - To slide the paper-width guides, press the button on the left paper-width guide and slide the guide at the same time.
   - To slide the paper-length guide, press the button on the paper-length guide and slide the guide at the same time.

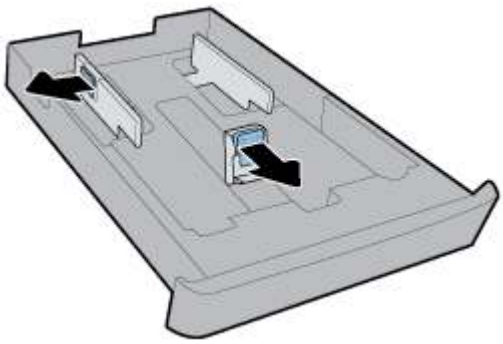

3. Insert the paper in portrait orientation and with the side to be printed facing down.

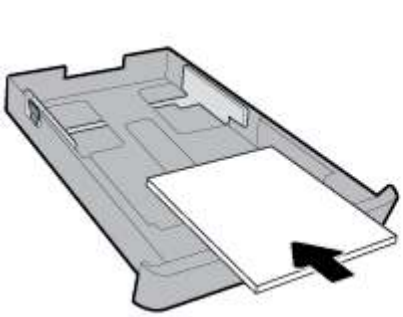

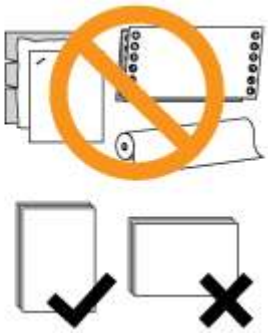

Make sure the stack of paper is aligned with the appropriate paper size lines on the front of the tray. In addition, make sure the stack of paper does not exceed the stack height marking on the right edge of the tray.

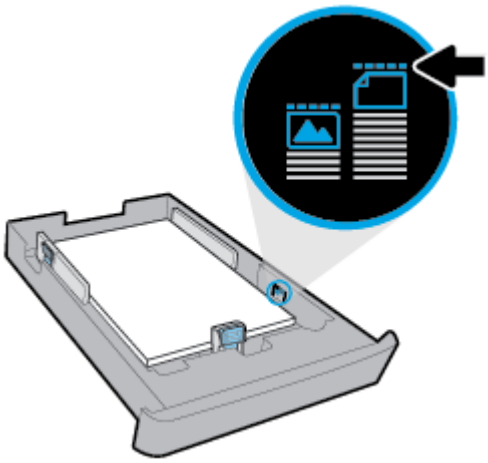

**NOTE:** Do not load paper while the printer is printing.

4. Adjust the paper-width guides and the paper-length guide until they touch the edge of the stack of paper.

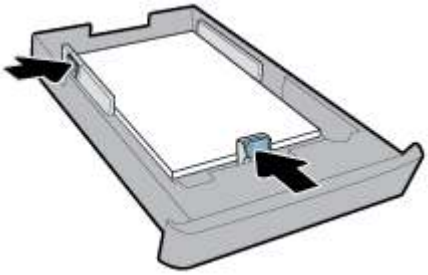

5. Check the input tray area underneath the printer. If there is paper, remove the paper.
6. Reinsert the input tray into the printer.

**To load an envelope**

1. Pull out the input tray completely.
2. If there is other paper in the input tray, remove the paper.

3. Insert the envelopes print-side down in portrait orientation according to the graphic below. Make sure the stack of envelopes is inserted as far inside as possible to touch the back edge of the tray.

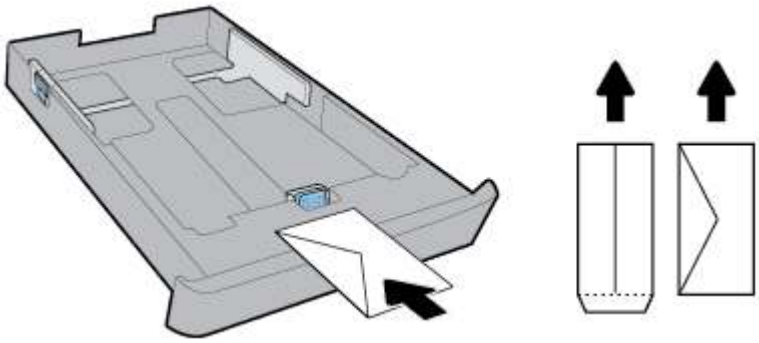

**NOTE:** Do not load envelopes while the printer is printing.

4. Adjust the paper-width guides until they touch the edge of the stack of envelopes.

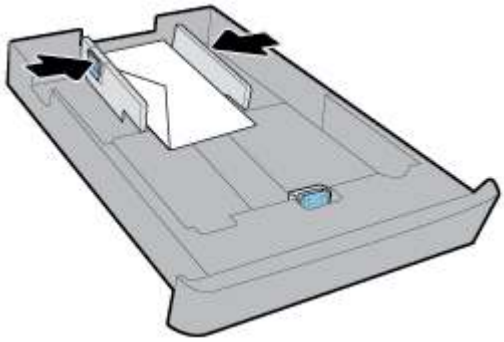

5. Make sure the stack of envelopes does not exceed the stack height marking on the left paper-width guide.

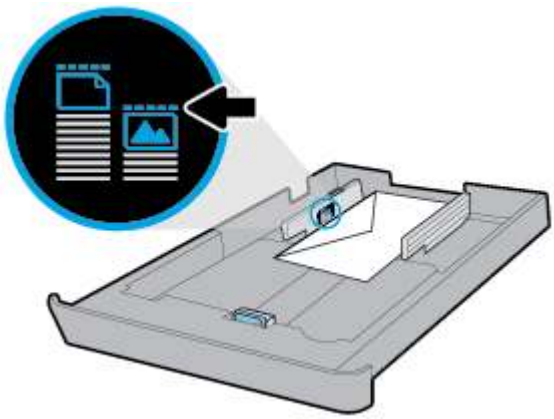

6. Adjust the paper-length guide until it touches the edge of the stack of envelopes.

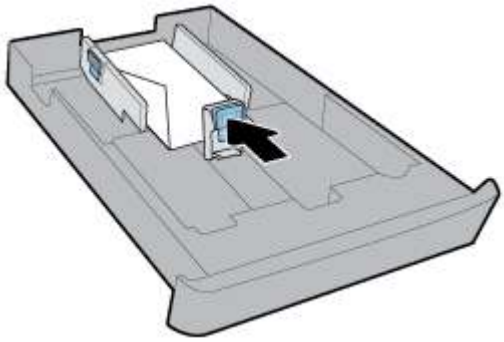

7. Check the input tray area underneath the printer. If there is paper, remove the paper.
8. Reinsert the input tray into the printer.

**To load cards and photo paper**

1. Pull out the input tray completely.
2. If there is other paper in the input tray, remove the paper.
3. Insert the cards or photo paper print-side down in portrait orientation. Make sure the stack of paper is inserted as far inside as possible to touch the back edge of the tray.



**NOTE:** Do not load paper while the printer is printing.

4. Adjust the paper-width guides until they touch the edge of the stack of paper.

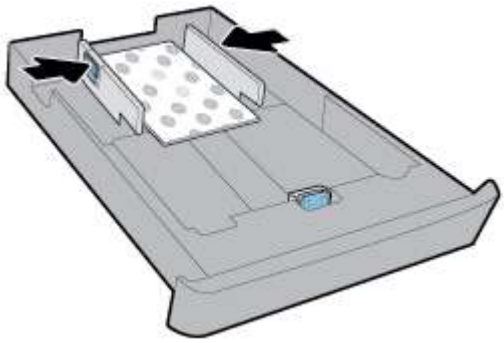

5. Make sure the stack of paper does not exceed the stack height marking on the left paper-width guide.

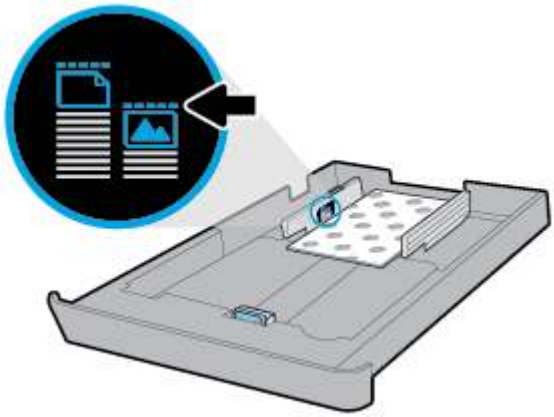

6. Adjust the paper-length guide until it touches the edge of the stack of paper.

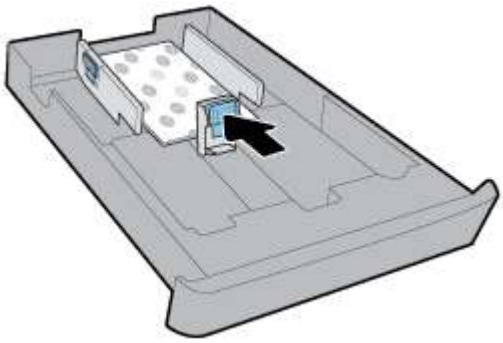

7. Check the input tray area underneath the printer. If there is paper, remove the paper.
8. Reinsert the input tray into the printer.

### To load paper in Tray 2

**NOTE:** Tray 2 supports only plain paper in A4, Letter, or Legal size.

To learn how to set up and use Tray 2, see Set up and use accessories.

1. Pull out Tray 2 completely from the printer.
2. Slide the paper guides towards the edges of the tray as far as possible.
   - To slide the paper-width guides, press the button on the left paper-width guide and slide the guide at the same time.
   - To slide the paper-length guide, press the button on the paper-length guide and slide the guide at the same time.

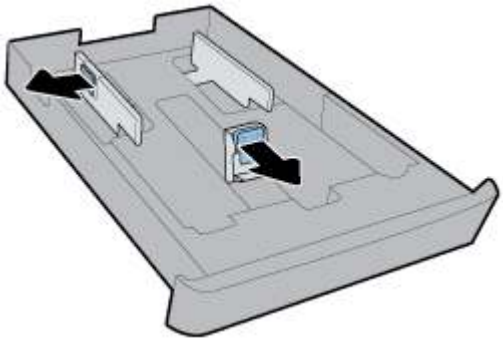

3. Insert the paper in portrait orientation and with the side to be printed facing down.

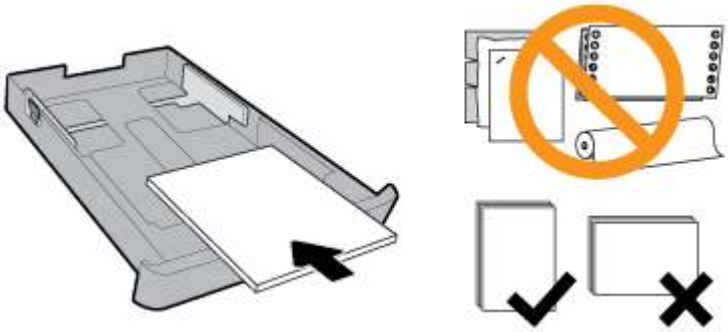

Make sure the stack of paper is aligned with the appropriate paper size lines on the front of the tray. In addition, make sure the stack of paper does not exceed the stack height marking on the right edge of the tray.

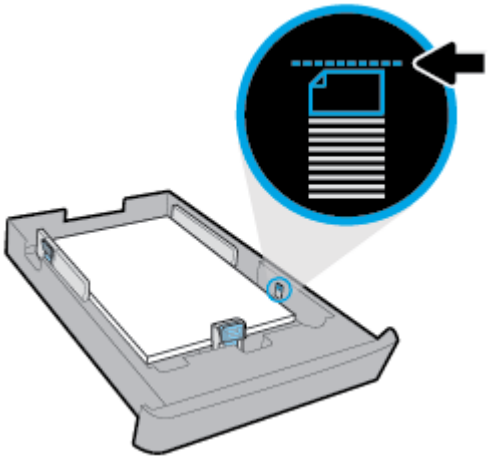

**NOTE:** Do not load paper while the printer is printing.

4. Adjust the paper-width guides and the paper-length guide until they touch the edge of the stack of paper.

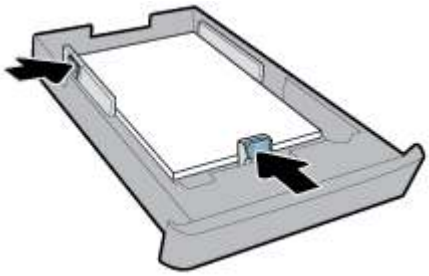

5. Check the Tray 2 area underneath the printer. If there is paper, remove the paper.
6. Reinsert Tray 2 into the printer.

# Load an original on the scanner glass

You can copy, scan, or fax originals by loading them on the scanner glass.

**NOTE:** Many of the special features do not work correctly if the scanner glass and lid backing are not clean. For more information, see Maintain the printer.

**NOTE:** Remove all originals from the document feeder tray before lifting the lid on the printer.

### To load an original on the scanner glass

1. Lift the scanner lid.



2. Load your original print-side down as shown in the following illustration.

**TIP:** For more help on loading an original, refer to the engraved guides along the edge of the scanner glass.

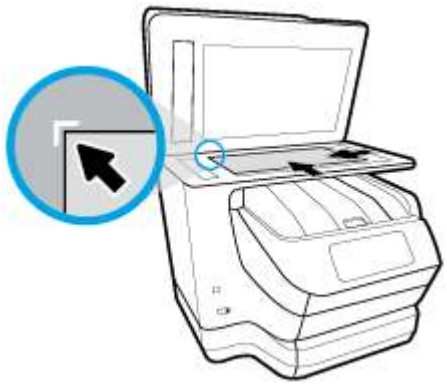

3. Close the lid.

# Load an original in the document feeder

You can copy, scan, or fax a document by placing it in the document feeder.

**CAUTION:** Do not load photos in the document feeder; this might cause damage to your photos. Use only paper that is supported by the document feeder.

**NOTE:** Some features, such as the **Fit to Page** copy feature, do not work when you load your originals in the document feeder. For those features to work, load your originals on the scanner glass.

### To load an original in the document feeder

1. Load your original print-side up into the document feeder.
   a. If you are loading an original printed in portrait orientation, place the pages so that the top edge of the document goes in first. If you are loading an original printed in landscape orientation, place the pages so that the left edge of the document goes in first.
   b. Slide the paper into the document feeder until you hear a tone or see a message on the printer control panel display indicating that the loaded pages were detected.

**TIP:** For more help on loading originals in the document feeder, refer to the diagram on the document feeder tray.



2. Slide the paper-width guides inward until they stop at the left and right edges of the paper.

# Set up and use accessories

If you want to install and set up accessories (such as a second tray), see the following sections.

When using more than one tray, you can make use of the tray features provided to achieve a better experience.

## Install and use Tray 2

### To install Tray 2

1. Unpack the tray, remove the packing tapes and materials, and move the tray to the prepared location.

   The surface must be sturdy and level.

2. Turn off the printer and unplug the power cord from the electrical socket.

3. Set the printer on top of the tray.

   **CAUTION:** Be careful to keep your fingers and hands clear of the bottom of the printer.

4. Connect the power cord and turn on the printer.

## Work with trays

By default, the printer draws paper from Tray 1. If Tray 1 is empty and Tray 2 is installed and contains paper, the printer draws paper from Tray 2.

You can change the behaviors using the following features:

- **Default Tray:** Set the default tray from which the printer draws paper first when paper of the same size is loaded in both Tray 1 and Tray 2.
- **Tray Lock:** Lock a tray to prevent it from accidental use; for example, when you have loaded special paper (such as letterhead or preprinted paper).

  The printer will not use a locked tray even when the other tray is empty.

**NOTE:** For better experience, load only one type of paper in a tray.

**NOTE:** Tray 2 supports only plain paper.

| To achieve this | Follow these steps |
| --- | --- |

| | |
|---|---|
| Have paper loaded in both trays and use paper from one tray if the other tray is empty. | • Load paper in both trays. For more information, see Load paper.<br>• Turn off tray lock. |
| Have paper loaded in both trays and use paper from one of the trays first. | • Load paper of the same size in both trays.<br>• Set the desired tray as the default tray. |
| Be able to choose from plain paper and another paper type that you use occasionally.<br>**NOTE:** For better experience, load only one type of paper in a tray. | • Load special paper in main input tray and plain paper in Tray 2.<br>• Lock the main input tray and set Tray 2 as the default tray. |

**To change tray settings**

**NOTE:** You can also change the tray settings from the HP printer software or EWS.

To access EWS and the printer software, see Embedded web server and Open the HP printer software (Windows).

1. Make sure the printer is turned on.
2. From the printer control panel, touch or swipe down the tab at the top of the screen to open the Dashboard, and then touch (Setup).
3. Scroll through the screen and touch **Tray and Paper Management**, select **Default Tray** or **Tray Lock**, and then select the appropriate option.

**To turn on automatic selection of tray or paper source (Windows)**

1. Open the HP printer software. For more information, see Open the HP printer software (Windows).
2. Click **Set Preferences** under **Print, Scan & Fax** .
3. In the **Printing preferences** dialog box, click the **Printing Shortcuts** tab.
4. From the **Paper Source** drop-down list, select one of the auto selection options.
5. Click **OK** twice to close the dialog box and accept changes.

**To turn on automatic selection of tray or paper source (OS X)**

1. From the **File** menu in your software, choose **Print**.
2. Make sure your printer is selected.
3. Select **Automatically Select** from the **Source** drop-down list.
4. Click **Show Details** to access the print options.

# Update the printer

By default, if the printer is connected to a network and Web Services has been enabled, the printer automatically checks for updates.

**To update the printer using the printer control panel**

1. From the top of the screen, touch or swipe down the tab to open the Dashboard, touch ( **Setup** )
2. Touch **Printer Maintenance** .
3. Touch **Update the Printer** .

**To enable the printer to automatically check for updates**

**NOTE:** The default setting of **Auto Update** is **On** .

1. From the printer control panel, touch or swipe down the tab at the top of the screen to open the Dashboard, touch ( **HP ePrint** ).
2. Touch **OK** .
3. Touch **Settings** , and then touch **Update the Printer** .
4. Touch **Auto Update** and then touch **On** .

**To update the printer using the embedded web server**

1. Open the EWS.

   For more information, see Embedded web server.
2. Click the **Tools** tab.
3. In the **Printer Updates** section, click **Firmware Updates**, and then follow the onscreen instructions.

**NOTE:** If a printer update is available, the printer downloads and installs the update, and then restarts.

**NOTE:** If prompted for proxy settings and if your network uses proxy settings, follow the onscreen instructions to set up a proxy server. If you do not have the details, contact your network administrator or the person who set up the network.

# Open the HP printer software (Windows)

After installing the HP printer software, depending on your operating system, do one of the following.

- **Windows 10**: From the computer desktop, click the Start button, click **All apps**, select **HP**, and then select the icon with the printer name.
- **Windows 8.1**: Click the down arrow in lower left corner of the **Start** screen, and then select the icon with the printer name.
- **Windows 8**: On the **Start** screen, right-click an empty area on the screen, click **All Apps** on the app bar, and then select the icon with the printer name.
- **Windows 7**, **Windows Vista**, and **Windows XP**: From the computer desktop, click the Start button, select **All Programs**, select **HP**, select the folder for the printer, and then select the icon with the printer name.

# Turn the printer off

Turn the printer off by pressing  (the Power button) located on the printer. Wait until the power light turns off before unplugging the power cord or turning off a power strip. Any other different method of turning off the printer is not correct.

**CAUTION:** If you incorrectly turn the printer off, the print carriage might not return to the correct position, causing problems with the cartridges and print quality issues.

# 3 Print

Most print settings are automatically handled by the software application. Change the settings manually only when you want to change print quality, print on specific types of paper, or use special features.

**TIP:** This printer includes **HP ePrint** , a free service from HP that allows you to print documents on your HP ePrint-enabled printer anytime, from any location, without any additional software or printer drivers. For more information, see **HP ePrint** .

**TIP:** You can use this printer to print documents and photos on your mobile device (such as a smartphone or tablet). For more information, visit the HP Mobile Printing website at www.hp.com/go/mobileprinting. If a local version of this website is not available in your country/region or language, you might be directed to the HP Mobile Printing website in another country/region or language.

- Print documents
- Print brochures
- Print on envelopes
- Print photos
- Print on special and custom-size paper
- Print on both sides (duplexing)
- Print from mobile device
- Print with AirPrint™
- Tips for successful printing

## Print documents

### To print documents (Windows)

1. Load paper in the input tray. For more information, see Load paper.
2. From your software, select **Print**.
3. Make sure your printer is selected.
4. Click the button that opens the **Properties** dialog box.

   Depending on your software application, this button might be called **Properties**, **Options**, **Printer Setup**, **Printer Properties**, **Printer**, or **Preferences**.

   **NOTE:** To set print settings for all print jobs, make the changes in the HP software provided with the printer. For more information on the HP software, see Printer management tools.
5. Select the appropriate options on the **Printing Shortcuts** tab.

   To change other print settings, click the other tabs.

   For more printing tips, see Tips for successful printing.

**NOTE:** If you change the paper size, be sure to load the correct paper in the input tray and set the paper size on the printer control panel.

6. Click **OK** to close the **Properties** dialog box.
7. Click **Print** or **OK** to begin printing.

### To print documents (OS X)

1. From the **File** menu in your software, choose **Print**.
2. Make sure your printer is selected.
3. Set the print options.

   If you do not see options on the Print dialog, click **Show Details**.

   - Choose the appropriate paper size in the **Paper Size** pop-up menu.

     **NOTE:** If you change the paper size, ensure that you have loaded the correct paper.

   - Select the orientation.
   - Enter the scaling percentage.
4. Click **Print**.

# Print brochures

### To print brochures (Windows)

1. Load paper in the input tray. For more information, see Load paper.
2. On the **File** menu in your software application, click **Print** .
3. Make sure your printer is selected.
4. To change settings, click the button that opens the **Properties** dialog box.

   Depending on your software application, this button might be called **Properties** , **Options** , **Printer Setup** , **Printer** , or **Preferences** .

**NOTE:** To set print settings for all print jobs, make the changes in the HP software provided with the printer. For more information on the HP software, see Printer management tools.

5. Select the appropriate options on the **Printing Shortcuts** tab.

   To change other print settings, click the other tabs.

   For more printing tips, see Tips for successful printing.

**NOTE:** If you change the paper size, be sure to load the correct paper in the input tray and set the paper size on the printer control panel.

6. Click **OK** to close the **Properties** dialog box.
7. Click **Print** or **OK** to begin printing.

### To print brochures (OS X)

1. From the **File** menu in your software, choose **Print**.
2. Make sure your printer is selected.

3. Set the print options.

   If you do not see options on the Print dialog, click **Show Details**.

   a. Choose the appropriate paper size in the **Paper Size** pop-up menu.

   **NOTE:** If you change the paper size, ensure that you have loaded the correct paper.

   b. From the pop-up menu, choose **Paper Type/Quality**, and then choose the option that provides the best quality or maximum dpi.

4. Click **Print**.

# Print on envelopes

Avoid envelopes with the following characteristics:

- Very slick finish
- Self-stick adhesives, clasps, or windows
- Thick, irregular, or curled edges
- Areas that are wrinkled, torn, or otherwise damaged

Make sure the folds of envelopes you load in the printer are sharply creased.

**NOTE:** For more information about printing on envelopes, see the documentation available with the software program you are using.

**To print envelopes (Windows)**

1. Load paper in the input tray. For more information, see Load paper.
2. On the **File** menu in your software, click **Print**.
3. Make sure your printer is selected.
4. Click the button that opens the **Properties** dialog box.

   Depending on your software application, this button might be called **Properties**, **Options**, **Printer Setup**, **Printer Properties**, **Printer**, or **Preferences**.

   **NOTE:** To set print settings for all print jobs, make the changes in the HP software provided with the printer. For more information on the HP software, see Printer management tools.

5. Select the appropriate options on the **Printing Shortcuts** tab.

   To change other print settings, click the other tabs.

   For more printing tips, see Tips for successful printing.

   **NOTE:** If you change the paper size, be sure to load the correct paper in the input tray and set the paper size on the printer control panel.

6. Click **OK** to close the **Properties** dialog box.
7. Click **Print** or **OK** to begin printing.

### To print envelopes (OS X)

1. From the **File** menu in your software, choose **Print**.
2. Make sure your printer is selected.
3. Select the appropriate envelope size from the **Paper Size** pop-up menu.

   If you do not see options on the Print dialog, click **Show Details**.

   **NOTE:** If you change the paper size, ensure that you have loaded the correct paper.

4. From the pop-up menu, choose **Paper Type/Quality**, and verify the paper type setting is set to **Plain Paper**.
5. Click **Print**.

# Print photos

You can print a photo from either a computer or a USB flash drive.

**CAUTION:** Do not remove the USB flash drive from the printer USB port while it is being accessed by the printer. This can damage the files on the drive. When removing the USB flash drive, make sure the USB port light is not blinking.

**NOTE:** The printer does not support encrypted USB flash drives or USB flash drives using the NTFS file system.

Do not leave unused photo paper in the input tray. The paper might start to curl, which could impair the quality of your printout. Photo paper should be flat before printing.

**TIP:** You can use this printer to print documents and photos on your mobile device (such as a smartphone or tablet). For more information, visit the HP Mobile Printing website at www.hp.com/go/mobileprinting. If a local version of this website is not available in your country/region or language, you might be directed to the HP Mobile Printing website in another country/region or language.

### To print a photo from the computer (Windows)

1. Load paper in the input tray. For more information, see Load paper.
2. From your software, select **Print**.
3. Make sure your printer is selected.
4. Click the button that opens the **Properties** dialog box.

   Depending on your software application, this button might be called **Properties**, **Options**, **Printer Setup**, **Printer Properties**, **Printer**, or **Preferences**.
5. Select the appropriate options on the **Printing Shortcuts** tab.

   To change other print settings, click the other tabs.

   For more printing tips, see Tips for successful printing.

   **NOTE:** If you change the paper size, be sure to load the correct paper in the input tray and set the paper size on the printer control panel.

6. Click **OK** to close the **Properties** dialog box.
7. Click **Print** or **OK** to begin printing.

**NOTE:** After the printing is finished, remove unused photo paper from the input tray. Store the photo paper so it does not start to curl, which could reduce the quality of your printout.

### To print a photo from the computer (OS X)

1. From the **File** menu in your software, choose **Print**.
2. Make sure your printer is selected.
3. Set the print options.

   If you do not see options on the Print dialog, click **Show Details**.

   - Choose the appropriate paper size in the **Paper Size** pop-up menu.

     **NOTE:** If you change the paper size ensure that you have loaded the correct paper.

   - Select the orientation.
4. From the pop-up menu, choose **Paper Type/Quality**, and then choose the following settings:
   - **Paper Type**: The appropriate photo paper type
   - **Quality**: Select the option that provides the best quality or maximum dpi.
   - Click the **Color Options** disclosure triangle, and then choose the appropriate **Photo Fix** option.
     - **Off**: applies no changes to the image.
     - **On**: automatically focuses the image; moderately adjusts image sharpness.
5. Select any other print settings you want, and then click **Print**.

### To print photos from a USB flash drive

You can connect a USB flash drive (such as a keychain drive) to the USB port on the front of the printer.

1. Insert a USB flash drive into the front USB port.
2. From the control panel display, touch **Print Photos**.
3. From the control panel display, touch **View and Print** to display photos.
4. On the printer display, select a photo that you want to print and touch **Continue**.
5. Scroll up or down to specify the number of photos to print.
6. Touch  (**Edit**) to select options to edit the selected photos. You can rotate, crop a photo, or adjust photo brightness.
7. Touch **Done** and touch **Continue** to preview the selected photo. If you wish to adjust layout or paper type, touch  (**Settings**), and then touch your selection.
8. Touch **Print** to begin printing.

# Print on special and custom-size paper

If your application supports custom-size paper, set the size in the application before printing the document. If not, set the size in the printer driver. You might need to reformat existing documents to print them correctly on custom-size paper.

### To set up custom sizes (Windows)

1. Open the HP printer software. For more information, see Open the HP printer software (Windows).
2. Click **Print, Scan & Fax** , and then click **Set Peferences**.
3. Click the **Paper/Quality** tab.
4. On the **Paper/Quality** tab, click the **Custom** button.
5. In the **Custom** dialog box, click **New**.

   Enter the name of the new custom size. Enter the dimensions of the new custom size.
6. Click **Add**, and then click **OK**.

### To print on special or custom-size paper (Windows)

**NOTE:** Before you can print on custom-size paper, you must set up the custom size in the Print Server Properties.

1. Load the appropriate paper in the input tray. For more information, see Load paper.
2. From the **File** menu in your software application, click **Print**.
3. Make sure your printer is selected.
4. Click the button that opens the **Properties** dialog box.

   Depending on your software application, this button might be called **Properties**, **Options**, **Printer Setup**, **Printer Properties**, **Printer**, or **Preferences**.

   **NOTE:** To set print settings for all print jobs, make the changes in the HP software provided with the printer. For more information on the HP software, see Printer management tools.
5. Click the **Paper/Quality** tab.
6. On the **Paper/Quality** tab, select the custom size from the **Paper Size** drop-down list.

   **NOTE:** If you change the paper size, be sure to load the correct paper in the input tray and set the paper size on the printer control panel.
7. Select any other print settings that you want, and then click **OK**.
8. Click **Print** or **OK** to begin printing.

### To print on special or custom-size paper (OS X)

Before you can print on custom-size paper, you must set up the custom size in the HP software.

1. Load the appropriate paper in the tray.
2. Create the new custom paper size.
   a. In the software you want to print from, click **File**, and then click **Print**.
   b. Make sure your printer is selected.
   c. Click **Manage Custom Sizes** in the **Paper Size** pop-up menu.

      If you do not see options on the Print dialog, click **Show Details**.
   d. Click **+**, and then select the new item in the list and type a name for the custom paper size.

e. Enter the height and width for your custom paper.

f. Click **Done** or **OK**, and then click **Save**.

3. Use the created custom paper size to print.

a. From the **File** menu in your software application, click **Print**.

b. Make sure your printer is selected.

c. Choose the custom paper size name you created in the **Paper Size** pop-up menu.

d. Select any other print settings you want, and then click **Print**.

**NOTE:** Software and system requirements can be found in the Readme file, which is available on the HP printer software CD provided with your printer.

# Print on both sides (duplexing)

### To print on both sides of the page (Windows)

1. Load paper in the input tray. For more information, see Load paper.
2. From your software, select **Print**.
3. Make sure your printer is selected.
4. Click the button that opens the **Properties** dialog box.

   Depending on your software application, this button might be called **Properties**, **Options**, **Printer Setup**, **Printer Properties**, **Printer**, or **Preferences**.

   **NOTE:** To set print settings for all print jobs, make the changes in the HP software provided with the printer. For more information on the HP software, see Printer management tools.
5. On the **Printing Shortcuts** tab, select a shortcut which supports the **Print On Both Sides** setting. Select an option from the **Print On Both Sides** drop-down list.

   To change other print settings, click the other tabs.

   For more printing tips, see Tips for successful printing.

   **NOTE:** If you change the paper size, be sure to load the correct paper in the input tray and set the paper size on the printer control panel.
6. Click **OK** to close the **Properties** dialog box.
7. Click **Print** or **OK** to begin printing.

### To print on both sides of the page (OS X)

1. From the **File** menu in your software, choose **Print**.
2. In the Print dialog, choose **Layout** from the pop-up menu.
3. Choose the type of binding you want for your two-sided pages, and then click **Print**.

# Print from mobile device

You can use your printer to print documents and photos directly from your mobile devices such as a smartphone or tablet.

- **iOS:** Use the Print option from the Share menu. No setup is required since iOS AirPrint is preinstalled. For more information about AirPrint, see Print with AirPrint™.
- **Android:** Download and enable the HP Print Service Plugin (supported by most Android devices) from the Google Play Store.

You can also use the HP All-in-One Printer Remote app to set up and use your HP printer for scanning, printing, and sharing documents. Install it from the app store for your mobile device.

For help enabling mobile printing, visit the HP Mobile Printing website at www.hp.com/go/mobileprinting . If a local version of this website is not available in your country/region or language, you might be directed to the HP Mobile Printing website in another country/region or language.

# Print with AirPrint™

Printing using Apple's AirPrint is supported for iOS 4.2 and Mac OS X 10.7 or later. Use AirPrint to print wirelessly to the printer from an iPad (iOS 4.2), iPhone (3GS or later), or iPod touch (third generation or later) in the following mobile applications:

- Mail
- Photos
- Safari
- Supported third-party applications, for example Evernote

To use AirPrint, ensure the following:

- The printer must be connected to the same network as your AirPrint enabled device. For more information about using AirPrint and about which HP products are compatible with AirPrint, visit the HP Mobile Printing website at www.hp.com/go/mobileprinting . If a local version of this website is not available in your country/region or language, you might be directed to the HP Mobile Printing site in another country/region or language.
- Load paper that matches the paper settings of the printer (see Load paper for more information). Accurately setting the paper size for the paper that is loaded, enables a mobile device to know what paper size it is printing.

# Tips for successful printing

Software settings selected in the print driver only apply to printing, they do not apply to copying or scanning.

You can print your document on both sides of the paper. For more information, see Print on both sides (duplexing).

### Ink tips

- If the print quality is not acceptable, see Printing issues for more information.
- Use Original HP cartridges.

  Original HP cartridges are designed and tested with HP printers and papers to help you easily produce great results, time after time.

  **NOTE:** HP cannot guarantee the quality or reliability of non-HP supplies. Product service or repairs required as a result of using a non-HP supply will not be covered under warranty.

  If you believe you purchased Original HP cartridges, go to www.hp.com/go/anticounterfeit.

- Install both the black and color cartridges correctly.

  For more information, see Replace the cartridges.

- Check the estimated ink levels in the cartridges to make sure there is sufficient ink.

  Ink level warnings and indicators provide estimates for planning purposes only.

  For more information, see Check the estimated ink levels.

**NOTE:** When you receive a low-ink warning message, consider having a replacement cartridge available to avoid possible printing delays. You do not need to replace the cartridges until print quality becomes unacceptable.

- Always turn off the printer with (the Power button) to allow the printer to protect the nozzles.

### Paper loading tips

For more information, also see Load paper.

- Ensure the paper is loaded in the input tray properly, and set the correct media size and media type. Upon loading paper in input tray, you will be prompted to set the media size and media type.
- Load a stack of paper (not just one page). All the paper in the stack should be of the same size and type to avoid a paper jam.
- Load paper with the print-side down.
- Ensure that paper loaded in the input tray lays flat and the edges are not bent or torn.
- Adjust the paper-width guides in the input tray to fit snugly against all paper. Make sure the guides do not bend the paper in the tray.
- Adjust the paper-length guide in the input tray to fit snugly against all paper. Make sure the guide do not bend the paper in the tray.

### Printer settings tips (Windows)

- To change default print settings, click **Print, Scan & Fax** , and then click **Set Preferences** in the HP printer software.

  To open the HP printer software, see Open the HP printer software (Windows) for more information.

- To select the number of pages to print per sheet, on the **Finishing** tab of the printer driver, select the appropriate option from the **Pages per sheet** drop-down list.
- If you want to change the page orientation, on the **Finishing** tab of the printer driver, select the appropriate option from the **Orientation** area.
- You can use printing shortcut to save time setting printing preferences. A printing shortcut stores the setting values that are appropriate for a particular kind of job, so that you can set all the options with a single click.

  To use it, go to the **Printing Shortcuts** tab, select a printing shortcut, and then click **OK**.

  To add a new printing shortcut, after making settings, click **Save As** and enter a name, and then click **OK**.

  To delete a printing shortcut, select it, and then click **Delete**.

**NOTE:** You cannot delete the default printing shortcuts.

### Printer settings tips (OS X)

- On the Print dialog, use the **Paper Size** pop-up menu to select the size of paper loaded in the printer.
- On the Print dialog, choose the **Paper Type/Quality** pop-up menu and select the appropriate paper type and quality.

### Notes

- Original HP cartridges are designed and tested with HP printers and papers to help you easily produce great results, time after time.

**NOTE:** HP cannot guarantee the quality or reliability of non-HP supplies. Product service or repairs required as a result of using a non-HP supply will not be covered under warranty.

If you believe you purchased Original HP cartridges, go to www.hp.com/go/anticounterfeit.

- Ink level warnings and indicators provide estimates for planning purposes only.

**NOTE:** When you receive a low-ink warning message, consider having a replacement cartridge available to avoid possible printing delays. You do not need to replace the cartridges until print quality becomes unacceptable.

# 4 Copy and scan

- Copy
- Scan
- Tips for copy and scan success

## Copy

**To copy document or ID card**

1. Make sure you have paper loaded in the input tray. For more information, see Load paper.
2. Place your original print-side down on the scanner glass or print-side up in the document feeder.
3. From the printer control panel display, touch **Copy** .
4. Select **Document** or **ID Card** .
5. Scroll left or right to select the number of copies, or make other settings.

**TIP:** To save your settings as defaults for future jobs, touch ( **Copy Settings** ), and then touch **Save Current Settings**.

6. Touch **Start Black** or **Start Color**.

## Scan

You can scan documents, photos, and other paper types, and send them to a variety of destinations, such as a computer or an email recipient.

When scanning documents with the HP printer software, you can scan to a format that can be searched and edited.

When scanning a borderless original, use the scanner glass and not the document feeder.

**NOTE:** Some scan functions are only available after you have installed the HP printer software.

**TIP:** If you have problems scanning documents, see Scan issues.

- Scan to a computer
- Scan to a memory device
- Scan to email
- Scan using Webscan
- Scanning documents as editable text
- Create a new scan shortcut (Windows)
- Change scan settings (Windows)

## Scan to a computer

Before scanning to a computer, make sure you have already installed the HP recommended printer software. The printer and computer must be connected and turned on.

In addition, on Windows computers, the printer software must be running prior to scanning.

You can use the HP printer software to scan documents into editable text. For more information, see Scanning documents as editable text.

### To enable the scan to a computer feature (Windows)

If the printer is connected to the computer with a USB connection, the feature for scanning to computer is enabled by default and cannot be disabled.

If you are using network connection, follow these instructions if the feature has been disabled, and you wish to enable it again.

1. Open the HP printer software. For more information, see Open the HP printer software (Windows).
2. Click **Print, Scan & Fax** , and then click **Scan** .
3. Select **Manage Scan to Computer**.
4. Click **Enable**.

### To enable the scan to a computer feature (OS X)

The scan to a computer feature is enabled by default from the factory. Follow these instructions if the feature has been disabled, and you wish to enable it again.

1. Open HP Utility.
2. Under **Scan Settings**, click **Scan to Computer**.
3. Ensure that **Enable Scan to Computer** is selected.

### To scan a document or photo to a file (Windows)

1. Load your original print-side down on the scanner glass or print-side up in the document feeder.
2. Open the HP printer software. For more information, see Open the HP printer software (Windows).
3. Click **Print, Scan & Fax** , and then click **Scan** .
4. Click **Scan a Document or Photo** .
5. Select the type of scan you want and then click **Scan** .
   - Choose **Save as PDF** to save the document (or photo) as a PDF file.
   - Choose **Save as JPEG** to save the photo (or document) as an image file.

**NOTE:** The initial screen allows you to review and modify basic settings. Click the **More** link at the top right corner of the Scan dialog to review and modify detailed settings.

For more information, see Change scan settings (Windows).

If **Show Viewer After Scan** is selected, you can make adjustments to the scanned image in the preview screen.

#### To scan an original from HP printer software (OS X)

1. Open HP Easy Scan.

   HP Easy Scan is located in the **Applications** folder.

2. Click **Scan** .

3. Choose the type of scan profile you want and follow the onscreen instructions.

## Scan to a memory device

You can scan directly to a USB flash drive from the printer control panel without using a computer or the HP printer software provided with the printer.

**CAUTION:** Do not remove the flash drive from the printer USB port while it is being accessed by the printer. This can damage the files on the USB flash drive. You can safely remove a USB flash drive only when the USB port light is not blinking.

**NOTE:** The printer does not support encrypted USB flash drives.

You can also use the HP printer software to scan documents into editable text. For more information, see Scanning documents as editable text.

#### To scan an original to a memory device from the printer control panel

1. Load your original print-side down on the scanner glass or print-side up in the document feeder.
2. Insert a USB flash drive.
3. Touch **Scan** , and then select **Memory Device**.
4. Make changes to scan options, if needed.
5. Touch **Start Scan** .

## Scan to email

- Scan to email through Scan tab
- Scan to email through Scan-to-Email app

### Scan to email through Scan tab

This section contains the following topics:

- Set up Scan to Email
- Scan a document or photo to email

#### Set up Scan to Email

#### To set up Scan to Email

You need to set up email addresses first, and then scan and email your documents.

**NOTE:** You need a network-connected computer to set up Scan to Email.

1. From Home screen, touch **Scan**, and then touch **Email**.
2. On the **Email Profile Not Set Up** screen, touch **Next**.
3. Touch **Using the HP Software Installed on a Computer** or **Using a Web Browser**, and then follow the onscreen message to set up email profile.

#### Scan a document or photo to email

#### To scan a document or photo to email from the control panel

1. Load your original print-side down on the scanner glass or print-side up in the document feeder.
2. From Home screen, touch **Scan**, and then touch **Email**.
3. Confirm the email account that you want to use, and touch **Continue**.

   If you want to change email account, touch , select the email account you want to use, and then touch **Continue**.
4. Enter recipient's email address in the **To** field.

   Or touch , select the email account you want to send to, and then touch **Continue**.
5. Enter email subject in the **Subject** field.
6. Touch **Touch to Preview** if you want to preview scanned photo or document.

   Touch  to change settings.
7. Touch **Start Scan**.
8. Touch **Finish** when the scan completes. Or touch **Add Page** to send another email.

## Scan to email through Scan-to-Email app

The Scan-to-Email App is an application that allows you to quickly scan and email photos or documents to the specified recipients directly from your HP All-in-One printer. You can set up your email addresses, log in to your accounts with the given PIN codes, and then scan and email your documents.

This section contains the following topics:

- Set up Scan to Email
- Scan a document or photo to email
- Change account settings

#### Set up Scan to Email

#### To set up Scan to Email

1. Enable Web Services on the printer. For more information, see Set up Web Services.
2. From Home screen, touch **Apps**, and then touch **Scan-to-Email** app.
3. On the **Welcome** screen, touch **Continue**.
4. Touch in the **Email:** box to enter your email address, and then touch **Done**.
5. Touch **Continue**.

6. A PIN will be sent to the email address you entered. Touch **Continue**.
7. Touch the **PIN** to enter your PIN and then touch **Done**.
8. Touch **Store Email** or **Auto-login**, depending upon how you want the printer to store your login information.
9. Select your scan type by touching **Photo** or **Document**.
10. For photos, select the scan settings, and touch **Continue**.

    For documents, continue with the next step.
11. Verify the email information, and touch **Continue**.
12. Touch **Scan to Email**.
13. Touch **OK** when the scan completes, and then touch **Yes** to send another email, or **No** to finish.

### Scan a document or photo to email

#### To scan a document or photo to email from the control panel

1. Load your original print-side down on the scanner glass or print-side up in the document feeder.
2. From Home screen, touch **Apps**, and then touch **Scan-to-Email** app.
3. On the control panel display, select the account that you want to use, and touch **Continue**.

   **NOTE:** Select **My account is not listed** if you do not have an account. You will be prompted to enter your email address and receive a PIN.
4. If prompted, enter the PIN.
5. Select your scan type by touching **Photo** or **Document**.
6. For photos, select the scan settings, and touch **Continue**.

   For documents, continue with the next step.
7. To add or remove recipients, touch **Modify Recipient(s)**, and when finished touch **Done**.
8. Verify the email information and touch **Continue**.
9. Touch **Scan to Email**.
10. Touch **OK** when the scan completes, and then touch **Yes** to send another email, or **No** to finish.

#### To scan a document or photo to email from HP printer software (Windows)

1. Load your original print-side down on the scanner glass or print-side up in the document feeder.
2. Open the HP printer software. For more information, see Open the HP printer software (Windows).
3. Click **Print, Scan & Fax** , and then click **Scan** .
4. Click **Scan a Document or Photo** .
5. Select the type of scan you want and then click **Scan** .

   Choose **Email as PDF** or **Email as JPEG** to open your email software with the scanned file as an attachment.

**NOTE:** The initial screen allows you to review and modify basic settings. Click the **More** link at the top right corner of the Scan dialog to review and modify detailed settings.

For more information, see Change scan settings (Windows).

If **Show Viewer After Scan** is selected, you can make adjustments to the scanned image in the preview screen.

### Change account settings

#### To change account settings from the printer control panel

1. From Home screen, touch **Apps**, and then touch **Scan-to-Email** app.
2. Select the account that you want to change, and touch **Modify**.
3. Select which setting you want to modify, and follow the onscreen prompts.
   - Auto-login
   - Store Email
   - Remove from list
   - Change PIN
   - Delete Account

## Scan using Webscan

Webscan is a feature of the embedded web server that lets you scan photos and documents from your printer to your computer using a web browser.

This feature is available even if you did not install the printer software on your computer.

For more information, see Embedded web server.

**NOTE:** By default, Webscan is off. You can enable this feature from the EWS.

If you are unable to open Webscan in the EWS, your network administrator might have turned it off. For more information, contact your network administrator or the person who set up your network.

#### To enable Webscan

1. Open the embedded web server. For more information, see Embedded web server.
2. Click the **Settings** tab.
3. In the **Security** section, click **Administrator Settings**.
4. Select **Webscan** to enable Webscan.
5. Click **Apply**.

#### To scan using Webscan

Scanning using Webscan offers basic scan options. For additional scan options or functionality, scan from the HP printer software.

1. Load your original print-side down on the scanner glass or print-side up in the document feeder.
2. Open the embedded web server. For more information, see Embedded web server.

3. Click the **Scan** tab.
4. Click **Webscan** in the left pane, change any settings, and then click **Start Scan** .

**TIP:** To scan documents as editable text, you must install the HP software included with the printer. For more information, see Scanning documents as editable text.

# Scanning documents as editable text

When scanning documents, you can use the HP software to scan documents into a format that you can search, copy, paste, and edit. This allows you to edit letters, newspaper clippings, and many other documents.

- Scan documents as editable text
- Guidelines for scanning documents as editable text

## Scan documents as editable text

Use the following guidelines for scanning documents as editable text.

### To scan a document to editable text (Windows)

You can scan different types of printed documents into a format in which you can search and edit.

If **Save as Editable Text (OCR)** is not in the list of available scan options, you need to reinstall your software and choose that option.

1. Load your original print-side down on the scanner glass or print-side up in the document feeder.
2. Open the HP printer software. For more information, see Open the HP printer software (Windows).
3. Click **Print, Scan & Fax** , and then click **Scan** .
4. Click **Scan a Document or Photo** .
5. Select **Save as Editable Text (OCR)** and click **Scan** .

**NOTE:** The initial screen allows you to review and modify basic settings. Click the **More** link at the top right corner of the Scan dialog to review and modify detailed settings.

For more information, see Change scan settings (Windows).

If **Show Viewer After Scan** is selected, you can make adjustments to the scanned image in the preview screen.

### To scan documents as editable text (OS X)

1. Load your original print-side down on the scanner glass or print-side up in the document feeder.
2. Open HP Scan.

   HP Scan is located in the **Applications/HP** folder at the top level of the hard disk.
3. Click the **Scan** button. A dialog appears requesting confirmation of your scanning device and the scan settings preset.
4. Follow the onscreen instructions to complete the scan.
5. When all of the pages have been scanned, select **Save** from the **File** menu. The Save dialog appears.
6. Select the type of editable text.

| I want to... | Follow these steps |
|---|---|

| | |
|---|---|
| Extract just the text, without any of the formatting of the original | Select **TXT** from the **Format** pop-up menu. |
| Extract the text, as well as some of the formatting of the original | Select **RTF** from the **Format** pop-up menu. |
| Extract the text and make it searchable in PDF readers | Select **Searchable PDF** from the **Format** pop-up menu. |

7. Click **Save**.

### Guidelines for scanning documents as editable text

Use the following guidelines to ensure the software successfully converts your documents.

- **Make sure the scanner glass or document feeder window is clean.**

  Smudges or dust on the scanner glass or document feeder window can prevent the software from converting the document to editable text

- **Make sure the document is loaded correctly.**

  Make sure the original is properly loaded and that the document is not skewed.

- **Make sure the text on the document is clear.**

  To successfully convert the document to editable text, the original must be clear and of high quality.

  The following conditions can cause the software to not convert the document successfully:

  - The text on the original is faint or wrinkled.
  - The text is too small.
  - The structure of the document is too complex.
  - The text is tightly spaced. For example, if the text that the software converts has missing or combined characters, "rn" might appear as "m."
  - The text is on a colored background. Colored backgrounds can cause images in the foreground to blend too much.

- **Choose the correct profile.**

  Be sure to select a shortcut or preset that allows scanning as editable text. These options use scan settings designed to maximize the quality of your OCR scan.

  **Windows**: Use the **Editable Text (OCR)** or **Save as PDF** shortcuts.

  **OS X**: Use the **Documents with Text** preset.

- **Save your file in the correct format.**

  If you want to extract just the text from the document, without any of the formatting of the original, select a plain text format, such as **Text (.txt)** or **TXT**.

  If you want to extract the text, as well as some of the formatting of the original, select Rich Text Format, such as **Rich Text (.rtf)** or **RTF**, or searchable PDF format, such as **Searchable PDF (.pdf)** or **Searchable PDF** .

## Create a new scan shortcut (Windows)

You can create your own scan shortcut to make scanning easier. For example, you might want to regularly scan and save photos in PNG format, rather than JPEG.

1. Load your original print-side down on the scanner glass or print-side up in the document feeder.
2. Open the HP printer software. For more information, see Open the HP printer software (Windows).
3. Click **Print, Scan & Fax** , and then click **Scan** .
4. Click **Scan a Document or Photo** .
5. Click **Create New Scan Shortcut** .
6. Enter a descriptive name, choose an existing shortcut on which to base your new shortcut, and then click **Create** .

   For example, if you are creating a new shortcut for photos, choose either **Save as JPEG** or **Email as JPEG** . This makes available the options for working with graphics when scanning.
7. Change the settings for your new shortcut to meet your needs, and then click the save icon to the right of the shortcut.

**NOTE:** The initial screen allows you to review and modify basic settings. Click the **More** link at the top right corner of the Scan dialog to review and modify detailed settings.

For more information, see Change scan settings (Windows).

## Change scan settings (Windows)

You can modify any of the scan settings either for a singular use or save the changes to use permanently. These settings include options such as page size and orientation, scan resolution, contrast, and the folder location for saved scans.

1. Load your original print-side down on the scanner glass or print-side up in the document feeder.
2. Open the HP printer software. For more information, see Open the HP printer software (Windows).
3. Click **Print, Scan & Fax** , and then click **Scan** .
4. Click **Scan a Document or Photo** .
5. Click the **More** link in the top right corner of the HP Scan dialog.

   The detailed settings pane appears on the right. The left column summarizes the current settings for each section. The right column allows you to change the settings in the highlighted section.
6. Click each section at the left of the detailed settings pane to review the settings in that section.

   You can review and change most settings using drop-down menus.

   Some settings allow greater flexibility by displaying a new pane. These are indicated by a + (plus sign) at the right of the setting. You must either accept or cancel any changes on this pane to return to the detailed settings pane.
7. When you have finished changing settings, do one of the following.
   - Click **Scan** . You are prompted to save or reject the changes to the shortcut after the scan is finished.
   - Click the save icon to the right of the shortcut. It saves the changes into the shortcut so that you can reuse them next time. Otherwise, the changes only affect the currect scan. Then click **Scan** .

Go online to learn more about using the HP Scan software. Learn how to:

- customize scan settings, such as image file type, scan resolution, and contrast levels.
- scan to network folders and cloud drives.
- preview and adjust images before scanning.

# Tips for copy and scan success

Use the following tips to copy and scan successfully.

- Keep the glass and the back of the lid clean. The scanner interprets anything it detects on the glass as part of the image.
- Load your original print-side down on the scanner glass.
- To make a large copy of a small original, scan the original into the computer, resize the image in the scanning software, and then print a copy of the enlarged image.
- If you want to adjust scan size, output type, scan resolution, or file type, and so on, start scan from the printer software.
- To avoid incorrect or missing scanned text, make sure the brightness is set appropriately in the software.
- If you want to scan a document with several pages into one file instead of multiple files, start the scan with the printer software instead of selecting **Scan** from the printer display.
- To scan multiple pages from the scanner glass, set the scan resolution in the printer software to 300dpi or below.

  All scan resolutions in the printer software are supported when scanning from the document feeder.

# 5 Fax

You can use the printer to send and receive faxes, including color faxes. You can schedule faxes to be sent at a later time within 24 hours and set up phone book contacts to send faxes quickly and easily to frequently used numbers. From the printer control panel, you can also set a number of fax options, such as resolution and the contrast between lightness and darkness on the faxes you send.

**NOTE:** Before you begin faxing, make sure you have set up the printer correctly for faxing. You can verify the fax is set up correctly by running the fax setup test from the printer control panel.

- Send a fax
- Receive a fax
- Set up phone book contacts
- Change fax settings
- Fax and digital phone services
- Fax on Voice over Internet Protocol
- Use reports
- Additional fax setup

## Send a fax

You can send a fax in a variety of ways, depending on your situation or need.

- Send a standard fax
- Send a standard fax from the computer
- Send a fax from a phone
- Send a fax using monitor dialing
- Send a fax using printer memory
- Send a fax to multiple recipients
- Send a fax in Error Correction Mode

### Send a standard fax

You can easily send a single- or multiple-page black-and-white or color fax by using the printer control panel.

**NOTE:** Send single-page faxes by placing the original on the glass. Send multiple page faxes using the document feeder.

**NOTE:** If you need printed confirmation that your faxes were successfully sent, fax confirmation must be enabled.

### To send a standard fax from the printer control panel

1. Load your original print-side down on the scanner glass or print-side up in the document feeder.
2. From the printer control panel display, touch **Fax** .
3. Touch **Send Now**.
4. Enter the fax number by using the keypad or by selecting from the phone book

> **TIP:** To add a pause in the fax number you are entering, touch * repeatedly, until a dash (-) appears on the display.

5. Touch **Black** or **Color** .

   If the printer detects an original loaded in the document feeder, it sends the document to the number you entered.

> **TIP:** If the recipient reports issues with the quality of the fax, try changing the resolution or contrast of your fax.

## Send a standard fax from the computer

You can fax a document directly from your computer without printing it first.

To use this feature, make sure you have installed the HP printer software on your computer, the printer is connected to a working telephone line, and the fax function is set up and functioning correctly.

### To send a standard fax from the computer (Windows)

1. Open the document on your computer that you want to fax.
2. On the **File** menu in your software application, click **Print**.
3. From the **Name** list, select the printer that has **"fax"** in the name.
4. To change settings (such as selecting to send the document as a black fax or a color fax), click the button that opens the **Properties** dialog box. Depending on your software application, this button might be called **Properties**, **Options**, **Printer Setup**, **Printer**, or **Preferences**.
5. After you have changed any settings, click **OK**.
6. Click **Print** or **OK**.
7. Enter the fax number and other information for the recipient, change any further settings for the fax, and then click **Send Fax**. The printer begins dialing the fax number and faxing the document.

### To send a standard fax from the computer (OS X)

1. Open the document on your computer that you want to fax.
2. From the **File** menu in your software, click **Print**.
3. Select the printer that has **"(Fax)"** in the name.
4. Enter a fax number or a name from your Contacts that already has a fax number entry.
5. When you have finished filling out the fax information, click **Fax**.

## Send a fax from a phone

You can send a fax using your telephone extension. This allows you to talk with the intended recipient before sending the fax.

**To send a fax from an extension phone**

1. Load your original print-side down on the scanner glass or print-side up in the document feeder.
2. Dial the number by using the keypad on the phone that is connected to the printer.

   If the recipient answers the telephone, inform the recipient that they should receive the fax on their fax machine after they hear fax tones. If a fax machine answers the call, you will hear fax tones from the receiving fax machine.
3. From the printer control panel display, touch **Fax** .
4. Touch **Send Now**.
5. When you are ready to send the fax, touch **Black** or **Color** .

   The telephone is silent while the fax is transmitting. If you want to speak to the recipient later, remain on the line until the transmission is complete. If you were finished talking to the recipient, you can hang up the telephone as soon as the fax begins transmitting.

## Send a fax using monitor dialing

When you send a fax using monitor dialing, you can hear the dial tones, telephone prompts, or other sounds through the speakers on the printer. This enables you to respond to prompts while dialing, as well as control the pace of your dialing.

**TIP:** If you are using a calling card and do not enter your PIN fast enough, the printer might start sending fax tones too soon and cause your PIN not to be recognized by the calling card service. If this is the case, create a phone book contact to store the PIN for your calling card.

**NOTE:** Make sure the volume is turned on to hear a dial tone.

**To send a fax using monitor dialing from the printer control panel**

1. Load your original print-side down on the scanner glass or print-side up in the document feeder.
2. From the printer control panel display, touch **Fax** .
3. Touch **Send Now**.
4. Touch **Black** or **Color** .
5. When you hear the dial tone, enter the number by using the keypad on the printer control panel.
6. Follow any prompts that might occur.

   **TIP:** If you are using a calling card to send a fax and you have your calling card PIN stored as a phone book contact, when prompted to enter your PIN, touch ( **Phone book** ), and then touch ( **Contact** ) to select the phone book contact where you have your PIN stored.

   Your fax is sent when the receiving fax machine answers.

## Send a fax using printer memory

You can scan a black-and-white fax into memory and then send the fax from memory. This feature is useful if the fax number you are trying to reach is busy or temporarily unavailable. The printer scans the originals into memory and sends them once it is able to connect to the receiving fax machine. After the printer scans the pages into memory, you can immediately remove the originals from the document feeder tray or scanner glass.

**NOTE:** You can only send a black-and-white fax from memory.

**To send a fax using printer memory**

1. Ensure that **Scan and Fax Method** is turned on.
   a. From the printer control panel display, touch **Fax** .
   b. Touch **Setup** , and then touch **Preferences** .
   c. Touch **Scan and Fax Method** to turn it on.
2. Load your original print-side up in the document feeder.
3. From the printer control panel display, touch **Fax** .
4. Touch **Send Now**.
5. Enter the fax number by using the keypad.

   Or touch  ( **Phone book** ), and then touch  ( **Contact** ),  ( **Group** ), or  ( **Call history** ) to select a number or group to dial.
6. Touch **Send Fax** .

   The printer scans the originals into memory and sends the fax when the receiving fax machine is available.

## Send a fax to multiple recipients

You can send a fax to multiple recipients by creating a group phone book contact made up of two or more individual recipients.

**To send a fax to multiple recipients using group phone book**

1. Load your original print-side down on the scanner glass or print-side up in the document feeder.
2. From the printer control panel display, touch **Fax** .
3. Touch **Send Now**.
4. Touch  ( **Phone book** ), and then touch  ( **Group** ).
5. Touch the name of the group that you want to send.
6. Touch **Send Fax** .

   Printer sends the document to all the numbers in the selected group.

**TIP:** If the recipient reports issues with the quality of the fax, try changing the resolution or contrast of your fax.

## Send a fax in Error Correction Mode

**Error Correction Mode** (ECM) prevents loss of data due to poor phone lines by detecting errors that occur during transmission and automatically requesting retransmission of the erroneous portion. Phone charges are unaffected, or might even be reduced, on good phone lines. On poor phone lines, ECM increases sending time and phone charges, but sends the data much more reliably. The default setting is **On** . Turn ECM off only if it increases phone charges substantially, and if you can accept poorer quality in exchange for reduced charges.

If you turn ECM off:

- The quality and transmission speed of faxes you send and receive are affected.
- The **Speed** is automatically set to **Medium** .
- You can no longer send or receive faxes in color.

**To change the ECM setting from the control panel**

1. From the printer control panel display, touch **Fax** .
2. Touch **Setup** .
3. Touch **Preferences** .
4. Scroll to **Error Correction Mode** to touch to turn the feature on or off.

# Receive a fax

You can receive faxes automatically or manually. If you turn off the **Auto Answer** option, you must receive faxes manually. If you turn on the **Auto Answer** option (the default setting), the printer automatically answers incoming calls and receives faxes after the number of rings that are specified by the **Rings to Answer** setting. (The default **Rings to Answer** setting is five rings.)

If you receive a Legal-size or larger fax and the printer is not currently set to use Legal-size paper, the printer reduces the fax so that it fits on the paper that is loaded. If you have disabled the **Automatic Reduction** feature, the printer prints the fax on two pages.

**NOTE:** If you are copying a document when a fax arrives, the fax is stored in the printer memory until the copying finishes.

- Receive a fax manually
- Set up backup fax
- Reprint received faxes from memory
- Forward faxes to another number
- Set automatic reduction for incoming faxes
- Block unwanted fax numbers
- Receive faxes using HP Digital Fax

## Receive a fax manually

When you are on the phone, the person you are speaking with can send you a fax while you are still connected. You can pick up the handset to talk or listen for fax tones.

You can receive faxes manually from a phone that is directly connected to the printer (on the 2-EXT port).

**To receive a fax manually**

1. Make sure the printer is turned on and you have paper loaded in the main tray.
2. Remove any originals from the document feeder tray.
3. Set the **Rings to Answer** setting to a high number to allow you to answer the incoming call before the printer answers. Or, turn off the **Auto Answer** setting so that the printer does not automatically answer incoming calls.

4. If you are currently on the phone with the sender, instruct the sender to press **Start** on their fax machine.
5. Do the following when you hear fax tones from a sending fax machine.
   a. From the printer control panel display, touch **Fax** , touch **Send and Receive**, and then touch **Receive Now**.
   b. After the printer begins to receive the fax, you can hang up the phone or remain on the line. The phone line is silent during fax transmission.

## Set up backup fax

Depending on your preference and security requirements, you can set up the printer to store all the faxes it receives, only the faxes it receives while the printer is in an error condition, or none of the faxes it receives.

### To set backup fax from the printer control panel

1. From the printer control panel display, touch **Fax** .
2. Touch **Setup** .
3. Touch **Preferences** .
4. Touch **Backup Fax Reception**.
5. Touch the required setting.

| | |
|---|---|
| **On** | The default setting. When **Backup fax** is **On** , the printer stores all received faxes in memory. This enables you to reprint up to 30 of the most recently printed faxes if they are still saved in memory.<br>**NOTE:** When printer memory is low, it overwrites the oldest, printed faxes as it receives new faxes. If the memory becomes full of unprinted faxes, the printer stops answering incoming fax calls.<br>**NOTE:** If you receive a fax that is too large, such as a very detailed color photo, it might not be stored in memory due to memory limitations. |
| **On Error Only** | Causes the printer to store faxes in memory only if an error condition exists that prevents the printer from printing the faxes (for example, if the printer runs out of paper). The printer continues to store incoming faxes as long as there is memory available. (If the memory becomes full, the printer stops answering incoming fax calls.) When the error condition is resolved, the faxes stored in memory print automatically, and then they are deleted from memory. |
| **Off** | Faxes are never stored in memory. For example, you might want to turn off **Backup fax** for security purposes. If an error condition occurs that prevents the printer from printing (for example, the printer runs out of paper), the printer stops answering incoming fax calls. |

## Reprint received faxes from memory

The received faxes that are not printed are stored in memory.

**NOTE:** After the memory becomes full, the printer cannot receive the new fax until you print or delete the faxes from memory. You might also want to delete the faxes in memory for security or privacy purposes.

You can reprint up to 30 of the most recently printed faxes, if they are still in memory. For example, you might need to reprint your faxes if you lost the copy of your last printout.

### To reprint faxes in memory from the printer control panel

1. Make sure you have paper loaded in the main tray. For more information, see Load paper.
2. From the printer control panel display, touch **Fax** .

3. Touch **Reprint**.

   The faxes are printed in the reverse order from which they were received with the most recently received fax printed first, and so on.

4. Touch **Received Fax List**.

5. Touch to select a fax, and then touch **Print**.

   If you want to stop reprinting the faxes in memory, touch (Cancel).

## Forward faxes to another number

You can set up the printer to forward your faxes to another fax number. All faxes are forwarded in black and white, regardless of how they were originally sent.

HP recommends that you verify the number you are forwarding to is a working fax line. Send a test fax to make sure the fax machine is able to receive your forwarded faxes.

### To forward faxes from the printer control panel

1. From the printer control panel display, touch **Fax** .

2. Touch **Setup** .

3. Touch **Preferences** .

4. Touch **Fax Forwarding**.

5. Touch **On (Print and Forward)** to print and forward the fax, or select **On (Forward)** to forward the fax.

**NOTE:** If the printer is not able to forward the fax to the designated fax machine (for example, if it is not turned on), the printer prints the fax. If you set up the printer to print error reports for received faxes, it also prints an error report.

6. At the prompt, enter the number of the fax machine intended to receive the forwarded faxes, and then touch **Done** . Enter the required information for each of the following prompts: start date, start time, end date, and end time.

7. Fax forwarding is activated. Touch **OK** to confirm.

   If the printer loses power when fax forwarding is set up, it saves the fax forwarding setting and phone number. When the power is restored to the printer, the fax forwarding setting is still **On** .

**NOTE:** You can cancel fax forwarding by selecting **Off** from the **Fax Forwarding** menu.

## Set automatic reduction for incoming faxes

The **Automatic Reduction** setting determines what the printer does if it receives a fax that is too large for the loaded paper size. This setting is turned on by default, so the image of the incoming fax is reduced to fit on one page, if possible. If this feature is turned off, information that does not fit on the first page is printed on a second page. **Automatic Reduction** is useful when you receive a fax larger than A4/Letter-size fax and A4/Letter-size paper is loaded in the input tray.

### To set automatic reduction from the printer control panel

1. From the printer control panel display, touch **Fax** .

2. Touch **Setup** .

3. Touch **Preferences** .
4. Scroll to **Automatic Reduction** and touch to turn the feature on or off.

## Block unwanted fax numbers

If you subscribe to a caller ID service through your phone provider, you can block specific fax numbers so the printer does not receive faxes received from those numbers. When an incoming fax call is received, the printer compares the number to the list of junk fax numbers to determine if the call should be blocked. If the number matches a number in the blocked fax numbers list, the fax is not received. (The maximum number of fax numbers you can block varies by model.)

**NOTE:** This feature is not supported in all countries/regions. If it is not supported in your country/region, **Junk Fax Blocking** does not appear in the **Preferences** menu.

**NOTE:** If no phone numbers are added in the Caller ID list, it is assumed that you are not subscribed to a Caller ID service.

You can block specific fax numbers by adding them to the junk fax list, unblock these numbers by removing them from the junk fax list, and print a list of blocked junk fax numbers.

### To add a number to the junk fax list

1. From the printer control panel display, touch **Fax** .
2. Touch **Setup** .
3. Touch **Preferences** .
4. Touch **Junk Fax Blocking** .
5. Touch **+** (Plus Sign).
6. Do one of the following.
   - To select a fax number to block from the call history list, touch  ( **Call history** ).
   - Manually enter a fax number to block, and touch **Add**.

**NOTE:** Make sure you enter the fax number as it appears on the control panel display, and not the fax number that appears on the fax header of the received fax, as these numbers can be different.

### To remove numbers from the junk fax list

If you no longer want to block a fax number, you can remove it from the junk fax list.

1. From the printer control panel display, touch **Fax** .
2. Touch **Setup** .
3. Touch **Preferences** .
4. Touch **Junk Fax Blocking** .
5. Touch the number you want to remove, and then touch **Remove**.

### To print a junk fax list

1. From the printer control panel display, touch **Fax** .
2. Touch **Setup** , and then touch **Reports** .

3. Touch **Print Fax Reports** .
4. Touch **Junk Fax Report**.
5. Touch **Print** to begin printing.

## Receive faxes using HP Digital Fax

You can use HP Digitial Fax to automatically receive faxes and save them directly to your computer. This saves paper and ink.

Received faxes are saved as TIFF (Tagged Image File Format) or PDF (Portable Document Format).

The files are named in the following method: XXXX_YYYYYYYY_ZZZZZZ.tif, where X is the sender's information, Y is the date, and Z is the time that the fax was received.

**NOTE:** Fax to Computer is available for receiving black-and-white faxes only. Color faxes will be printed.

### HP Digital Fax requirements

- The destination folder of the computer must be available at all times. Faxes will not be saved if the computer is asleep or in hibernate mode.
- Paper must be loaded in the input tray. For more information, see Load paper.

### To set up or modify HP Digital Fax (Windows)

1. Open the HP printer software. For more information, see Open the HP printer software (Windows).
2. Click **Print, Scan & Fax** , and then click **Fax**.
3. Click **Digital Fax Setup Wizard** .
4. Follow the onscreen instructions.

### To set up or modify HP Digital Fax (OS X)

1. Open HP Utility. For more information, see HP Utility (OS X).
2. Select the printer.
3. Click **Digital Fax Archive** in the Fax Settings section.

### To turn off HP Digital Fax

1. From the printer control panel display, touch **Fax** .
2. Touch **Setup** .
3. Touch **Preferences** and then touch **HP Digital Fax**.
4. Touch **Turn Off HP Digital Fax**.
5. Touch **Yes**.

# Set up phone book contacts

You can set up frequently used fax numbers as phone book contacts. This lets you quickly dial those numbers using the printer control panel.

**TIP:** In addition to creating and managing phone book contacts from the printer control panel, you can also use tools available on your computer, such as the HP software included with the printer and the printer EWS. For more information, see Printer management tools.

- Create and edit a phone book contact
- Create and edit a group phone book contact
- Delete phone book contacts
- Print a list of phone book contacts

## Create and edit a phone book contact

You can store fax numbers as phone book contacts.

### To set up phone book contacts

1. From the printer control panel display, touch **Fax** .
2. Touch **Send Now**.
3. Touch  ( **Phone book** ), and then touch  ( **Contact** ).
4. Touch  (**Plus Sign**) to add a contact.
5. Touch **Name**, and then enter the name of the phone book contact, and then touch **Done** .
6. Touch **Fax Number**, and then enter the fax number for the phone book contact, and then touch **Done** .

**NOTE:** Be sure to include any pauses or other required numbers, such as an area code, an access code for numbers outside a PBX system (usually a 9 or 0), or a long-distance prefix.

7. Touch **Add**.

### To change phone book contacts

1. From the printer control panel display, touch **Fax** .
2. Touch **Send Now**.
3. Touch  ( **Phone book** ), and then touch  ( **Contact** ).
4. Touch  (**Edit**) to edit a contact.
5. Touch the phone book contact that you want to edit.
6. Touch **Name** and then edit the name of the Phone Book contact, and then touch **Done** .
7. Touch **Fax Number** and edit the fax number for the phone book contact, and then touch **Done** .

**NOTE:** Be sure to include any pauses or other required numbers, such as an area code, an access code for numbers outside a PBX system (usually a 9 or 0), or a long-distance prefix.

8. Touch **Done** .

## Create and edit a group phone book contact

You can store groups of fax numbers as group phone book contacts.

### To set up group phone book contacts

**NOTE:** Before you can create a group phone book contact, you must have already created at least one phone book contact.

1. From the printer control panel display, touch **Fax** .
2. Touch **Send Now**.
3. Touch  ( **Phone book** ), and then touch  ( **Group** ).
4. Touch  (**Plus Sign**) to add a group.
5. Touch **Name**, and then enter the name of the group, and then touch **Done** .
6. Touch **Number of Members**, select the phone book contacts you want to include in this group, and then touch **Select**.
7. Touch **Create**.

### To change group phone book contacts

1. From the printer control panel display, touch **Fax** .
2. Touch **Send Now**.
3. Touch  ( **Phone book** ), and then touch  ( **Group** ).
4. Touch  (**Edit**) to edit a group.
5. Touch the group phone book contact that you want to edit.
6. Touch **Name** and then edit the name of the group phone book contact, and then touch **Done** .
7. Touch **Number of Members**.
8. If you want to add a contact to the group, touch  (**Plus Sign**). Touch a contact name, and then touch **Select**.

   If you want to remove a contact from the group, touch to deselect the contact.
9. Touch **Done** .

## Delete phone book contacts

You can delete phone book contacts or group phone book contacts.

1. From the printer control panel display, touch **Fax** .
2. Touch **Send Now**.
3. Touch  ( **Phone book** ), and then touch  ( **Contact** ).

4. Touch  (**Edit**).
5. Touch the name of the phone book contact you want to delete.
6. Touch **Delete**.
7. Touch **Yes** to confirm.

## Print a list of phone book contacts

You can print a list of your phone book contacts.

1. Load paper in the tray. For more information, see Load paper.
2. From the printer control panel display, touch **Fax** .
3. Touch **Setup** , and then touch **Reports** .
4. Touch **Print Phone Book**.

# Change fax settings

After completing the steps in the getting started guide that came with the printer, use the following steps to change the initial settings or to configure other options for faxing.

- Configure the fax header
- Set the answer mode (Auto answer)
- Set the number of rings before answering
- Change the answer ring pattern for distinctive ring
- Set the dial type
- Set the redial options
- Set the fax speed
- Set the fax sound volume

## Configure the fax header

The fax header prints your name and fax number on the top of every fax you send. HP recommends that you set up the fax header by using the HP software provided with the printer. You can also set up the fax header from the printer control panel, as described here.

**NOTE:** In some countries/regions, the fax header information is a legal requirement.

### To set or change the fax header

1. From the printer control panel display, touch **Fax** .
2. Touch **Setup** , and then touch **Preferences** .
3. Touch **Fax Header**.
4. Enter your personal or company name, and then touch **Done** .
5. Enter your fax number, and then touch **Done** .

## Set the answer mode (Auto answer)

The answer mode determines whether the printer answers incoming calls.

- Turn on the **Auto Answer** setting if you want the printer to answer faxes **automatically**. The printer answers all incoming calls and faxes.
- Turn off the **Auto Answer** setting if you want to receive faxes **manually**. You must be available to respond in person to the incoming fax call or else the printer does not receive faxes.

### To set the answer mode

1. From the printer control panel display, touch **Fax** .
2. Touch **Setup** , and then touch **Preferences** .
3. Touch **Auto Answer** to turn it on or off.

You may also access this feature by pressing  (the **Fax Status** button) on the Home screen.

## Set the number of rings before answering

If you turn on the **Auto Answer** setting, you can specify how many rings occur before incoming calls are automatically answered.

The **Rings to Answer** setting is important if you have an answering machine on the same phone line as the printer, because you want the answering machine to answer the phone before the printer does. The number of rings to answer for the printer should be greater than the number of rings to answer for the answering machine.

For example, set your answering machine to a low number of rings and the printer to answer in the maximum number of rings. (The maximum number of rings varies by country/region.) In this setup, the answering machine answers the call and the printer monitors the line. If the printer detects fax tones, it receives the fax. If the call is a voice call, the answering machine records the incoming message.

### To set the number of rings before answering

1. From the printer control panel display, touch **Fax** .
2. Touch **Setup** , and then touch **Preferences** .
3. Touch **Rings to Answer** .
4. Touch to set the number of rings.
5. Touch **Done** .

## Change the answer ring pattern for distinctive ring

Many phone companies offer a distinctive ring feature that allows you to have several phone numbers on one phone line. When you subscribe to this service, each number is assigned a different ring pattern. You can set up the printer to answer incoming calls that have a specific ring pattern.

If you connect the printer to a line with distinctive ring, have your telephone company assign one ring pattern to voice calls and another ring pattern to fax calls. HP recommends that you request double or triple rings for a fax number. When the printer detects the specified ring pattern, it answers the call and receives the fax.

**TIP:** You can also use the Ring Pattern Detection feature in the printer control panel to set distinctive ring. With this feature, the printer recognizes and records the ring pattern of an incoming call and, based on this call, automatically determines the distinctive ring pattern assigned by your telephone company to fax calls.

If you do not have a distinctive ring service, use the default ring pattern, which is **All Standard Rings** .

**NOTE:** The printer cannot receive faxes when the main phone number is off the hook.

**To change the answer ring pattern for distinctive ring**

1. Ensure that the printer is set to answer fax calls automatically.

   For more information, see Set the answer mode (Auto answer).

2. From the printer control panel display, touch **Fax** .
3. Touch **Setup** , and then select **Preferences** .
4. Touch **Distinctive Ring** .
5. A message appears stating that this setting should not be changed unless you have multiple numbers on the same telephone line. Touch **Yes** to continue.
6. Do one of the following:
   - Touch one ring pattern, touch **Fax Wizard**, and then follow the wizard.
   - Touch **Ring Pattern Detection**, and then follow the instructions on the printer control panel.

**NOTE:** If the Ring Pattern Detection feature cannot detect the ring pattern or if you cancel the feature before it finishes, the ring pattern is automatically set to the default, which is **All Standard Rings** .

**NOTE:** If you are using a PBX phone system that has different ring patterns for internal and external calls, you must call the fax number from an external number.

## Set the dial type

Use this procedure to set tone-dialing or pulse-dialing mode. The factory-set default is **Tone**. Do not change the setting unless you know that your phone line cannot use tone dialing.

**NOTE:** The pulse-dialing option is not available in all countries/regions.

**To set the dial type**

1. From the printer control panel display, touch **Fax** .
2. Touch **Setup** , and then touch **Preferences** .
3. Touch **Dial Type**.
4. Touch to select **Tone** or **Pulse**.

## Set the redial options

If the printer was unable to send a fax because the receiving fax machine did not answer or was busy, the printer attempts to redial based on the settings for the redial options. Use the following procedure to turn the options on or off.

- **Busy redial**: If this option is turned on, the printer redials automatically if it receives a busy signal. The default is **On** .
- **No answer redial**: If this option is turned on, the printer redials automatically if the receiving fax machine does not answer. The default is **Off** .
- **Connection problem redial**: If this option is turned on, the printer redials automatically if there has been a problem connecting with the receiving fax machine. Connection problem redial works only for sending faxes from memory. The default is **On** .

**To set the redial options**

1. From the printer control panel display, touch **Fax** .
2. Touch **Setup** , and then touch **Preferences** .
3. Touch **Auto Redial** .
4. Touch **Busy Redial** , **No Answer Redial** , or **Connection Problem Redial** to switch it on or off.

## Set the fax speed

You can set the fax speed used to communicate between your printer and other fax machines when sending and receiving faxes.

If you use one of the following, setting the fax speed to a slower speed might be required:

- An Internet phone service
- A PBX (private branch exchange) system
- Fax on Voice over Internet Protocol (VoIP)
- An integrated services digital network (ISDN) service

If you experience problems sending and receiving faxes, try using a slower **Speed** . The following table provides the available fax speed settings.

| Fax speed setting | Fax speed |
|---|---|
| **Fast** | v.34 (33600 bps) |
| **Medium** | v.17 (14400 bps) |
| **Slow** | v.29 (9600 bps) |

**To set the fax speed**

1. From the printer control panel display, touch **Fax** .
2. Touch **Setup** , and then touch **Preferences** .
3. Touch **Speed** .
4. Touch to select an option.

## Set the fax sound volume

You can change the volume of fax sounds.

**To set the fax sound volume**

1. From the printer control panel display, touch **Fax** .
2. Touch **Setup** , and then touch **Preferences** .
3. Touch **Fax Volume**.
4. Touch to select **Soft**, **Loud**, or **Off** .

You may also access this feature by pressing  (the **Fax Status** button) on the Home screen.

# Fax and digital phone services

Many telephone companies provide their customers with digital phone services, such as the following:

- DSL: A Digital subscriber line (DSL) service through your telephone company. (DSL might be called ADSL in your country/region.)
- PBX: A private branch exchange (PBX) phone system.
- ISDN: An integrated services digital network (ISDN) system.
- VoIP: A low-cost phone service that allows you to send and receive faxes with your printer by using the Internet. This method is called Fax on Voice over Internet Protocol (VoIP).

  For more information, see Fax on Voice over Internet Protocol.

HP printers are designed specifically for use with traditional analog phone services. If you are in a digital phone environment (such as DSL/ADSL, PBX, or ISDN), you might need to use digital-to-analog filters or converters when setting up the printer for faxing.

**NOTE:** HP does not guarantee that the printer will be compatible with all digital service lines or providers, in all digital environments, or with all digital-to-analog converters. It is always recommended that you discuss with the telephone company directly for the correct setup options based on their line services provided.

# Fax on Voice over Internet Protocol

You might be able to subscribe to a low cost phone service that allows you to send and receive faxes with your printer by using the Internet. This method is called Fax on Voice over Internet Protocol (VoIP).

The following are indications you probably use a VoIP service.

- Dial a special access code along with the fax number.
- Have an IP converter box that connects to the Internet and provides analog phone ports for the fax connection.

**NOTE:** You can only send and receive faxes by connecting a phone cord to the port labeled "1-LINE" on the printer. This means that your connection to the Internet must be done either through a converter box (which supplies regular analog phone jacks for fax connections) or your telephone company.

**TIP:** Support for traditional fax transmission over any Internet protocol telephone systems are often limited. If you experience problems faxing, try using a slower fax speed or disabling the fax error-correction mode (ECM). However, if you turn off ECM, you cannot send and receive color faxes.

If you have questions about Internet faxing, contact your Internet faxing services support department or your local service provider for further assistance.

# Use reports

You can set up the printer to print error reports and confirmation reports automatically for each fax you send and receive. You can also manually print system reports as required; these reports provide useful system information about the printer.

By default, the printer is set to print a report only if there is a problem sending or receiving a fax. A confirmation message that indicates whether a fax was successfully sent appears briefly on the control panel display after each transaction.

**NOTE:** If the reports are not legible, you can check the estimated ink levels from the control panel or the HP software. For more information, see Check the estimated ink levels.

**NOTE:** Ink level alerts and indicators provide estimates for planning purposes only. When you receive a low-ink alert, consider having a replacement cartridge available to avoid possible printing delays. You do not need to replace the cartridges until the print quality becomes unacceptable.

**NOTE:** Ensure that the printheads and cartridges are in good conditions and installed properly. For more information, see Work with cartridges.

This section contains the following topics:

- Print fax confirmation reports
- Print fax error reports
- Print and view the fax log
- Clear the fax log
- Print the details of the last fax transaction
- Print a Caller ID Report
- View the Call History

## Print fax confirmation reports

You can print a confirmation report either when a fax is sent, or when any fax is sent or received. The default setting is **On (Fax Send)**. When turned off, a confirmation message appears briefly on the control panel after each fax is sent or received.

### To enable fax confirmation

1. From the printer control panel display, touch **Fax** .
2. Touch **Setup** .
3. Touch **Reports** and touch **Fax Confirmation** .
4. Touch to select one of the following options.

| | |
|---|---|
| **Off** | Does not print a fax confirmation report when you send and receive faxes successfully. This is the default setting. |
| **On (Fax Send)** | Prints a fax confirmation report for every fax you send. |
| **On (Fax Receive)** | Prints a fax confirmation report for every fax you receive. |
| **On (Fax Send and Fax Receive)** | Prints a fax confirmation report for every fax you send and receive. |

**To include an image of the fax on the report**

1. From the printer control panel display, touch **Fax** .
2. Touch **Setup** .
3. Touch **Reports** and touch **Fax Confirmation** .
4. Touch **On (Fax Send)** or **On (Fax Send and Fax Receive)** .
5. Touch **Fax confirmation with image**.

## Print fax error reports

You can configure the printer so that it automatically prints a report when there is an error during transmission or reception.

**To set the printer to print fax error reports automatically**

1. From the printer control panel display, touch **Fax** .
2. Touch **Setup** .
3. Touch **Reports** and touch **Fax Error Reports**.
4. Touch to select one of the following.

| | |
|---|---|
| **On (Fax Send and Fax Receive)** | Prints whenever a fax error occurs. |
| **Off** | Does not print any fax error reports. |
| **On (Fax Send)** | Prints whenever a transmission error occurs. This is the default setting. |
| **On (Fax Receive)** | Prints whenever a receiving error occurs. |

## Print and view the fax log

You can print a log of faxes that have been received and sent by the printer.

**To print the fax log from the printer control panel**

1. From the printer control panel display, touch **Fax** .
2. Touch **Setup** , and then touch **Reports** .
3. Touch **Print Fax Reports** .
4. Touch **Last 30 Transactions Fax Logs** .
5. Touch **Print** to begin printing.

## Clear the fax log

Clearing the fax log also deletes all faxes stored in memory.

**To clear the fax log**

1. From the printer control panel display, touch **Fax** .
2. Touch **Setup** , and then touch **Tools**.
3. Touch **Clear Fax Logs/Memory**.

## Print the details of the last fax transaction

The Last Fax Transaction report prints the details of the last fax transaction to occur. Details include the fax number, number of pages, and the fax status.

### To print the Last Fax Transaction report

1. From the printer control panel display, touch **Fax** .
2. Touch **Setup** , and then touch **Reports** .
3. Touch **Print Fax Reports** .
4. Touch **Last Transaction Log**.
5. Touch **Print** to begin printing.

## Print a Caller ID Report

You can print a list of Caller ID fax numbers.

### To print a Caller ID History Report

1. From the printer control panel display, touch **Fax** .
2. Touch **Setup** , and then touch **Reports** .
3. Touch **Print Fax Reports** .
4. Touch **Caller ID Report**.
5. Touch **Print** to begin printing.

## View the Call History

You can view a list of all the calls placed from the printer.

**NOTE:** You cannot print the call history.

### To view the call history

1. From the printer control panel display, touch **Fax** .
2. Touch **Send Now**.
3. Touch  ( **Phone book** ).
4. Touch  ( **Call history** ).

# Additional fax setup

After completing all the steps in the getting started guide, use the instructions in this section to complete your fax setup. Keep your getting started guide for later use.

In this section, you learn how to set up the printer so that faxing works successfully with equipment and services you might already have on the same phone line.

**TIP:** You can also use the Fax Setup Wizard (Windows) or HP Utility (OS X) to help you quickly set up some important fax settings such as the answer mode and fax header information. You can access these tools through the HP software you installed with the printer. After you run these tools, follow the procedures in this section to complete your fax setup.

This section contains the following topics:


- Set up faxing (parallel phone systems)
- Serial-type fax setup
- Test fax setup


## Set up faxing (parallel phone systems)

Before you begin setting up the printer for faxing, determine which kind of phone system your country/region uses. The instructions for fax setup differ depending on whether you have a serial- or parallel-type phone system.

- If you do not see your country/region listed in the table, you probably have a serial-type phone system. In a serial-type phone system, the connector type on your shared telephone equipment (modems, phones, and answering machines) does not allow a physical connection to the "2-EXT" port on the printer. Instead, all equipment must be connected at the telephone wall jack.

  **NOTE:** In some countries/regions that use serial-type phone systems, the phone cord that came with the printer might have an additional wall plug attached to it. This enables you to connect other telecom devices to the wall jack where you plug in the printer.

  You might need to connect the supplied phone cord to the adapter provided for your country/region.

- If your country/region is listed in the table, you probably have a parallel-type telephone system. In a parallel-type phone system, you are able to connect shared telephone equipment to the phone line by using the "2-EXT" port on the back of the printer.

  **NOTE:** If you have a parallel-type phone system, HP recommends you use the 2-wire phone cord supplied with the printer to connect it to the telephone wall jack.

**Table 5-1 Countries/regions with a parallel-type phone system**

| | | |
|---|---|---|
| Argentina | Australia | Brazil |
| Canada | Chile | China |
| Colombia | Greece | India |
| Indonesia | Ireland | Japan |
| Korea | Latin America | Malaysia |
| Mexico | Philippines | Poland |
| Portugal | Russia | Saudi Arabia |
| Singapore | Spain | Taiwan |
| Thailand | USA | Venezuela |
| Vietnam | | |

If you are unsure which kind of telephone system you have (serial or parallel), check with your telephone company.

This section contains the following topics:


- Select the correct fax setup for your home or office
- Case A: Separate fax line (no voice calls received)
- Case B: Set up the printer with DSL
- Case C: Set up the printer with a PBX phone system or an ISDN line
- Case D: Fax with a distinctive ring service on the same line
- Case E: Shared voice/fax line
- Case F: Shared voice/fax line with voice mail
- Case G: Fax line shared with computer modem (no voice calls received)
- Case H: Shared voice/fax line with computer modem
- Case I: Shared voice/fax line with answering machine
- Case J: Shared voice/fax line with computer modem and answering machine
- Case K: Shared voice/fax line with computer dial-up modem and voice mail


## Select the correct fax setup for your home or office

To fax successfully, you need to know what types of equipment and services (if any) share the same phone line with the printer. This is important because you might need to connect some of your existing office equipment directly to the printer, and you might also need to change some fax settings before you can fax successfully.

1. Determine if your telephone system is serial or parallel.

   For more information, see Set up faxing (parallel phone systems).

   a. Serial-type telephone system—See Serial-type fax setup.

   b. Parallel-type telephone system—Go to step 2.

2. Select the combination of equipment and services sharing your fax line.

   - DSL: A Digital subscriber line (DSL) service through your telephone company. (DSL might be called ADSL in your country/region.)
   - PBX: A private branch exchange (PBX) phone system.
   - ISDN: An integrated services digital network (ISDN) system.
   - Distinctive ring service: A distinctive ring service through your telephone company provides multiple telephone numbers with different ring patterns.
   - Voice calls: Voice calls are received at the same phone number you use for fax calls on the printer.
   - Computer dial-up modem: A computer dial-up modem is on the same phone line as the printer. If you answer Yes to any of the following questions, you are using a computer dial-up modem:
     - Do you send and receive faxes directly to and from your computer software applications through a dial-up connection?
     - Do you send and receive email messages on your computer through a dial-up connection?
     - Do you access the Internet from your computer through a dial-up connection?

- Answering machine: An answering machine that answers voice calls at the same phone number you use for fax calls on the printer.
- Voice mail service: A voice mail subscription through your telephone company at the same number you use for fax calls on the printer.

3. From the following table, select the combination of equipment and services applicable to your home or office setting. Then look up the recommended fax setup. Step-by-step instructions are included for each case in the sections that follow.

**NOTE:** If your home or office setup is not described in this section, set up the printer as you would a regular analog phone. Make sure you use the phone cord supplied in the box to connect one end to your telephone wall jack and the other end to the port labeled 1-LINE on the back of the printer. If you use another phone cord, you might experience problems sending and receiving faxes.

You might need to connect the supplied phone cord to the adapter provided for your country/region.

| Other equipment or services sharing your fax line | | | | | | | Recommended fax setup |
|---|---|---|---|---|---|---|---|
| DSL | PBX | Distinctive ring service | Voice calls | Computer dial-up modem | Answering machine | Voice mail service | |
| | | | | | | | Case A: Separate fax line (no voice calls received) |
| ✓ | | | | | | | Case B: Set up the printer with DSL |
| | ✓ | | | | | | Case C: Set up the printer with a PBX phone system or an ISDN line |
| | | ✓ | | | | | Case D: Fax with a distinctive ring service on the same line |
| | | | ✓ | | | | Case E: Shared voice/fax line |
| | | | ✓ | | | ✓ | Case F: Shared voice/fax line with voice mail |
| | | | | ✓ | | | Case G: Fax line shared with computer modem (no voice calls received) |
| | | | ✓ | ✓ | | | Case H: Shared voice/fax line with computer modem |
| | | | ✓ | | ✓ | | Case I: Shared voice/fax line with answering machine |
| | | | ✓ | ✓ | ✓ | | Case J: Shared voice/fax line with computer modem and answering machine |
| | | | ✓ | ✓ | | ✓ | Case K: Shared voice/fax line with computer dial-up modem and voice mail |

## Case A: Separate fax line (no voice calls received)

If you have a separate phone line on which you receive no voice calls, and you have no other equipment connected on this phone line, set up the printer as described in this section.

**Figure 5-1** Back view of the printer

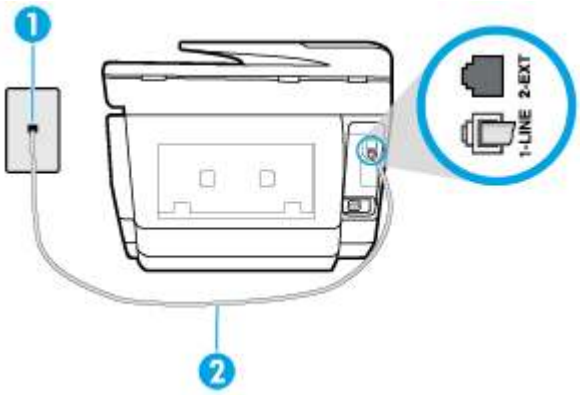


| | |
|---|---|
| 1 | Telephone wall jack |
| 2 | Use the phone cord supplied in the box with the printer to connect to the 1-LINE port.<br>You might need to connect the supplied phone cord to the adapter provided for your country/region. |

**To set up the printer with a separate fax line**

1. Using the phone cord supplied in the box with the printer, connect one end to your telephone wall jack, then connect the other end to the port labeled 1-LINE on the back of the printer.

   **NOTE:** You might need to connect the supplied phone cord to the adapter provided for your country/region.

   If you do not use the supplied cord to connect from the telephone wall jack to the printer, you might not be able to fax successfully. This special phone cord is different from the phone cords you might already have in your home or office.

2. Turn on the **Auto Answer** setting.
3. (Optional) Change the **Rings to Answer** setting to the lowest setting (two rings).
4. Run a fax test.

When the phone rings, the printer answers automatically after the number of rings you set in the **Rings to Answer** setting. The printer begins emitting fax reception tones to the sending fax machine and receives the fax.

## Case B: Set up the printer with DSL

If you have a DSL service through your telephone company, and do not connect any equipment to the printer, use the instructions in this section to connect a DSL filter between the telephone wall jack and the printer. The DSL filter removes the digital signal that can interfere with the printer, so the printer can communicate correctly with the phone line. (DSL might be called ADSL in your country/region.)

**NOTE:** If you have a DSL line and you do not connect the DSL filter, you cannot send and receive faxes with the printer.

**Figure 5-2** Back view of the printer

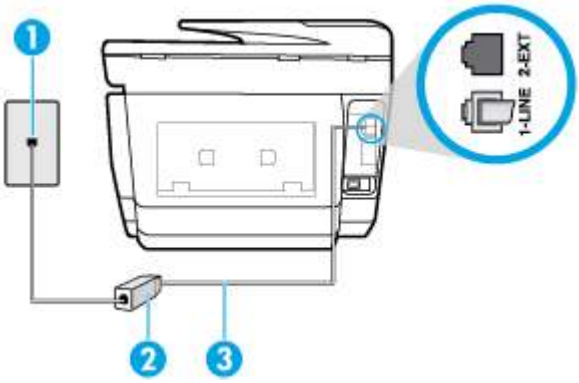


| | |
|---|---|
| 1 | Telephone wall jack |
| 2 | DSL (or ADSL) filter and cord supplied by your DSL provider |
| 3 | Use the phone cord supplied in the box with the printer to connect to the 1-LINE port.<br>You might need to connect the supplied phone cord to the adapter provided for your country/region. |

**To set up the printer with DSL**

1. Obtain a DSL filter from your DSL provider.
2. Use the phone cord supplied in the box with the printer, connect one end to the open port on the DSL filter, and then connect the other end to the port labeled 1-LINE on the back of the printer.

   **NOTE:** You might need to connect the supplied phone cord to the adapter provided for your country/region.

   If you do not use the supplied cord to connect from the DSL filter to the printer, you might not be able to fax successfully. This special phone cord is different from the phone cords you might already have in your home or office.

   As only one phone cord is supplied, you might need to obtain additional phone cords for this setup.
3. Connect an additional phone cord from the DSL filter to the telephone wall jack.
4. Run a fax test.

If you encounter problems setting up the printer with optional equipment, contact your local service provider or vendor for further assistance.

## Case C: Set up the printer with a PBX phone system or an ISDN line

If you are using either a PBX phone system or an ISDN converter/terminal adapter, make sure you do the following:

- If you are using either a PBX or an ISDN converter/terminal adaptor, connect the printer to the port that is designated for fax and phone use. Also, make sure that the terminal adapter is set to the correct switch type for your country/region, if possible.

**NOTE:** Some ISDN systems allow you to configure the ports for specific phone equipment. For example, you might have assigned one port for telephone and Group 3 fax and another port for multiple purposes. If you have problems when connected to the fax/phone port of your ISDN converter, try using the port designated for multiple purposes; it might be labeled "multi-combi" or something similar.

- If you are using a PBX phone system, set the call waiting tone to "off."

**NOTE:** Many digital PBX systems include a call-waiting tone that is set to "on" by default. The call waiting tone interferes with any fax transmission, and you cannot send or receive faxes with the printer. Refer to the documentation that came with your PBX phone system for instructions on how to turn off the call-waiting tone.

- If you are using a PBX phone system, dial the number for an outside line before dialing the fax number.
- Make sure you use the supplied cord to connect from the telephone wall jack to the printer. If you do not, you might not be able to fax successfully. This special phone cord is different from the phone cords you might already have in your home or office. If the supplied phone cord is too short, you can purchase a longer 2-wire phone cord from your local electronics store and extend it.

  You might need to connect the supplied phone cord to the adapter provided for your country/region.

If you encounter problems setting up the printer with optional equipment, contact your local service provider or vendor for further assistance.

## Case D: Fax with a distinctive ring service on the same line

If you subscribe to a distinctive ring service (through your telephone company) that allows you to have multiple phone numbers on one phone line, each with a different ring pattern, set up the printer as described in this section.

**Figure 5-3** Back view of the printer

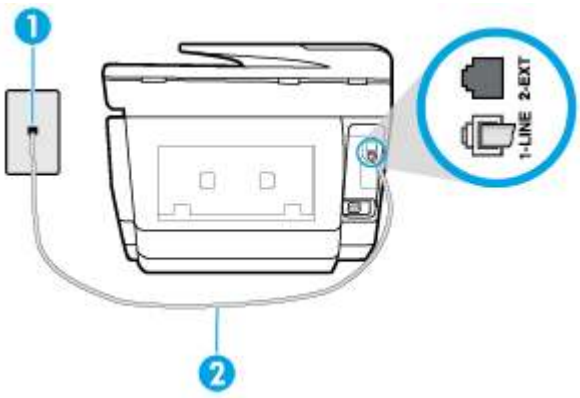


| | |
|---|---|
| 1 | Telephone wall jack |
| 2 | Use the phone cord supplied in the box with the printer to connect to the 1-LINE port.<br>You might need to connect the supplied phone cord to the adapter provided for your country/region. |

### To set up the printer with a distinctive ring service

1. Using the phone cord supplied in the box with the printer, connect one end to your telephone wall jack, then connect the other end to the port labeled 1-LINE on the back of the printer.

**NOTE:** You might need to connect the supplied phone cord to the adapter provided for your country/region.

If you do not use the supplied cord to connect from the telephone wall jack to the printer, you might not be able to fax successfully. This special phone cord is different from the phone cords you might already have in your home or office.

2. Turn on the **Auto Answer** setting.
3. Change the **Distinctive Ring** setting to match the pattern that the telephone company assigned to your fax number.

**NOTE:** By default, the printer is set to answer all ring patterns. If you do not set the **Distinctive Ring** to match the ring pattern assigned to your fax number, the printer might answer both voice calls and fax calls or it might not answer at all.

**TIP:** You can also use the Ring Pattern Detection feature in the printer control panel to set distinctive ring. With this feature, the printer recognizes and records the ring pattern of an incoming call and, based on this call, automatically determines the distinctive ring pattern assigned by your telephone company to fax calls. For more information, see Change the answer ring pattern for distinctive ring.

4. (Optional) Change the **Rings to Answer** setting to the lowest setting (two rings).
5. Run a fax test.

The printer automatically answers incoming calls that have the ring pattern you selected ( **Distinctive Ring** setting) after the number of rings you selected ( **Rings to Answer** setting). The printer begins emitting fax reception tones to the sending fax machine and receives the fax.

If you encounter problems setting up the printer with optional equipment, contact your local service provider or vendor for further assistance.

## Case E: Shared voice/fax line

If you receive both voice calls and fax calls at the same phone number, and you have no other office equipment (or voice mail) on this phone line, set up the printer as described in this section.

**Figure 5-4** Back view of the printer

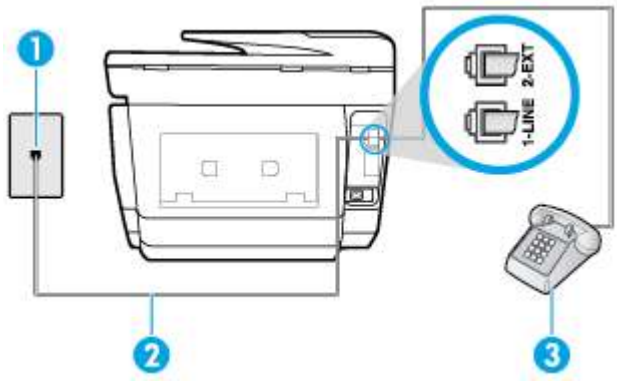


| | |
|---|---|
| 1 | Telephone wall jack |
| 2 | Use the phone cord supplied in the box with the printer to connect to the 1-LINE port.<br>You might need to connect the supplied phone cord to the adapter provided for your country/region. |
| 3 | Telephone (optional) |

**To set up the printer with a shared voice/fax line**

1. Using the phone cord supplied in the box with the printer, connect one end to your telephone wall jack, then connect the other end to the port labeled 1-LINE on the back of the printer.

   **NOTE:** You might need to connect the supplied phone cord to the adapter provided for your country/region.

   If you do not use the supplied cord to connect from the telephone wall jack to the printer, you might not be able to fax successfully. This special phone cord is different from the phone cords you might already have in your home or office.

2. Do one of the following:

   - If you have a parallel-type phone system, remove the white plug from the port labeled 2-EXT on the back of the printer, and then connect a phone to this port.
   - If you have a serial-type phone system, you might plug your phone directly on top of the printer cable which has a wall plug attached to it.

3. Now you need to decide how you want the printer to answer calls, automatically or manually:

   - If you set up the printer to answer calls **automatically**, it answers all incoming calls and receives faxes. The printer cannot distinguish between fax and voice calls in this case; if you suspect the call is a voice call, you need to answer it before the printer answers the call. To set up the printer to answer calls automatically, turn on the **Auto Answer** setting.
   - If you set up the printer to answer faxes **manually**, you must be available to respond in person to incoming fax calls or the printer cannot receive faxes. To set up the printer to answer calls manually, turn off the **Auto Answer** setting.

4. Run a fax test.

If you pick up the phone before the printer answers the call and hear fax tones from a sending fax machine, you need to answer the fax call manually.

If you encounter problems setting up the printer with optional equipment, contact your local service provider or vendor for further assistance.

## Case F: Shared voice/fax line with voice mail

If you receive both voice calls and fax calls at the same phone number, and you also subscribe to a voice mail service through your telephone company, set up the printer as described in this section.

**NOTE:** You cannot receive faxes automatically if you have a voice mail service at the same phone number you use for fax calls. You must receive faxes manually; this means you must be available to respond in person to incoming fax calls. If you want to receive faxes automatically instead, contact your telephone company to subscribe to a distinctive ring service, or to obtain a separate phone line for faxing.

**Figure 5-5** Back view of the printer

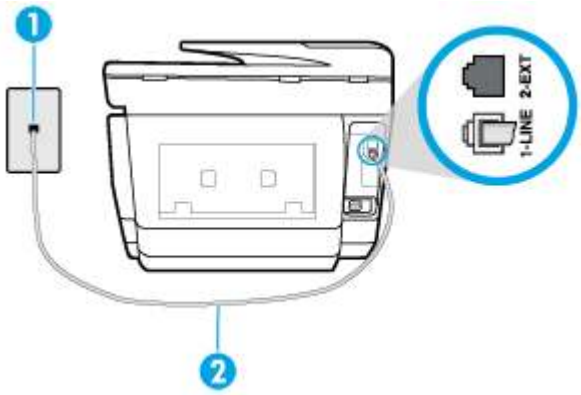


| | |
|---|---|
| 1 | Telephone wall jack |
| 2 | Use the phone cord supplied in the box with the printer to connect to the 1-LINE port.<br>You might need to connect the supplied phone cord to the adapter provided for your country/region. |

**To set up the printer with voice mail**

1. Using the phone cord supplied in the box with the printer, connect one end to your telephone wall jack, then connect the other end to the port labeled 1-LINE on the back of the printer.

   You might need to connect the supplied phone cord to the adapter provided for your country/region.

   **NOTE:** You might need to connect the supplied phone cord to the adapter provided for your country/region.

   If you do not use the supplied cord to connect from the telephone wall jack to the printer, you might not be able to fax successfully. This special phone cord is different from the phone cords you might already have in your home or office.

2. Turn off the **Auto Answer** setting.
3. Run a fax test.

You must be available to respond in person to incoming fax calls, or the printer cannot receive faxes. You must initiate the manual fax before voicemail picks up the line.

If you encounter problems setting up the printer with optional equipment, contact your local service provider or vendor for further assistance.

## Case G: Fax line shared with computer modem (no voice calls received)

If you have a fax line on which you receive no voice calls, and you also have a computer modem connected on this line, set up the printer as described in this section.

**NOTE:** If you have a computer dial-up modem, your computer dial-up modem shares the phone line with the printer. You cannot use both your modem and the printer simultaneously. For example, you cannot use the printer for faxing while you are using your computer dial-up modem to send an email or access the Internet.

- Set up the printer with a computer dial-up modem
- Set up the printer with a computer DSL/ADSL modem

### Set up the printer with a computer dial-up modem

If you are using the same phone line for sending faxes and for a computer dial-up modem, follow these directions for setting up the printer.

**Figure 5-6** Back view of the printer

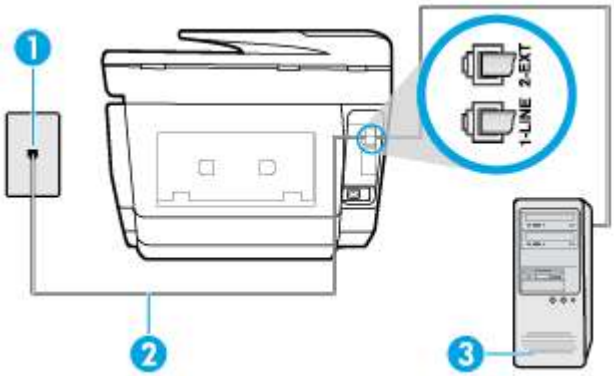


| | |
|---|---|
| 1 | Telephone wall jack |
| 2 | Use the phone cord supplied in the box with the printer to connect to the 1-LINE port.<br>You might need to connect the supplied phone cord to the adapter provided for your country/region. |
| 3 | Computer with modem |

### To set up the printer with a computer dial-up modem

1. Remove the white plug from the port labeled 2-EXT on the back of the printer.
2. Find the phone cord that connects from the back of your computer (your computer dial-up modem) to a telephone wall jack. Disconnect the cord from the telephone wall jack and plug it into the port labeled 2-EXT on the back of the printer.
3. Using the phone cord supplied in the box with the printer, connect one end to your telephone wall jack, then connect the other end to the port labeled 1-LINE on the back of the printer.

**NOTE:** You might need to connect the supplied phone cord to the adapter provided for your country/region.

If you do not use the supplied cord to connect from the telephone wall jack to the printer, you might not be able to fax successfully. This special phone cord is different from the phone cords you might already have in your home or office.

4. If your modem software is set to receive faxes to your computer automatically, turn off that setting.

**NOTE:** If you do not turn off the automatic fax reception setting in your modem software, the printer cannot receive faxes.

5. Turn on the **Auto Answer** setting.
6. (Optional) Change the **Rings to Answer** setting to the lowest setting (two rings).
7. Run a fax test.

When the phone rings, the printer automatically answers after the number of rings you set in the **Rings to Answer** setting. The printer begins emitting fax reception tones to the sending fax machine and receives the fax.

If you encounter problems setting up the printer with optional equipment, contact your local service provider or vendor for further assistance.

### Set up the printer with a computer DSL/ADSL modem

If you have a DSL line and use that phone line to send faxes, follow these instructions to set up your fax.

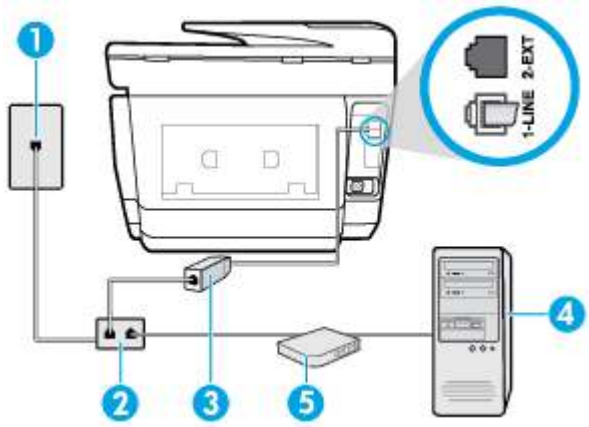


| | |
|---|---|
| 1 | Telephone wall jack |
| 2 | Parallel splitter |
| 3 | DSL/ADSL filter<br><br>Connect one end of the phone jack that was supplied with the printer to connect to the 1-LINE port on the back of the printer. Connect the other end of the cord to the DSL/ADSL filter.<br><br>You might need to connect the supplied phone cord to the adapter provided for your country/region. |
| 4 | Computer |
| 5 | Computer DSL/ADSL modem |

**NOTE:** You need to purchase a parallel splitter. A parallel splitter has one RJ-11 port on the front and two RJ-11 ports on the back. Do not use a 2–line phone splitter, a serial splitter, or a parallel splitter which has two RJ-11 ports on the front and a plug on the back.

**Figure 5-7** Example of a parallel splitter



### To set up the printer with a computer DSL/ADSL modem

1. Obtain a DSL filter from your DSL provider.
2. Using the phone cord provided in the box with the printer, connect one end to the DSL filter, and then connect the other end to the port labeled 1-LINE on the back of the printer.

   **NOTE:** You might need to connect the supplied phone cord to the adapter provided for your country/region.

   If you do not use the supplied cord to connect from the DSL filter to the back of the printer, you might not be able to fax successfully. This special phone cord is different from the phone cords you might already have in your home or office.

3. Connect the DSL filter to the parallel splitter.
4. Connect the DSL modem to the parallel splitter.
5. Connect the parallel splitter to the wall jack.
6. Run a fax test.

When the phone rings, the printer automatically answers after the number of rings you set in the **Rings to Answer** setting. The printer begins emitting fax reception tones to the sending fax machine and receives the fax.

If you encounter problems setting up the printer with optional equipment, contact your local service provider or vendor for further assistance.

## Case H: Shared voice/fax line with computer modem

There are two different ways to set up the printer with your computer based on the number of phone ports on your computer. Before you begin, check your computer to see if it has one or two phone ports.

**NOTE:** If your computer has only one phone port, you need to purchase a parallel splitter (also called a coupler), as shown in the illustration. (A parallel splitter has one RJ-11 port on the front and two RJ-11 ports on the back. Do not use a two-line phone splitter, a serial splitter, or a parallel splitter which has two RJ-11 ports on the front and a plug on the back.)

- Shared voice/fax with computer dial-up modem
- Shared voice/fax with computer DSL/ADSL modem

### Shared voice/fax with computer dial-up modem

If you use your phone line for both fax and telephone calls, use these instructions to set up your fax.

There are two different ways to set up the printer with your computer based on the number of phone ports on your computer. Before you begin, check your computer to see if it has one or two phone ports.

**NOTE:** If your computer has only one phone port, you need to purchase a parallel splitter (also called a coupler), as shown in the illustration. (A parallel splitter has one RJ-11 port on the front and two RJ-11 ports on the back. Do not use a two-line phone splitter, a serial splitter, or a parallel splitter which has two RJ-11 ports on the front and a plug on the back.)

**Figure 5-8** Example of a parallel splitter



**Figure 5-9** Back view of the printer

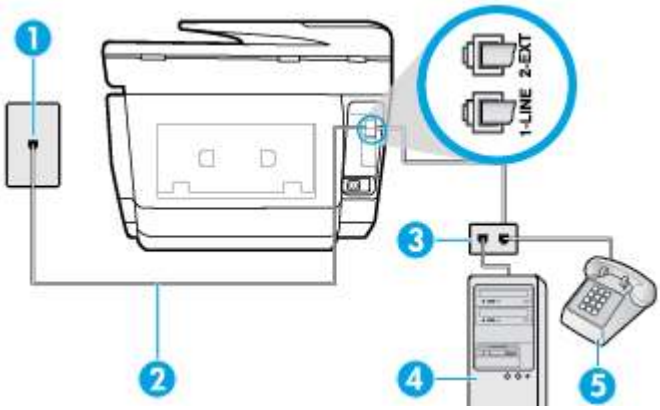


| | |
|---|---|
| 1 | Telephone wall jack |
| 2 | Use the phone cord supplied in the box with the printer to connect to the 1-LINE port. |
| 3 | Parallel splitter |
| 4 | Computer with modem |
| 5 | Telephone |

### To set up the printer on the same phone line as a computer with two phone ports

1. Remove the white plug from the port labeled 2-EXT on the back of the printer.
2. Find the phone cord that connects from the back of your computer (your computer dial-up modem) to a telephone wall jack. Disconnect the cord from the telephone wall jack and plug it into the port labeled 2-EXT on the back of the printer.
3. Connect a phone to the "OUT" port on the back of your computer dial-up modem.
4. Use the phone cord supplied in the box with the printer, connect one end to your telephone wall jack, then connect the other end to the port labeled 1-LINE on the back of the printer.

   **NOTE:** You might need to connect the supplied phone cord to the adapter provided for your country/region.

   If you do not use the supplied cord to connect from the telephone wall jack to the printer, you might not be able to fax successfully. This special phone cord is different from the phone cords you might already have in your home or office.

5. If your modem software is set to receive faxes to your computer automatically, turn off that setting.

   **NOTE:** If you do not turn off the automatic fax reception setting in your modem software, the printer cannot receive faxes.

6. Now you need to decide how you want the printer to answer calls, automatically or manually:

   - If you set up the printer to answer calls **automatically**, it answers all incoming calls and receives faxes. The printer cannot distinguish between fax and voice calls in this case; if you suspect the call

is a voice call, you need to answer it before the printer answers the call. To set up the printer to answer calls automatically, turn on the **Auto Answer** setting.

- If you set up the printer to answer faxes **manually**, you must be available to respond in person to incoming fax calls or the printer cannot receive faxes. To set up the printer to answer calls manually, turn off the **Auto Answer** setting.

7. Run a fax test.

If you pick up the phone before the printer answers the call and hear fax tones from a sending fax machine, you need to answer the fax call manually.

If you use your phone line for voice, fax, and your computer dial-up modem, follow these directions to set up your fax.

If you encounter problems setting up the printer with optional equipment, contact your local service provider or vendor for further assistance.

### Shared voice/fax with computer DSL/ADSL modem

Use these instructions if your computer has a DSL/ADSL modem

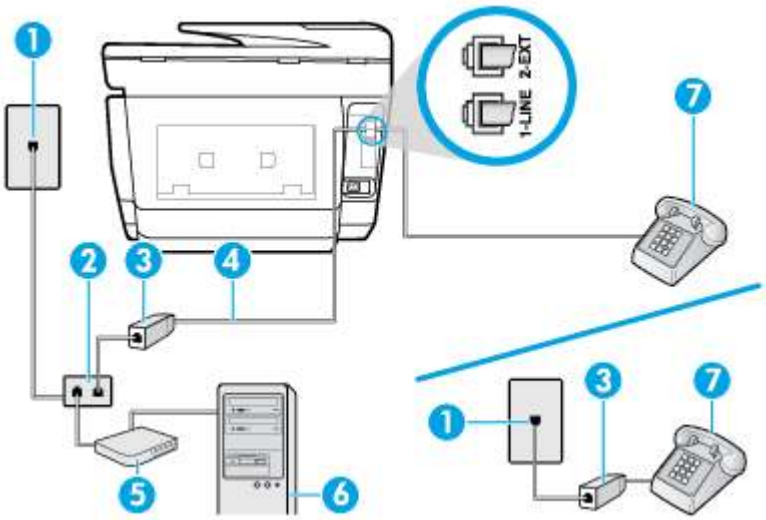


| | |
|---|---|
| 1 | Telephone wall jack |
| 2 | Parallel splitter |
| 3 | DSL/ADSL filter |
| 4 | Use the phone cord provided to connect to the 1-LINE port on the back of the printer.<br>You might need to connect the supplied phone cord to the adapter provided for your country/region. |
| 5 | DSL/ADSL modem |
| 6 | Computer |
| 7 | Telephone |

**NOTE:** You need to purchase a parallel splitter. A parallel splitter has one RJ-11 port on the front and two RJ-11 ports on the back. Do not use a 2–line phone splitter, a serial splitter, or a parallel splitter which has two RJ-11 ports on the front and a plug on the back.

**Figure 5-10** Example of a parallel splitter



**To set up the printer with a computer DSL/ADSL modem**

1. Obtain a DSL filter from your DSL provider.

   **NOTE:** Phones in other parts of the home/office sharing the same phone number with DSL service need to be connected to additional DSL filters to avoid noise when making voice calls.

2. Using the phone cord supplied in the box with the printers, connect one end to the DSL filter, then connect the other end to the port labeled 1-LINE on the back of the printer.

   **NOTE:** You might need to connect the supplied phone cord to the adapter provided for your country/region.

   If you do not use the supplied cord to connect from the DSL filter to the printer, you might not be able to fax successfully. This special phone cord is different from phone cords you might already have in your home or office.

3. If you have a parallel-type phone system, remove the white plug from the port labeled 2-EXT on the back of the printer, and then connect a phone to this port.
4. Connect the DSL filter to the parallel splitter.
5. Connect the DSL modem to the parallel splitter.
6. Connect the parallel splitter to the wall jack.
7. Run a fax test.

When the phone rings, the printer automatically answers after the number of rings you set in the **Rings to Answer** setting. The printer begins emitting fax reception tones to the sending fax machine and receives the fax.

If you encounter problems setting up the printer with optional equipment, contact your local service provider or vendor for further assistance.

## Case I: Shared voice/fax line with answering machine

If you receive both voice calls and fax calls at the same phone number, and you also have an answering machine that answers voice calls at this phone number, set up the printer as described in this section.

**Figure 5-11** Back view of the printer

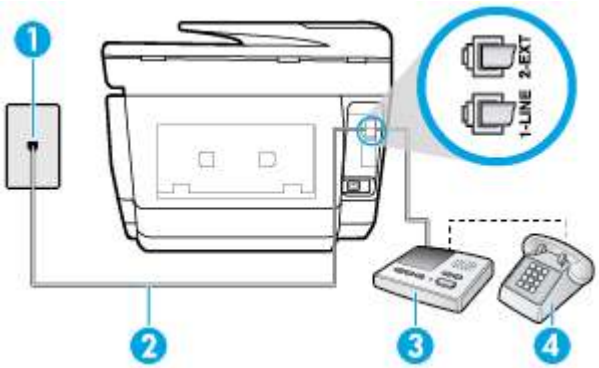

| | |
|---|---|
| 1 | Telephone wall jack |
| 2 | Use the phone cord provided to connect to the 1-LINE port on the back of the printer<br>You might need to connect the supplied phone cord to the adapter provided for your country/region. |
| 3 | Answering machine |
| 4 | Telephone (optional) |

**To set up the printer with a shared voice/fax line with answering machine**

1. Remove the white plug from the port labeled 2-EXT on the back of the printer.
2. Unplug your answering machine from the telephone wall jack, and connect it to the port labeled 2-EXT on the back of the printer.

   **NOTE:** If you do not connect your answering machine directly to the printer, fax tones from a sending fax machine might be recorded on your answering machine, and you might not receive faxes with the printer.
3. Use the phone cord supplied in the box with the printer, connect one end to your telephone wall jack, then connect the other end to the port labeled 1-LINE on the back of the printer.

   **NOTE:** You might need to connect the supplied phone cord to the adapter provided for your country/region.

   If you do not use the supplied cord to connect from the telephone wall jack to the printer, you might not be able to fax successfully. This special phone cord is different from the phone cords you might already have in your home or office.
4. (Optional) If your answering machine does not have a built-in phone, for convenience you might want to connect a phone to the back of your answering machine at the "OUT" port.

   **NOTE:** If your answering machine does not let you connect an external phone, you can purchase and use a parallel splitter (also known as a coupler) to connect both the answering machine and telephone to the printer. You can use standard phone cords for these connections.
5. Turn on the **Auto Answer** setting.
6. Set your answering machine to answer after a low number of rings.
7. Change the **Rings to Answer** setting on the printer to the maximum number of rings supported by your printer. (The maximum number of rings varies by country/region.)
8. Run a fax test.

When the phone rings, your answering machine answers after the number of rings you have set, and then plays your recorded greeting. The printer monitors the call during this time, "listening" for fax tones. If incoming fax tones are detected, the printer emits fax reception tones and receives the fax; if there are no fax tones, the printer stops monitoring the line and your answering machine can record a voice message.

If you encounter problems setting up the printer with optional equipment, contact your local service provider or vendor for further assistance.

## Case J: Shared voice/fax line with computer modem and answering machine

If you receive both voice calls and fax calls at the same phone number, and you also have a computer modem and answering machine connected on this phone line, set up the printer as described in this section.

**NOTE:** Since your computer dial-up modem shares the phone line with the printer, you cannot use both your modem and the printer simultaneously. For example, you cannot use the printer for faxing while you are using your computer dial-up modem to send an email or access the Internet.

- Shared voice/fax line with computer dial-up modem and answering machine
- Shared voice/fax line with computer DSL/ADSL modem and answering machine

### Shared voice/fax line with computer dial-up modem and answering machine

There are two different ways to set up the printer with your computer based on the number of phone ports on your computer. Before you begin, check your computer to see if it has one or two phone ports.

**NOTE:** If your computer has only one phone port, you need to purchase a parallel splitter (also called a coupler), as shown in the illustration. (A parallel splitter has one RJ-11 port on the front and two RJ-11 ports on the back. Do not use a two-line phone splitter, a serial splitter, or a parallel splitter which has two RJ-11 ports on the front and a plug on the back.)

**Figure 5-12** Example of a parallel splitter



**Figure 5-13** Back view of the printer

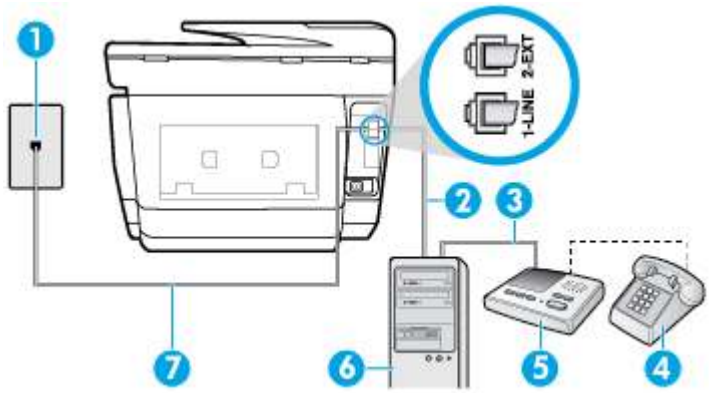


| | |
|---|---|
| 1 | Telephone wall jack |
| 2 | "IN" phone port on your computer |
| 3 | "OUT" phone port on your computer |
| 4 | Telephone (optional) |
| 5 | Answering machine |
| 6 | Computer with modem |
| 7 | Use the phone cord supplied in the box with the printer to connect to the 1-LINE port.<br>You might need to connect the supplied phone cord to the adapter provided for your country/region. |

**To set up the printer on the same phone line as a computer with two phone ports**

1. Remove the white plug from the port labeled 2-EXT on the back of the printer.
2. Find the phone cord that connects from the back of your computer (your computer dial-up modem) to a telephone wall jack. Disconnect the cord from the telephone wall jack and plug it into the port labeled 2-EXT on the back of the printer.
3. Unplug your answering machine from the telephone wall jack, and connect it to the port labeled "OUT" on the back of the computer (the computer dial-up modem).
4. Use the phone cord supplied in the box with the printer, connect one end to your telephone wall jack, then connect the other end to the port labeled 1-LINE on the back of the printer.

   **NOTE:** You might need to connect the supplied phone cord to the adapter provided for your country/region.

   If you do not use the supplied cord to connect from the telephone wall jack to the printer, you might not be able to fax successfully. This special phone cord is different from the phone cords you might already have in your home or office.
5. (Optional) If your answering machine does not have a built-in phone, for convenience you might want to connect a phone to the back of your answering machine at the "OUT" port.

   **NOTE:** If your answering machine does not let you connect an external phone, you can purchase and use a parallel splitter (also known as a coupler) to connect both the answering machine and telephone to the printer. You can use standard phone cords for these connections.
6. If your modem software is set to receive faxes to your computer automatically, turn off that setting.

   **NOTE:** If you do not turn off the automatic fax reception setting in your modem software, the printer cannot receive faxes.
7. Turn on the **Auto Answer** setting.
8. Set your answering machine to answer after a low number of rings.
9. Change the **Rings to Answer** setting on the printer to the maximum number of rings supported by the product. (The maximum number of rings varies by country/region.)
10. Run a fax test.

When the phone rings, your answering machine answers after the number of rings you have set, and then plays your recorded greeting. The printer monitors the call during this time, "listening" for fax tones. If incoming fax tones are detected, the printer emits fax reception tones and receives the fax; if there are no fax tones, the printer stops monitoring the line and your answering machine can record a voice message.

If you encounter problems setting up the printer with optional equipment, contact your local service provider or vendor for further assistance.

### Shared voice/fax line with computer DSL/ADSL modem and answering machine

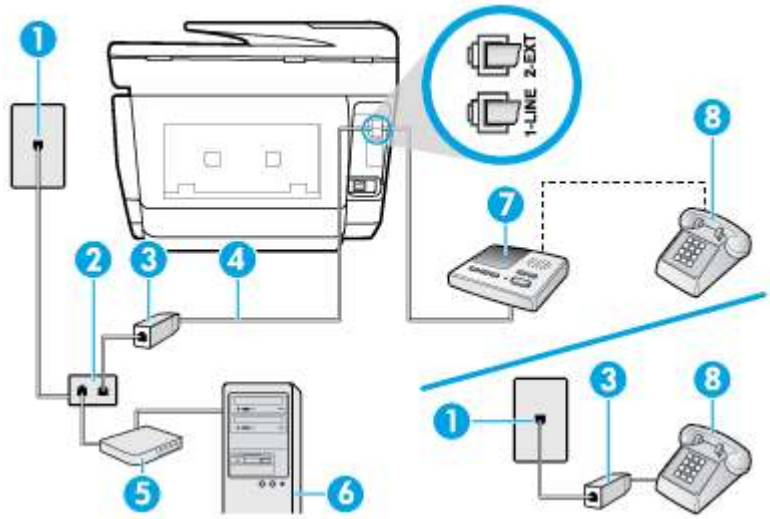


| | |
|---|---|
| 1 | Telephone wall jack |
| 2 | Parallel splitter |
| 3 | DSL/ADSL filter |
| 4 | Phone cord provided with the printer connected to the 1-LINE port on the back of the printer<br>You might need to connect the supplied phone cord to the adapter provided for your country/region. |
| 5 | DSL/ADSL modem |
| 6 | Computer |
| 7 | Answering machine |
| 8 | Telephone (optional) |

**NOTE:** You need to purchase a parallel splitter. A parallel splitter has one RJ-11 port on the front and two RJ-11 ports on the back. Do not use a 2–line phone splitter, a serial splitter, or a parallel splitter which has two RJ-11 ports on the front and a plug on the back.

**Figure 5-14** Example of a parallel splitter



### To set up the printer with a computer DSL/ADSL modem

1. Obtain a DSL/ADSL filter from your DSL/ADSL provider.

**NOTE:** Phones in other parts of the home/office sharing the same phone number with DSL/ADSL service need to be connected to additional DSL/ADSL filters, to avoid noise when making voice calls.

2. Using the phone cord supplied in the box with the printer, connect one end to the DSL/ADSL filter, then connect the other end to the port labeled 1-LINE on the back of the printer.

**NOTE:** You might need to connect the supplied phone cord to the adapter provided for your country/region.

If you do not use the supplied cord to connect from the DSL/ADSL filter to the printer, you might not be able to fax successfully. This special phone cord is different from the phone cords you might already have in your home or office.

3. Connect the DSL/ADSL filter to the splitter.
4. Unplug the answering machine from the telephone wall jack, and connect it to the port labeled 2-EXT on the back of the printer.

**NOTE:** If you do not connect your answering machine directly to the printer, fax tones from a sending fax machine might be recorded on your answering machine, and you might not receive faxes with the printer.

5. Connect the DSL modem to the parallel splitter.
6. Connect the parallel splitter to the wall jack.
7. Set your answering machine to answer after a low number of rings.
8. Change your **Rings to Answer** setting on the printer to the maximum number of rings supported by the printer.

**NOTE:** The maximum number of rings varies by country/region.

9. Run a fax test.

When the phone rings, your answering machine answers after the number of rings you have set, and then play your recorded greeting. The printer monitors the call during this time, “listening” for fax tones. If incoming fax tones are detected, the printer emits fax reception tones and receive the fax; if there are no fax tones, the printer stops monitoring the line and your answering machine can record a voice message.

If you use the same phone line for telephone, fax, and have a computer DSL modem, follow these instructions to set up your fax.

If you encounter problems setting up the printer with optional equipment, contact your local service provider or vendor for further assistance.

## Case K: Shared voice/fax line with computer dial-up modem and voice mail

If you receive both voice calls and fax calls at the same phone number, use a computer dial-up modem on the same phone line, and subscribe to a voice mail service through your telephone company, set up the printer as described in this section.

**NOTE:** You cannot receive faxes automatically if you have a voice mail service at the same phone number you use for fax calls. You must receive faxes manually; this means you must be available to respond in person to incoming fax calls. If you want to receive faxes automatically instead, contact your telephone company to subscribe to a distinctive ring service, or to obtain a separate phone line for faxing.

Since your computer dial-up modem shares the phone line with the printer, you cannot use both your modem and the printer simultaneously. For example, you cannot use the printer for faxing if you are using your computer dial-up modem to send an email or access the Internet.

There are two different ways to set up the printer with your computer based on the number of phone ports on your computer. Before you begin, check your computer to see if it has one or two phone ports.

- If your computer has only one phone port, you need to purchase a parallel splitter (also called a coupler), as shown in the illustration. (A parallel splitter has one RJ-11 port on the front and two RJ-11 ports on the back. Do not use a two-line phone splitter, a serial splitter, or a parallel splitter which has two RJ-11 ports on the front and a plug on the back.)

  **Figure 5-15** Example of a parallel splitter

  

- If your computer has two phone ports, set up the printer as follows:

  **Figure 5-16** Back view of the printer

  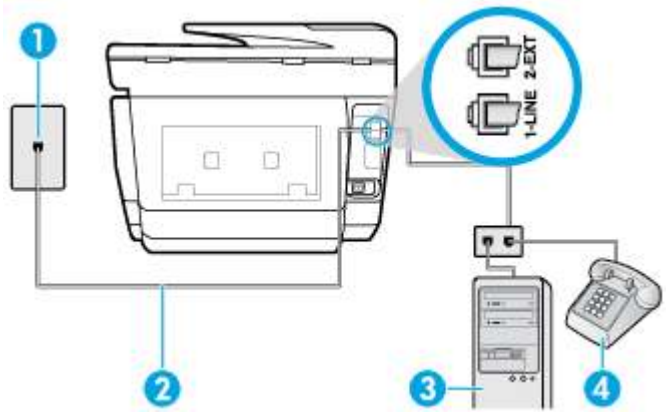
  

| | |
|---|---|
| 1 | Telephone wall jack |
| 2 | Use the phone cord supplied in the box with the printer to connect to the 1-LINE port<br>You might need to connect the supplied phone cord to the adapter provided for your country/region. |
| 3 | Computer with modem |
| 4 | Telephone |

### To set up the printer on the same phone line as a computer with two phone ports

1. Remove the white plug from the port labeled 2-EXT on the back of the printer.
2. Find the phone cord that connects from the back of your computer (your computer dial-up modem) to a telephone wall jack. Disconnect the cord from the telephone wall jack and plug it into the port labeled 2-EXT on the back of the printer.
3. Connect a phone to the "OUT" port on the back of your computer dial-up modem.
4. Use the phone cord supplied in the box with the printer, connect one end to your telephone wall jack, then connect the other end to the port labeled 1-LINE on the back of the printer.

**NOTE:** You might need to connect the supplied phone cord to the adapter provided for your country/region.

If you do not use the supplied cord to connect from the telephone wall jack to the printer, you might not be able to fax successfully. This special phone cord is different from the phone cords you might already have in your home or office.

5. If your modem software is set to receive faxes to your computer automatically, turn off that setting.

**NOTE:** If you do not turn off the automatic fax reception setting in your modem software, the printer cannot receive faxes.

6. Turn off the **Auto Answer** setting.
7. Run a fax test.

You must be available to respond in person to incoming fax calls, or the printer cannot receive faxes.

If you encounter problems setting up the printer with optional equipment, contact your local service provider or vendor for further assistance.

## Serial-type fax setup

For information on setting up the printer for faxing using a serial-type phone system, see the Fax Configuration website for your country/region.

| | |
|---|---|
| Austria | www.hp.com/at/faxconfig |
| Germany | www.hp.com/de/faxconfig |
| Switzerland (French) | www.hp.com/ch/fr/faxconfig |
| Switzerland (German) | www.hp.com/ch/de/faxconfig |
| United Kingdom | www.hp.com/uk/faxconfig |
| Finland | www.hp.fi/faxconfig |
| Denmark | www.hp.dk/faxconfig |
| Sweden | www.hp.se/faxconfig |
| Norway | www.hp.no/faxconfig |
| Netherlands | www.hp.nl/faxconfig |
| Belgium (Dutch) | www.hp.be/nl/faxconfig |
| Belgium (French) | www.hp.be/fr/faxconfig |
| Portugal | www.hp.pt/faxconfig |
| Spain | www.hp.es/faxconfig |
| France | www.hp.com/fr/faxconfig |
| Ireland | www.hp.com/ie/faxconfig |
| Italy | www.hp.com/it/faxconfig |

## Test fax setup

You can test your fax setup to check the status of the printer and to make sure it is set up correctly for faxing. Perform this test after you have completed setting up the printer for faxing. The test does the following:

- Tests the fax hardware
- Verifies the correct type of phone cord is connected to the printer
- Checks that the phone cord is plugged into the correct port

- Checks for a dial tone
- Checks for an active phone line
- Tests the status of your phone line connection

The printer prints a report with the results of the test. If the test fails, review the report for information on how to fix the problem and rerun the test.

**To test fax setup via the printer control panel**

1. Set up the printer for faxing according to your particular home or office setup instructions.
2. Make sure the cartridges are installed, and that full-size paper is loaded in the input tray before starting the test.
3. From the top of the screen, touch or swipe down the tab to open the Dashboard, and then touch  ( **Setup** ).
4. Touch **Fax Setup** .
5. Touch **Tools** , and then touch **Run Fax Test**.

   The printer displays the status of the test on the display and prints a report.
6. Review the report.
   - If the test passes and you are still having problems faxing, check the fax settings listed in the report to verify the settings are correct. A blank or incorrect fax setting can cause problems faxing.
   - If the test fails, review the report for more information on how to fix any problems found.

# 6 Web Services

The printer offers innovative, web-enabled solutions that can help you quickly access the Internet, obtain documents, and print them faster and with less hassle—and all without using a computer.

**NOTE:** To use these web features, the printer must be connected to the Internet (either using an Ethernet cable or wireless connection). You cannot use these web features if the printer is connected using a USB cable.

This section contains the following topics:


- What are Web Services?
- Set up Web Services
- Use Web Services
- Remove Web Services


## What are Web Services?

**HP ePrint**

- **HP ePrint** is a free service from HP that allows you to print to your HP ePrint-enabled printer anytime, from any location. It's as simple as sending an email to the email address assigned to your printer when you enable Web Services on the printer. No special drivers or software are needed. If you can send an email, you can print from anywhere, using **HP ePrint** .

  **NOTE:** You can sign up for an account on HP Connected (might not be available in all countries/regions), and sign in to configure the ePrint settings.

  Once you have signed up for an account on HP Connected (might not be available in all countries/regions), you can sign in to view your **HP ePrint** job status, manage your **HP ePrint** printer queue, control who can use your printer's **HP ePrint** email address to print, and get help for **HP ePrint** .

**Print apps**

- Print apps allow you to easily locate and print preformatted web content, directly from your printer. You can also scan and store your documents digitally on the Web.
- Print apps provide a wide range of content, from store coupons to family activities, news, travel, sports, cooking, photos, and many more. You can even view and print your online images from popular photo sites.
- Certain print apps also allow you to schedule the delivery of app content to your printer.
- Preformatted content designed specifically for your printer means no cut-off text and pictures and no extra pages with only one line of text. On some printers, you can also choose paper and print quality settings on the print preview screen.

## Set up Web Services

Before you set up Web Services, make sure your printer is connected to the Internet using either an Ethernet or wireless connection.

To set up Web Services, use one of the following methods.

**To set up Web Services using the printer control panel**

1. From the top of the screen, touch or swipe down the tab to open the Dashboard, and then touch ( **Setup** ).
2. Touch **Web Services Setup** .
3. Touch **Accept** to accept the Web Services terms of use and enable Web Services.
4. On the screen that appears, touch **OK** to allow the printer to automatically check for product updates.

**NOTE:** If prompted for proxy settings and if your network uses proxy settings, follow the onscreen instructions to set up a proxy server. If you do not have the proxy details, contact your network administrator or the person who set up the network.

5. If the **Printer Update Options** screen is displayed, select one of the options.
6. When the printer is connected to the server, the printer prints an information page. Follow the instructions on the information page to finish the setup.

**To set up Web Services using the embedded web server**

1. Open the EWS. For more information, see Embedded web server.
2. Click the **Web Services** tab.
3. In the **Web Services Settings** section, click **Setup** , click **Continue**, and follow the onscreen instructions to accept the terms of use.
4. If prompted, choose to allow the printer to check for and install printer updates.

**NOTE:** When updates are available, they are automatically downloaded and installed, and then the printer restarts.

**NOTE:** If prompted for proxy settings and if your network uses proxy settings, follow the onscreen instructions to set up a proxy server. If you do not have the proxy details, contact your network administrator or the person who set up the network.

5. When the printer is connected to the server, the printer prints an information page. Follow the instructions on the information page to finish the setup.

**To set up Web Services using the HP printer software (Windows)**

1. Open the HP printer software. For more information, see Open the HP printer software (Windows).
2. Click **Printer Home Page (EWS)** under **Print**.
3. Click the **Web Services** tab.
4. In the **Web Services Settings** section, click **Setup** , click **Continue**, and follow the onscreen instructions to accept the terms of use.
5. If prompted, choose to allow the printer to check for and install printer updates.

**NOTE:** When updates are available, they are automatically downloaded and installed, and then the printer restarts.

**NOTE:** If prompted for proxy settings and if your network uses proxy settings, follow the onscreen instructions to set up a proxy server. If you do not have the details, contact your network administrator or the person who set up the network.

6. When the printer is connected to the server, the printer prints an information page. Follow the instructions on the information page to finish the setup.

# Use Web Services

The following section describes how to use and configure Web Services.

- HP ePrint
- Print apps

## HP ePrint

To use **HP ePrint** , do the following:

- Be sure you have an Internet- and email-capable computer or mobile device.
- Enable Web Services on the printer. For more information, see Set up Web Services.

**TIP:** For more information about managing and configuring **HP ePrint** settings and to learn about the latest features, visit HP Connected (www.hpconnected.com). This site might not be available in all countries/regions.

### To print documents using HP ePrint

1. On your computer or mobile device, open your email application.
2. Create a new email message, and then attach the file that you want to print.
3. Enter the **HP ePrint** email address in the “To” field, and then select the option to send the email message.

**NOTE:** Do not enter any additional email addresses in either the "To" or "Cc" fields. The **HP ePrint** server does not accept print jobs if there are multiple email addresses.

### To find the HP ePrint email address

1. From the printer control panel, touch or swipe down the tab at the top of the screen to open the Dashboard, and then touch ( **HP ePrint** ).
2. Touch **Print Info**. The printer prints an information page that contains the printer code and instructions on how to customize the email address.

### To turn off HP ePrint

1. From the printer control panel, touch or swipe down the tab at the top of the screen to open the Dashboard, touch ( **HP ePrint** ), and then touch (**Web Services Settings**).
2. Touch **HP ePrint** , and then touch **Off** .

**NOTE:** To remove all Web Services, see Remove Web Services.

## Print apps

Print apps allow you to easily locate and print preformatted web content, directly from your printer.

**To use print apps**

1. From the Home screen, touch **Apps** .
2. Touch the print app you want to use.

**NOTE:** For more information about individual print apps, visit HP Connected (www.hpconnected.com). This site might not be available in all countries/regions.

**TIP:** To add, configure, or remove print apps, and set the order in which they appear on your printer control panel, visit HP Connected (www.hpconnected.com). This site might not be available in all countries/regions.

You can also turn off print apps from EWS.

To do so, open EWS (see Open the embedded web server), click the **Web Services** tab and turn off the setting; or click the **Settings** tab, and select the desired option on the **Administrator Settings** page.

# Remove Web Services

Use the following instructions to remove Web Services.

**To remove Web Services using the printer control panel**

1. From the top of the screen, touch or swipe down the tab to open the Dashboard, touch  ( **HP ePrint** ), and then touch  (**Web Services Settings**).
2. Touch **Remove Web Services**.

**To remove Web Services using the embedded web server**

1. Open the EWS. For more information, see Embedded web server.
2. Click the **Web Services** tab, and then click **Remove Web Services** in the **Web Services Settings** section.
3. Click **Remove Web Services**.
4. Click **Yes** to remove Web Services from your printer.

# 7 Work with cartridges

To ensure the best print quality from the printer, you need to perform some simple maintenance procedures.

**TIP:** If you have problems copying documents, see Printing issues.

This section contains the following topics:

- Information on cartridges and the printhead
- Some color ink is used even when printing with black cartridge only
- Check the estimated ink levels
- Replace the cartridges
- Order ink cartridges
- Store printing supplies
- Anonymous usage information storage
- Cartridge warranty information

## Information on cartridges and the printhead

The following tips help maintain HP cartridges and ensure consistent print quality.

- The instructions in this guide are for replacing cartridges, and are not intended for first time installation.
- Keep all cartridges in the original sealed packages until they are needed.
- Be sure to turn off the printer properly. For more information, see Turn the printer off .
- Store cartridges at room temperature (15-35° C or 59-95° F).
- Do not clean the printhead unnecessarily. This wastes ink and shortens the life of the cartridges.
- Handle cartridges carefully. Dropping, jarring, or rough handling during installation can cause temporary printing problems.
- If you are transporting the printer, do the following to prevent ink leaking from the printer or other damage from occurring to the printer:
  - Make sure you turn off the printer by pressing (the Power button). Wait until all sounds of internal motion stop before unplugging the printer.
  - Make sure you leave the cartridges installed.
  - The printer must be transported sitting flat; it should not be placed on its side, back, front, or top.

**CAUTION:** HP recommends that you replace any missing cartridges as soon as possible to avoid print quality issues and possible extra ink usage or damage to the ink system. Never turn off the printer when cartridges are missing.

**NOTE:** This printer is not designed to use continuous ink systems. To resume printing, remove continuous ink system and install original HP (or compatible) cartridges.

**NOTE:** This printer is designed for ink cartridges to be used until they are empty. Refilling cartridges prior to depletion might cause your printer to fail. If this happens, insert a new cartridge (either genuine HP or compatible) to continue printing.

**Related topics**

- Check the estimated ink levels

# Some color ink is used even when printing with black cartridge only

Ink is used in a number of ways throughout the inkjet printing process. In general, ink in a cartridge is used for printing documents, photographs and other such materials. Some ink, however, must be used to maintain the health of the printhead; some ink is residual; and some ink evaporates. For more information on ink usage, visit www.hp.com/go/learnaboutsupplies and click **HP Ink**. (You might need to select your country/region using the **Select Country** button on the page.)

# Check the estimated ink levels

You can check the estimated ink levels from the printer software or from the printer control panel.

**To check the estimated ink levels from the printer control panel**

▲ From the printer control panel, touch or swipe down the tab at the top of the screen to open the Dashboard, and then touch (**Ink**) to check the estimated ink levels.

**NOTE:** Ink level alerts and indicators provide estimates for planning purposes only. When you receive a low-ink alert, consider having a replacement cartridge available to avoid possible printing delays. You do not have to replace the cartridges until prompted to do so.

**NOTE:** If you have installed a refilled or remanufactured cartridge, or a cartridge that has been used in another printer, the ink level indicator might be inaccurate or unavailable.

**NOTE:** Ink from the cartridges is used in the printing process in a number of different ways, including in the initialization process, which prepares the printer and cartridges for printing, and in printhead servicing, which keeps print nozzles clear and ink flowing smoothly. In addition, some residual ink is left in the cartridge after it is used. For more information, see www.hp.com/go/inkusage .

# Replace the cartridges

**NOTE:** For information on recycling used ink supplies, see HP inkjet supplies recycling program.

If you do not already have replacement cartridges for the printer, see Order ink cartridges.

**NOTE:** At this time, some portions of the HP web site are available in English only.

**NOTE:** Not all cartridges are available in all countries/regions.

**CAUTION:** HP recommends that you replace any missing cartridges as soon as possible to avoid print quality issues and possible extra ink usage or damage to the ink system. Never turn off the printer when cartridges are missing.

**To replace the cartridges**

1. Make sure the printer is turned on.

2. Open the cartridge access door.

**NOTE:** Wait until the print carriage stops moving before proceeding.



3. Press the front of the cartridge to release it, and then remove it from the slot.

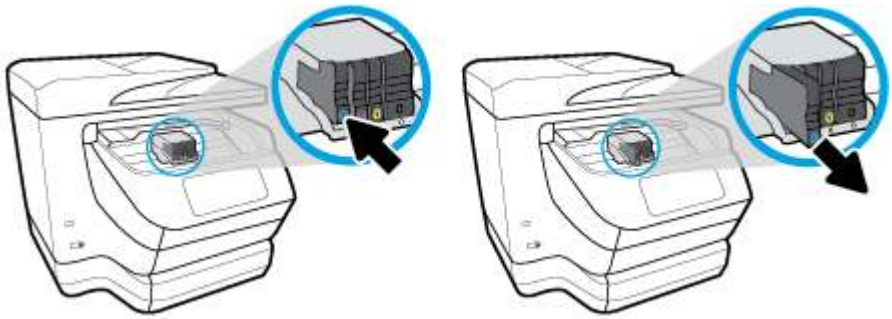

4. Remove the new cartridge from its packaging.
5. Using the color-coded letters for help, slide the cartridge into the empty slot until it is securely installed in the slot.

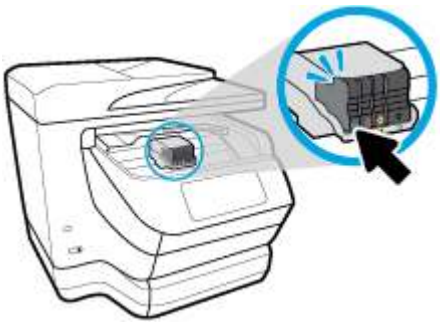

Make sure that the color-coded letter on the cartridge matches that on the slot.



6. Repeat steps 3 through 5 for each cartridge you are replacing.
7. Close the cartridge access door.

# Order ink cartridges

To order ink cartridges, go to www.hp.com . (At this time, some portions of the HP website are available in English only.) Ordering cartridges online is not supported in all countries/regions. However, many countries have information on ordering by telephone, locating a local store and printing a shopping list. In addition, you can visit the www.hp.com/buy/supplies page to obtain information about purchasing HP products in your country.

Use only the replacement cartridges that have the same cartridge number as the ink cartridge you are replacing. You can find the cartridge number in the following places:

- In the embedded web server, by clicking the **Tools** tab, and then, under **Product Information** clicking **Ink Gauge**. For more information, see Embedded web server.
- On the printer status report (see Understand printer reports).
- On the label of the ink cartridge you are replacing.
- On a sticker inside the printer. Open the ink cartridge access door to locate the sticker.

**NOTE:** The **Setup** ink cartridge that comes with the printer is not available for separate purchase.

# Store printing supplies

Cartridges can be left in the printer for extended periods of time. However, to assure optimal cartridge health, be sure to turn off the printer properly when the printer is not in use.

For more information, see Turn the printer off .

# Anonymous usage information storage

The HP cartridges used with this printer contain a memory chip that assists in the operation of the printer. In addition, this memory chip stores a limited set of anonymous information about the usage of the printer, which might include the following: the number of pages printed using the cartridge, the page coverage, frequency of printing, and the printing modes used.

This information helps HP design future printers to meet our customers' printing needs. The data collected from the cartridge memory chip does not contain information that can be used to identify a customer or user of the cartridge or their printer.

HP collects a sampling of the memory chips from cartridges returned to HP's free return and recycling program (HP Planet Partners: www.hp.com/recycle ). The memory chips from this sampling are read and studied in order to improve future HP printers. HP partners who assist in recycling this cartridge might have access to this data, as well.

Any third party possessing the cartridge might have access to the anonymous information on the memory chip. If you prefer to not allow access to this information, you can render the chip inoperable. However, after you render the memory chip inoperable, the cartridge cannot be used in an HP printer.

If you are concerned about providing this anonymous information, you can make this information inaccessible by turning off the memory chip's ability to collect the printer's usage information.

**To disable the usage information function**

1. From the printer control panel, touch or swipe down the tab at the top of the screen to open the Dashboard, and then touch ( **Setup** ).
2. Touch **Preferences** , and then touch **Store Anonymous Usage Information** to turn it off.

**NOTE:** To turn the usage information function on, restore the factory defaults. For more information about how to restore the defaults, see Restore original factory defaults and settings.

**NOTE:** You can continue to use the cartridge in the HP printer if you turn off the memory chip's ability to collect the printer's usage information.

# Cartridge warranty information

The HP cartridge warranty is applicable when the product is used in its designated HP printing device. This warranty does not cover HP ink products that have been refilled, remanufactured, refurbished, misused, or tampered with.

During the warranty period, the product is covered as long as the HP ink is not depleted and the end of warranty date has not been reached. The end of warranty date, in YYYY/MM format, can be found on the product.

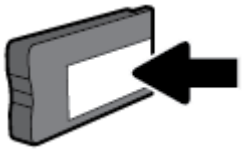

# 8 Network setup

Additional advanced settings are available from the printer's home page (embedded web server or EWS). For more information, see Embedded web server.

This section contains the following topics:

- Set up the printer for wireless communication
- Change network settings
- Use Wi-Fi Direct

## Set up the printer for wireless communication

- Before you begin
- Set up the printer on your wireless network
- Change the connection type
- Test the wireless connection
- Turn on or off the wireless capability of the printer

**NOTE:** If you encounter problems connecting the printer, see Network and connection issues.

**TIP:** For more information about setting up and using the printer wirelessly, visit the HP Wireless Printing Center ( www.hp.com/go/wirelessprinting ).

### Before you begin

Ensure the following:

- The printer is not connected to the network using an Ethernet cable.
- The wireless network is set up and working properly.
- The printer and the computers that use the printer are on the same network (subnet).

While connecting the printer, you might be prompted to enter the wireless network name (SSID) and a wireless password.

- The wireless network name is the name of your wireless network.
- The wireless password prevents other people from connecting to your wireless network without your permission. Depending on the level of security required, your wireless network might use either a WPA passphrase or WEP key.

If you have not changed the network name or the security passkey since setting up your wireless network, you can sometimes find them on the back or side of the wireless router.

If you cannot find the network name or the security password or cannot remember this information, see the documentation provided with your computer or with the wireless router. If you still cannot find this information, contact your network administrator or the person who set up the wireless network.

## Set up the printer on your wireless network

Use the Wireless Setup Wizard from the printer control panel display to set up wireless communication.

**NOTE:** Before you proceed, go through the list at Before you begin.

1. From the printer control panel, touch or swipe down the tab at the top of the screen to open the Dashboard, and then touch (Wireless).
2. Touch ( **Settings** ).
3. Touch **Wireless Settings**.
4. Touch **Wireless Setup Wizard** or **Wi-Fi Protected Setup**.
5. Follow the display instructions to complete the setup.

If you are already using the printer with a different type of connection, such as a USB connection, follow the instructions in Change the connection type to set up the printer on your wireless network.

## Change the connection type

After you have installed the HP printer software and connected the printer to your computer or to a network, you can use the software to change the connection type (for example, from a USB connection to a wireless connection).

**NOTE:** Connecting an Ethernet cable turns off the wireless capability of the printer.

### To change from an Ethernet connection to a wireless connection (Windows)

1. Remove the Ethernet cable from the printer.
2. Run the Wireless Setup Wizard to make the wireless connection. For more information, see Set up the printer on your wireless network.

### To change from a USB connection to a wireless network (Windows)

Before you proceed, go through the list at Before you begin.

1. Open the HP printer software. For more information, see Open the HP printer software (Windows).
2. Click **Tools**.
3. Click **Device Setup & Software**.
4. Select **Convert a USB connected printer to wireless**. Follow the onscreen instructions.

### To change from a USB connection to a wireless network (OS X)

1. Connect the printer to your wireless network.
2. Use 123.hp.com to change the software connection to wireless for this printer.

Learn more about how to change from a USB to wireless connection. Click here to go online for more information. At this time, this website might not be available in all languages.

**To change from a wireless connection to a USB or Ethernet connection (Windows)**

- Connect the USB or Ethernet cable to the printer.

**To change from a wireless connection to a USB or Ethernet connection (OS X)**

Add the printer to the print queue.

1. Open **System Preferences** .
2. Depending on your operating system, click **Printers & Scanners** .
3. Select your printer in the left pane and click - at the bottom of the list. Do the same for the fax entry, if there is one for the current connection.
4. Open HP Utility.

   HP Utility is located in the **HP** folder in the **Applications** folder at the top level of the hard disk.
5. Choose **Devices** > **Setup New Device** and follow the prompts.

## Test the wireless connection

Print the wireless test report for information about the printer wireless connection. The wireless test report provides information about the printer status, hardware (MAC) address, and IP address. If there is a problem with the wireless connection or if a wireless connection attempt failed, the wireless test report also provides diagnostic information. If the printer is connected to a network, the test report displays details about the network settings.

To print the wireless test report

1. From the printer control panel, touch or swipe down the tab at the top of the screen to open the Dashboard, touch (the Wireless button), and then touch ( **Settings** ).
2. Touch **Print Reports**.
3. Touch **Wireless Test Report**.

## Turn on or off the wireless capability of the printer

The blue Wireless light on the printer control panel is lit when the wireless capability of the printer is on.

**NOTE:** Connecting an Ethernet cable to the printer automatically turns off the wireless capability and the Wireless light.

1. From the printer control panel, touch or swipe down the tab at the top of the screen to open the Dashboard, touch (the Wireless button), and then touch ( **Settings** ).
2. Touch **Wireless Settings**.
3. Touch **Wireless** to switch it on or off.

# Change network settings

From the printer control panel, you can set up and manage your printer's wireless connection and perform a variety of network management tasks. This includes viewing and changing network settings, restoring network defaults, and turning the wireless function on or off.

**CAUTION:** Network settings are provided for your convenience. However, unless you are an advanced user, you should not change some of these settings (such as the link speed, IP settings, default gateway, and firewall settings).

### To print network settings

Do one of the following:

- From the printer control panel, touch or swipe down the tab at the top of the screen to open the Dashboard. Touch (Wireless) or (Ethernet) to display the network status screen. Touch **Print Details** to print the network configuration page.
- From the printer control panel, touch or swipe down the tab at the top of the screen to open the Dashboard, touch ( **Setup** ), touch **Reports** , and then touch **Network Configuration Report**.

### To set the link speed

You can change the speed at which data is transmitted over the network. The default is **Automatic**.

1. From the printer control panel, touch or swipe down the tab at the top of the screen to open the Dashboard, touch ( **Setup** ), and then touch **Network Setup**.
2. Touch **Ethernet Settings**.
3. Select **Advanced Settings**.
4. Touch **Link Speed**.
5. Touch the appropriate option that matches your network hardware.

### To change IP settings

The default IP setting for the IP settings is **Automatic**, which sets the IP settings automatically. If you are an advanced user and want to use different settings (such as the IP address, subnet mask, or the default gateway), you can change them manually.

**TIP:** Before setting a manual IP address, it is recommended to first connect the printer to the network using Automatic mode. This allows the router to configure the printer with other needed settings like subnet mask, default gateway and DNS address.

**CAUTION:** Be careful when manually assigning an IP address. If you enter an invalid IP address during the installation, your network components cannot connect with the printer.

1. From the printer control panel, touch or swipe down the tab at the top of the screen to open the Dashboard, touch ( **Setup** ), and then touch **Network Setup**.
2. Touch **Ethernet Settings** or **Wireless Settings**.
3. Touch **Advanced Settings**.
4. Touch **IP Settings**.

   A message appears warning that changing the IP address removes the printer from the network. Touch **OK** to continue.
5. To change the settings manually, touch **Manual (Static)**, and then enter the appropriate information for the following settings:

- **IP Address**
- **Subnet Mask**
- **Default Gateway**
- **DNS Address**

6. Enter your changes, and then touch **Done** .
7. Touch **OK** .

# Use Wi-Fi Direct

With Wi-Fi Direct, you can print wirelessly from a computer, smartphone, tablet, or other wireless-capable device—without connecting to an existing wireless network.

### Guidelines for using Wi-Fi Direct

- Make sure your computer or mobile device has the necessary software.
  - If you are using a computer, make sure you have installed the printer software provided with the printer.

    If you have not installed the HP printer software on the computer, connect to Wi-Fi Direct first and then install the printer software. Select **Wireless** when prompted by the printer software for a connection type.
  - If you are using a mobile device, make sure you have installed a compatible printing app. For more information, visit the HP Mobile Printing website at www.hp.com/go/mobileprinting. If a local version of this website is not available in your country/region or language, you might be directed to the HP Mobile Printing website in another country/region or language.
- Make sure Wi-Fi Direct for your printer is turned on.
- Up to five computers and mobile devices can use the same Wi-Fi Direct connection.
- Wi-Fi Direct can be used while the printer is also connected either to a computer using a USB cable or to a network using a wireless connection.
- Wi-Fi Direct cannot be used to connect a computer, mobile device, or printer to the Internet.

### To turn on Wi-Fi Direct

1. From the printer control panel, touch or swipe down the tab at the top of the screen to open the Dashboard, and then touch  (Wi-Fi Direct).
2. Touch  ( **Settings** ).
3. If the display shows that Wi-Fi Direct is **Off** , touch **Wi-Fi Direct** and then switch it on.

**TIP:** You can also turn on Wi-Fi Direct from the EWS. For more information about using the EWS, see Embedded web server.

### To print from a wireless-capable mobile device that supports Wi-Fi Direct

Make sure you have installed the latest version of HP Print Service Plugin on your mobile device. You can download this plugin from the Google Play application store.

1. Make sure you have turned on Wi-Fi Direct on the printer.
2. Turn on Wi-Fi Direct on your mobile device. For more information, see the documentation provided with the mobile device.
3. From your mobile device, select a document from a print enabled application, and then select the option to print the document.

   The list of available printers appears.
4. From the list of available printers, choose the Wi-Fi Direct name shown such as **DIRECT-**-HP OfficeJet XXXX** (where ** are the unique characters to identify your printer and XXXX is the printer model located on the printer) to connect your mobile device.

   If the mobile device is not automatically connected to the printer, follow the instructions on the printer control panel to connect to the printer. If a PIN code is displayed on the printer control panel, enter the PIN code on your mobile device.

   When the mobile device is successfully connected to the printer, the printer starts printing.

### To print from a wireless-capable mobile device that does not support Wi-Fi Direct

Make sure you have installed a compatible printing app on your mobile device. For more information, visit the HP Mobile Printing website at www.hp.com/go/mobileprinting. If a local version of this website is not available in your country/region or language, you might be directed to the HP Mobile Printing website in another country/region or language.

1. Make sure you have turned on Wi-Fi Direct on the printer.
2. Turn on the Wi-Fi connection on your mobile device. For more information, see the documentation provided with the mobile device.

   **NOTE:** If your mobile device does not support Wi-Fi, you are not able to use Wi-Fi Direct.
3. From the mobile device, connect to a new network. Use the process you normally use to connect to a new wireless network or hotspot. Choose the Wi-Fi Direct name from the list of wireless networks shown such as **DIRECT-**-HP OfficeJet XXXX** (where ** are the unique characters to identify your printer and XXXX is the printer model located on the printer).

   Enter the Wi-Fi Direct password when prompted.
4. Print your document.

### To print from a wireless-capable computer (Windows)

1. Make sure you have turned on Wi-Fi Direct on the printer.
2. Turn on the computer's Wi-Fi connection. For more information, see the documentation provided with the computer.

   **NOTE:** If your computer does not support Wi-Fi, you are not able to use Wi-Fi Direct.
3. From the computer, connect to a new network. Use the process you normally use to connect to a new wireless network or hotspot. Choose the Wi-Fi Direct name from the list of wireless networks shown

such as **DIRECT-**-HP OfficeJet XXXX** (where ** are the unique characters to identify your printer and XXXX is the printer model located on the printer).

Enter the Wi-Fi Direct password when prompted.

4. Proceed to step 5 if the printer has been installed and connected to the computer over a wireless network. If the printer has been installed and connected to your computer with a USB cable, follow the steps below to install the printer software using the Wi-Fi Direct connection.

   a. Open the HP printer software. For more information, see Open the HP printer software (Windows).

   b. Click **Tools**.

   c. Click **Device Setup & Software**, and then select **Connect a new printer**.

   **NOTE:** If you have previously installed the printer over USB and want to convert to Wi-Fi Direct, do not select the **Convert a USB connected printer to wireless** option.

   d. When the **Connection Options** software screen appears, select **Wireless**.

   e. Select your HP printer from the detected printer list.

   f. Follow the onscreen instructions.

5. Print your document.

**To print from a wireless-capable computer (OS X)**

1. Make sure you have turned on Wi-Fi Direct on the printer.
2. Turn on Wi-Fi on the computer.

   For more information, see the documentation provided by Apple.

3. Click the Wi-Fi icon and choose the Wi-Fi Direct name, such as **DIRECT-**-HP OfficeJet XXXX** (where ** are the unique characters to identify your printer and XXXX is the printer model located on the printer).

   If Wi-Fi Direct is turned on with security, enter the password when prompted.

4. Add the printer.

   a. Open **System Preferences** .

   b. Click **Printers & Scanners** .

   c. Click + below the list of printers at the left.

   d. Select the printer from the list of detected printers (the word “Bonjour” is listed the right column beside the printer name), and click **Add**.

Click here for online troubleshooting for Wi-Fi Direct, or for more help with setting up Wi-Fi Direct. At this time, this website might not be available in all languages.

# 9 Printer management tools

This section contains the following topics:

- Toolbox (Windows)
- HP Utility (OS X)
- Embedded web server
- HP Web Jetadmin software

## Toolbox (Windows)

The Toolbox provides maintenance information about the printer.

**NOTE:** The Toolbox can be installed from the HP Software CD if the computer meets the system requirements. System requirements can be found in the Readme file, which is available on the HP printer software CD provided with your printer.

**To open the Toolbox**

1. Open the HP printer software. For more information, see Open the HP printer software (Windows).
2. Click **Print, Scan & Fax** .
3. Click **Maintain Your Printer**.

## HP Utility (OS X)

HP Utility contains tools to configure print settings, calibrate the printer, order supplies online, and find website support information.

**NOTE:** The features available in HP Utility vary depending on the selected printer.

Ink level warnings and indicators provide estimates for planning purposes only. When you receive a low-ink warning message, consider having a replacement cartridge available to avoid possible printing delays. You do not need to replace cartridges until the print quality becomes unacceptable.

Double-click HP Utility in the **HP** folder in the **Applications** folder.

## Embedded web server

When the printer is connected to a network, you can use the printer's embedded web server (EWS) to view status information, change settings, and manage it from your computer.

**NOTE:** To view or change some settings, you might need a password.

**NOTE:** You can open and use the embedded web server without being connected to the Internet. However, some features are not available.

- About cookies
- Open the embedded web server

- Embedded web server cannot be opened
- Restrict Color

## About cookies

The embedded Web server (EWS) places very small text files (cookies) on your hard drive when you are browsing. These files let the EWS recognize your computer the next time you visit. For example, if you have configured the EWS language, a cookie helps remember which language you have selected so that the next time you access the EWS, the pages are displayed in that language. Some cookies (such as the cookie that stores customer-specific preferences) are stored on the computer until you clear them manually.

You can configure your browser to accept all cookies, or you can configure it to alert you every time a cookie is offered, which allows you to decide which cookies to accept or refuse. You can also use your browser to remove unwanted cookies.

Depending on your printer, if you disable cookies, you also disable one or more of the following features:

- Using some setup wizards
- Remembering the EWS browser language setting
- Personalizing the EWS Home page

For information about how to change your privacy and cookie settings and how to view or delete cookies, see the documentation available with your Web browser.

## Open the embedded web server

You can access the embedded web server through either a network or Wi-Fi Direct.

### To open the embedded web server through a network

1. Find out the IP address or hostname of the printer by touching  (Wireless) or  (Ethernet) or by printing a network configuration page.

   **NOTE:** The printer must be on a network and must have an IP address.

2. In a supported web browser on your computer, type the IP address or hostname assigned to the printer.

   For example, if the IP address is 123.123.123.123, type the following address into the web browser: `http://123.123.123.123`.

### To open the embedded web server through Wi-Fi Direct

1. From the printer control panel, touch or swipe down the tab at the top of the screen to open the Dashboard, and then touch  (Wi-Fi Direct).

2. Touch  ( **Settings** ).

3. If the display shows that Wi-Fi Direct is **Off** , touch **Wi-Fi Direct** and then switch it on.

4. From your wireless computer, turn wireless on, search for and connect to the Wi-Fi Direct name, for example: **DIRECT-**-HP OfficeJet XXXX** (where ** are the unique characters to identify your printer and XXXX is the printer model located on the printer).

   Enter the Wi-Fi Direct password when prompted.

5. In a supported web browser on your computer, type the following address: `http://192.168.223.1`.

## Embedded web server cannot be opened

### Check your network setup

- Make sure you are not using a phone cord or a crossover cable to connect the printer to the network.
- Make sure the network cable is securely connected to the printer.
- Make sure the network hub, switch, or router is turned on and working correctly.

### Check the computer

- Make sure the computer that you are using is connected to the same network as the printer.

### Check your web browser

- Make sure the web browser meets the minimum system requirements. For more information, see system requirements in the printer's Readme file found on the HP printer software CD.
- If your web browser uses any proxy settings to connect to the Internet, try turning off these settings. For more information, see the documentation available with your web browser.
- Make sure JavaScript and cookies are enabled in your web browser. For more information, see the documentation available with your web browser.

### Check the printer IP address

- Make sure the printer IP address is correct.

  To find out the printer IP address, from the printer control panel, touch or swipe down the tab at the top of the screen to open the Dashboard, touch (Wireless) or (Ethernet).

  To obtain the printer IP address by printing a network configuration page, from the printer control panel, touch or swipe down the tab at the top of the screen to open the Dashboard, touch ( **Setup** ), touch **Reports** , and then touch **Network Configuration Report**.

- Make sure the printer IP address is valid. The printer IP address should have the similar format as the router IP address. For example, the router IP address might be 192.168.0.1 or 10.0.0.1 and the printer IP address is 192.168.0.5 or 10.0.0.5.

  If the printer IP address is similar to 169.254.XXX.XXX or 0.0.0.0, it is not connected to the network.

**TIP:** If you are using a computer running Windows, you can visit the HP online support website at www.support.hp.com . This website provides information and utilities that can help you correct many common printer problems.

## Restrict Color

Use this feature to manage the use of color printing supplies within your organization. You can specify that all color print jobs are printed in color, all color print jobs are printed in their grayscale equivalent, or color printing is restricted based on the user's permission level.

**To configure the feature in EWS**

1. Open the EWS. For more information, see Open the embedded web server.
2. Click the **Settings** tab, click **Copy/Print Settings**, and then click **Restrict Color**.
3. Select the desired options, and then click **Apply**.

# HP Web Jetadmin software

HP Web Jetadmin is an award-winning, industry-leading tool for efficiently managing a wide variety of networked HP devices, including printers, multifunction products, and digital senders. This single solution allows you to remotely install, monitor, maintain, troubleshoot, and secure your printing and imaging environment — ultimately increasing business productivity by helping you save time, control costs, and protect your investment.

HP Web Jetadmin updates are periodically made available to provide support for specific product features. Visit www.hp.com/go/webjetadmin to learn more about updates, release notes, or support documents.

# 10 Solve a problem

The information in this section suggests solutions to common problems. If your printer is not operating correctly and these suggestions did not solve your problem, try using one of the support services listed in HP support to obtain assistance.

This section contains the following topics:


- Jams and paper-feed issues
- Printing issues
- Copy issues
- Scan issues
- Fax issues
- Network and connection issues
- Printer hardware issues
- Get help from the printer control panel
- Understand printer reports
- Solve problems using Web Services
- Maintain the printer
- Restore original factory defaults and settings
- HP support


## Jams and paper-feed issues

What do you want to do?

### Clear a paper jam

| | |
|---|---|
| Solve paper jam issues. | Use an HP online troubleshooting wizard<br><br>Instructions for clearing the jam in the printer or in the document feeder and resolving issues with paper or the paper feed. |

**NOTE:** The HP online troubleshooting wizards may not be available in all languages.

#### Read general instructions in the Help for clearing paper jams

Paper jams can occur in several locations inside the printer.

**CAUTION:** To prevent possible damage to the printhead, clear paper jams as soon as possible.

### To clear a paper jam from Tray 1

1. Pull Tray 1 out of the printer completely.

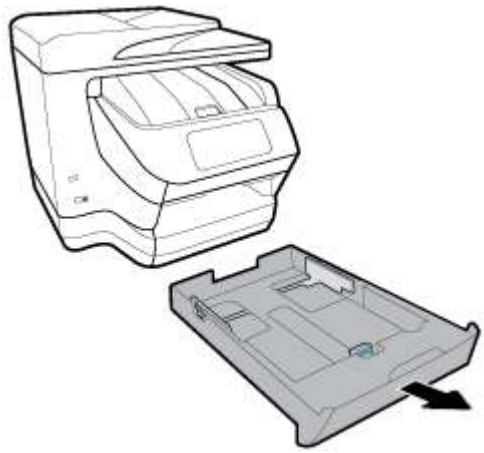

2. Check the gap in the printer where the input tray was. Reach into the gap and remove the jammed paper.

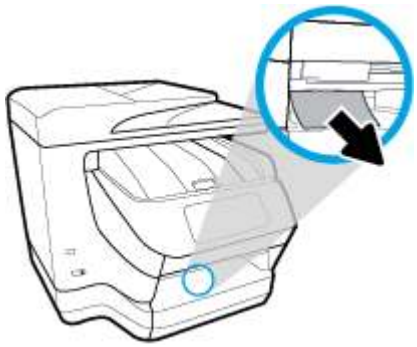

3. Insert Tray 1 back into the printer.

### To clear a paper jam from Tray 2

▲ Pull Tray 2 out of the printer completely, and then remove any jammed paper if possible. If the jam cannot be cleared in this way, do the following:

   **a.** Lift the printer off Tray 2.

   **b.** Remove any jammed paper from the bottom of the printer or from the input tray.

   **c.** Reposition the printer on the top of the input tray.

### To clear a paper jam from the front of the printer

1. Slide up to open the cartridge access door.



2. If the print carriage is not obstructed, move the print carriage to the far right of the printer and remove the jammed paper.

   If need, move the carriage to the far left of the printer, and remove any jammed or torn pieces of paper.

3. Slide down to close the cartridge access door.



**To clear a paper jam from the output area**

1. Slide up to open the cartridge access door.



2. Open the inside cover by lifting and moving it towards you.



3. Remove any jammed paper or scraps of paper.
4. Lower and press down the inside cover to close it. There is a soft click to indicate that it is secure.

5. Slide down to close the cartridge access door.



6. Remove Tray 1 by pulling it out from the printer.
7. Open the duplex door (above where the tray was), by holding the center and pulling it towards you.



8. Open the inner door by pressing down in the middle area.



9. Remove any jammed paper.
10. Lift up and close the inner door.



11. Lift, push back, and close the duplex door.

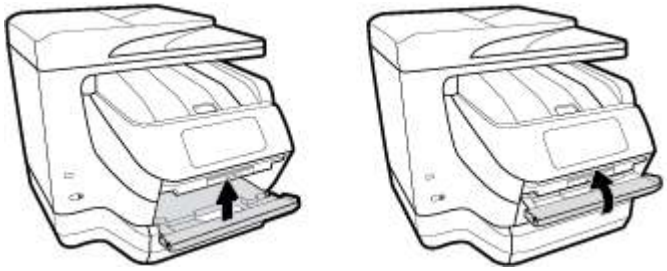

12. Insert the input tray.

**To clear a paper jam from the duplex area**

1. Remove Tray 1 by pulling it out from the printer.
2. Open the duplex door (above where the tray was), by holding the center and pulling it towards you.



3. Remove any jammed paper.
4. Lift, push back, and close the duplex door.

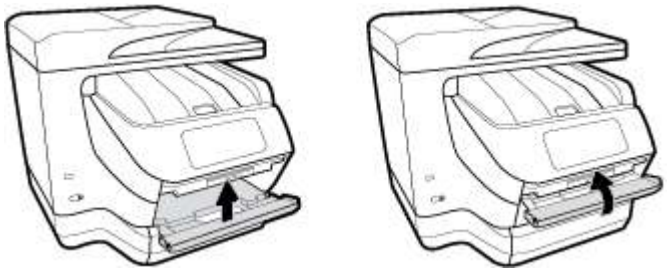

5. Insert the input tray.

**To clear a paper jam from the rear of the printer**

1. Turn to the rear of the printer.
2. Press the two tabs on the rear access door and open the door.

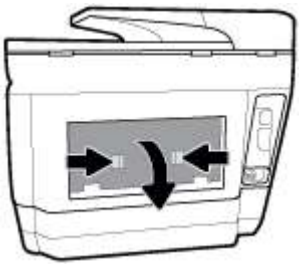

3. Remove any jammed paper.
4. Press the two buttons on the paper path cover, and pull the cover out of the printer completely.

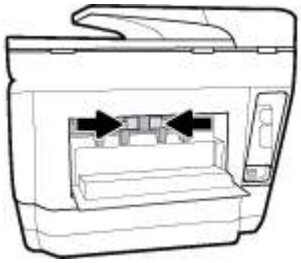

5. Remove any jammed paper.
6. Insert the paper path cover back into the printer.

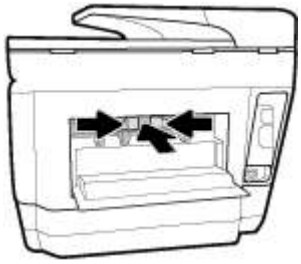

7. Close the rear access door.



**To clear a paper jam from the document feeder**

1. Lift the cover of the document feeder.



2. Pull any jammed paper out of the rollers.



3. Close the cover of the document feeder until it snaps into space.
4. Lift up the document feeder tray.
5. Remove any jammed paper under the tray.



6. Put down the document feeder tray.

## Clear a print carriage jam

| | |
|---|---|
| Resolve a print carriage jam. | Use an HP online troubleshooting wizard<br>If something is blocking the print carriage or it does not move easily, get step-by-step instructions. |

**NOTE:** The HP online troubleshooting wizards may not be available in all languages.

### Read general instructions in the Help for clearing a print carriage jams

Remove any objects, such as paper, that are blocking the print carriage.

**NOTE:** Do not use any tools or other devices to remove jammed paper. Always use caution when removing jammed paper from inside the printer.

## Learn how to avoid paper jams

To help avoid paper jams, follow these guidelines.

- Remove printed papers from the output tray frequently.
- Make sure that you are printing with paper that is not wrinkled, folded, or damaged.
- Prevent curled or wrinkled paper by storing all unused paper flat in a resealable bag.
- Do not use paper that is too thick or too thin for the printer.

- Make sure that the trays are loaded correctly and are not too full. For more information, see Load paper.
- Ensure that paper loaded in the input tray lays flat and the edges are not bent or torn.
- Do not place too much paper in the document feeder tray. For information on the maximum number of sheets allowed in the document feeder, see Specifications.
- Do not mix different paper types and paper sizes in the input tray; the entire stack of paper in the input tray must be the same size and type.
- Adjust the paper-width guides in the input tray to fit snugly against all paper. Make sure the paper-width guides do not bend the paper in the input tray.
- Adjust the paper-length guide in the input tray to fit snugly against all paper. Make sure the paper-length guide does not bend the paper in the input tray.
- Do not force paper too far inside the input tray.
- If you are printing on both sides of a page, do not print highly saturated images on light weight paper.
- Use paper types that are recommended for the printer.
- If the printer is about to run out of paper, allow the printer to run out of paper first, and then add paper. Do not load paper when the printer is printing.
- When removing the input tray, it is recommended to remove the tray completely from the printer to make sure no paper is stuck at the rear of the tray. You might need to check the opening in the printer where the tray was, and reach into the gap to remove any paper.

## Solve paper-feed problems

What kind of problem are you having?

- **Paper is not picked up from a tray**
  - Make sure paper is loaded in the tray. For more information, see Load paper. Fan the paper before loading.
  - Make sure the paper-width guides are set to the correct markings in the tray for the paper size you are loading. Also make sure the paper guides are snug, but not tight, against the stack.
  - Ensure that the stack of paper is aligned with the appropriate paper size lines on the bottom of the input tray, and does not exceed the stack height indicated by one or more label on the side or paper-width guide of the input tray.
  - Make sure paper in the tray is not curled. Uncurl paper by bending it in the opposite direction of the curl.
- **Pages are skewing**
  - Make sure the paper loaded in the input tray is aligned to the paper-width guides. If needed, pull out the input tray from the printer and reload the paper correctly, making sure that the paper guides are aligned correctly.
  - Load paper into the printer only when it is not printing.
- **Multiple pages are being picked up**

- Make sure the paper-width guides are set to the correct markings in the tray for the paper size you are loading. Also make sure the paper-width guides are snug, but not tight, against the stack.
- Ensure that the stack of paper is aligned with the appropriate paper size lines on the bottom of the input tray, and does not exceed the stack height indicated by one or more label on the side or paper-width guide of the input tray.
- Make sure the tray is not overloaded with paper.
- Use HP paper for optimum performance and efficiency.

# Printing issues

What do you want to do?

## Fix problems with page not printing (unable to print)

| | |
|---|---|
| HP Print and Scan Doctor | The HP Print and Scan Doctor is a utility that will try to diagnose and fix the issue automatically.<br>**NOTE:** This utility is only available for Windows operating system. |
| Troubleshoot problems with print jobs not printing. | Use an HP online troubleshooting wizard<br>Get step-by-step instructions if the printer is not responding or printing. |

**NOTE:** The HP Print and Scan Doctor and the HP online troubleshooting wizards may not be available in all languages.

### Read general instructions in the Help for unable to print issues

#### To resolve print issues (Windows)

Make sure that the printer is turned on and that there is paper in the tray. If you are still unable to print, try the following in order:

1. Check for error messages from the printer display and resolve them by following the onscreen instructions.
2. If your computer is connected to the printer with a USB cable, disconnect and reconnect the USB cable. If your computer is connected to the printer with a wireless connection, confirm that the connection is working.
3. Verify that the printer is not paused or offline.

   **To verify that the printer is not paused or offline**

   a. Depending on your operating system, do one of the following:

   - **Windows 10**: From the Windows **Start** menu, click **All apps**, click **Windows System**, click **Control Panel**, and then click **View devices and printers** under **Hardware and Sound** menu.
   - **Windows 8.1** and **Windows 8**: Point to or tap the upper-right corner of the screen to open the Charms bar, click the **Settings** icon, click or tap **Control Panel**, and then click or tap **View devices and printers**.
   - **Windows 7**: From the Windows **Start** menu, click **Devices and Printers**.

- **Windows Vista**: From the Windows **Start** menu, click **Control Panel**, and then click **Printers**.
- **Windows XP**: From the Windows **Start** menu, click **Control Panel**, and then click **Printers and Faxes**.

**b.** Either double-click the icon for your printer or right-click the icon for your printer and select **See what's printing** to open the print queue.

**c.** On the **Printer** menu, make sure there are no check marks next to **Pause Printing** or **Use Printer Offline**.

**d.** If you made any changes, try to print again.

**4.** Verify that the printer is set as the default printer.

**To verify that the printer is set as the default printer**

**a.** Depending on your operating system, do one of the following:

- **Windows 10**: From the Windows **Start** menu, click **All apps**, click **Windows System**, click **Control Panel**, and then click **View devices and printers** under **Hardware and Sound** menu.
- **Windows 8.1** and **Windows 8**: Point to or tap the upper-right corner of the screen to open the Charms bar, click the **Settings** icon, click or tap **Control Panel**, and then click or tap **View devices and printers**.
- **Windows 7**: From the Windows **Start** menu, click **Devices and Printers**.
- **Windows Vista**: From the Windows **Start** menu, click **Control Panel**, and then click **Printers**.
- **Windows XP**: From the Windows **Start** menu, click **Control Panel**, and then click **Printers and Faxes**.

**b.** Make sure the correct printer is set as the default printer.

The default printer has a check mark in a black or green circle next to it.

**c.** If the wrong printer is set as the default printer, right-click the correct printer and select **Set as Default Printer**.

**d.** Try using your printer again.

**5.** Restart the print spooler.

**To restart the print spooler**

**a.** Depending on your operating system, do one of the following:

**Windows 10**

**i.** From the Windows **Start** menu, click **All apps**, and then click **Windows System**.

**ii.** Click **Control Panel**, click **System and Security**, and then click **Administrative Tools**.

**iii.** Double-click **Services**.

**iv.** Right-click the **Print Spooler**, and then click **Properties**.

**v.** On the **General** tab, next to **Startup type**, make sure that **Automatic** is selected.

**vi.** If the service is not already running, under **Service status**, click **Start**, and then click **OK**.

**Windows 8.1 and Windows 8**

i. Point to or tap the upper-right corner of the screen to open the Charms bar, and then click the **Settings** icon.

ii. Click or tap **Control Panel**, and then click or tap **System and Security**.

iii. Click or tap **Administrative Tools**, and then double-click or double-tap **Services**.

iv. Right-click or touch and hold **Print Spooler**, and then click **Properties**.

v. On the **General** tab, next to **Startup type**, make sure that **Automatic** is selected.

vi. If the service is not already running, under **Service status**, click or tap **Start**, and then click or tap **OK**.

**Windows 7**

i. From the Windows **Start** menu, click **Control Panel**, **System and Security**, and then **Administrative Tools**.

ii. Double-click **Services**.

iii. Right-click the **Print Spooler**, and then click **Properties**.

iv. On the **General** tab, next to **Startup type**, make sure that **Automatic** is selected.

v. If the service is not already running, under **Service status**, click **Start**, and then click **OK**.

**Windows Vista**

i. From the Windows **Start** menu, click **Control Panel**, **System and Maintenance**, **Administrative Tools**.

ii. Double-click **Services**.

iii. Right-click the **Print Spooler service**, and then click **Properties**.

iv. On the **General** tab, next to **Startup type**, make sure that **Automatic** is selected.

v. If the service is not already running, under **Service status**, click **Start**, and then click **OK**.

**Windows XP**

i. From the Windows **Start** menu, right click **My Computer**.

ii. Click **Manage**, and then click **Services and Applications**.

iii. Double-click **Services**, and then select **Print Spooler**.

iv. Right-click **Print Spooler**, and click **Restart** to restart the service.

**b.** Make sure the correct printer is set as the default printer.

The default printer has a check mark in a black or green circle next to it.

**c.** If the wrong printer is set as the default printer, right-click the correct printer and select **Set as Default Printer**.

**d.** Try using your printer again.

6. Restart the computer.
7. Clear the print queue.

**To clear the print queue**

**a.** Depending on your operating system, do one of the following:

- **Windows 10**: From the Windows **Start** menu, click **All apps**, click **Windows System**, click **Control Panel**, and then click **View devices and printers** under **Hardware and Sound** menu.
- **Windows 8.1** and **Windows 8**: Point to or tap the upper-right corner of the screen to open the Charms bar, click the **Settings** icon, click or tap **Control Panel**, and then click or tap **View devices and printers**.
- **Windows 7**: From the Windows **Start** menu, click **Devices and Printers**.
- **Windows Vista**: From the Windows **Start** menu, click **Control Panel**, and then click **Printers**.
- **Windows XP**: From the Windows **Start** menu, click **Control Panel**, and then click **Printers and Faxes**.

**b.** Double-click the icon for your printer to open the print queue.

**c.** On the **Printer** menu, click **Cancel all documents** or **Purge Print Document**, and then click **Yes** to confirm.

**d.** If there are still documents in the queue, restart the computer and try printing again after the computer has restarted.

**e.** Check the print queue again to make sure it is clear, and then try to print again.

**To check the power connection and reset the printer**

**1.** Make sure the power cord is firmly connected to the printer.

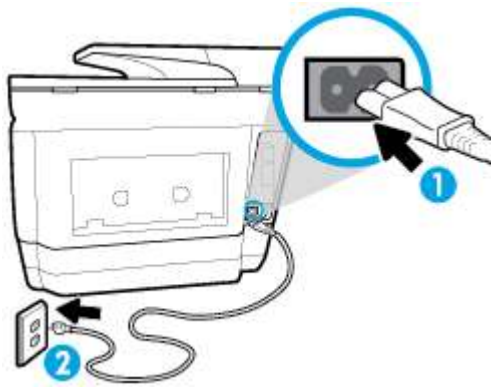


| | |
|---|---|
| 1 | Power connection to the printer |
| 2 | Connection to a power outlet |

**2.** Look at the Power button located on the printer. If it is not lit, the printer is turned off. Press the Power button to turn on the printer.

**NOTE:** If the printer is not receiving electrical power, connect it to another power outlet.

**3.** With the printer turned on, disconnect the power cord from the side of the printer.

**4.** Unplug the power cord from the wall outlet.

**5.** Wait at least 15 seconds.

**6.** Plug the power cord back into the wall outlet.

7. Reconnect the power cord to the side of the printer.
8. If the printer does not turn on by itself, press the Power button to turn on the printer.
9. Try using the printer again.

**To resolve print issues (OS X)**

1. Check for error messages and resolve.
2. Disconnect and reconnect the USB cable.
3. Verify that the product is not paused or offline.

   **To verify that the product is not paused or offline**

   a. In **System Preferences**, click **Print & Fax**.

   b. Click the **Open Print Queue** button.

   c. Click a print job to select it.

      Use the following buttons to manage the print job:

      - **Delete**: Cancel the selected print job.
      - **Hold**: Pause the selected print job.
      - **Resume**: Continue a paused print job.
      - **Pause Printer**: Pause all print jobs in the print queue.

   d. If you made any changes, try to print again.
4. Restart the computer.

## Fix print quality issues

| | |
|---|---|
| Step-by-step instructions for resolving most print quality issues. | Troubleshoot print quality issues online |

### Read general instructions in the Help for resolving print quality issues

**NOTE:** To avoid print quality problems, always turn the printer off using the Power button, and wait until the Power button light goes out before you pull the plug or turn off a power strip. This allows the printer to move the cartridges to a capped position, where they are protected from drying out.

**To improve print quality (Windows)**

1. Make sure you are using original HP cartridges.
2. Check the printer software to make sure you have selected the appropriate paper type from the **Media** drop-down list and print quality from the **Quality Settings** drop-down list.
   - In the printer software, click **Print, Scan, & Fax** and then click **Set Preferences** to access the print properties.
3. Check the estimated ink levels to determine if the cartridges are low on ink. For more information, see Check the estimated ink levels. If the cartridges are low on ink, consider replacing them.
4. Align the printhead.

**To align the printhead from the printer software**

**NOTE:** Aligning the printhead ensures the high-quality output. The printhead does not have to be realigned when cartridges are replaced.

a. Load letter or A4 unused plain white paper into the input tray.

b. Open the HP printer software. For more information, see Open the HP printer software (Windows).

c. In the printer software, click **Print, Scan, & Fax** , and then click **Maintain Your Printer** to access the **Printer Toolbox**.

d. In **Printer Toolbox**, click **Align Printheads** on the **Device Services** tab. The printer prints an alignment sheet.

**To align the printhead from the printer display**

a. Load Letter, A4, or legal unused plain white paper into the input tray.

b. From the printer control panel, touch or swipe down the tab at the top of the screen to open the Dashboard, and then touch ( **Setup** ).

c. Touch **Printer Maintenance** , touch **Align Printhead**, and then follow the onscreen instructions.

5. Print a diagnostics page if the cartridges are not low on ink.

**To print a diagnostics page from the printer software**

a. Load letter, A4, or legal unused plain white paper into the input tray.

b. Open the HP printer software. For more information, see Open the HP printer software (Windows).

c. In the printer software, click **Print, Scan, & Fax** , and then click **Maintain Your Printer** to access the printer toolbox.

d. Click **Print Diagnostic Information** on the **Device Reports** tab to print a diagnostics page.

**To print a diagnostics page from the printer display**

a. Load letter, A4, or legal unused plain white paper into the input tray.

b. From the printer control panel, touch or swipe down the tab at the top of the screen to open the Dashboard, and then touch ( **Setup** ).

c. Touch **Reports** .

d. Touch **Print Quality Report**.

6. Review the blue, magenta, yellow, and black boxes on the diagnostics page. If you are seeing streaks in the color and black boxes, or no ink in portions of the boxes, then automatically clean the printhead.

**To clean the printhead from the printer software**

a. Load letter, A4, or legal unused plain white paper into the input tray.

b. Open the HP printer software. For more information, see Open the HP printer software (Windows).

c. In the printer software, click **Print, Scan, & Fax** , and then click **Maintain Your Printer** to access the **Printer Toolbox**.

d. Click **Clean Printheads** on the **Device Services** tab. Follow the onscreen instructions.

**To clean the printhead from the printer display**

a. Load Letter, A4, or legal unused plain white paper into the input tray.

b. From the printer control panel, touch or swipe down the tab at the top of the screen to open the Dashboard, and then touch ( **Setup** ).

c. Touch **Printer Maintenance** , select **Clean Printhead**, and then follow the onscreen instructions.

7. If cleaning the printhead does not solve the problem, contact HP support. Go to www.support.hp.com . This website provides information and utilities that can help you correct many common printer problems. If prompted, select your country/region, and then click **All HP Contacts** for information on calling for technical support.

**To improve print quality (OS X)**

1. Make sure you are using original HP cartridges.
2. Make sure you have selected the appropriate paper type and print quality in the **Print** dialog.
3. Check the estimated ink levels to determine if the cartridges are low on ink.

   Consider replacing the print cartridges if they are low on ink.
4. Check the paper type.

   For best print quality, use high quality HP paper, or papers that adhere to the ColorLok® standard. For more information, see Paper basics.

   Always make sure the paper you are printing on is flat. For best results when printing images, use HP Advanced Photo Paper.

   Store specialty paper in its original packaging inside a resealable plastic bag on a flat surface in a cool, dry place. When you are ready to print, remove only the paper you plan to use immediately. When you have finished printing, return any unused photo paper to the plastic bag. This prevents the photo paper from curling.
5. Align the printhead.

   **To align the printhead from the software**

   a. Load Letter or A4 plain, white paper in the input tray.

   b. Open HP Utility.

   **NOTE:** HP Utility is located in the **HP** folder in the **Applications** folder at the top level of the hard disk.

   c. Select your printer from the list of devices at the left of the window.

   d. Click **Align**.

   e. Click **Align** and follow the onscreen instructions.

   f. Click **All Settings** to return to the **Information and Support** pane.
6. Print a test page.

**To print a test page**

a. Load Letter or A4 plain, white paper in the input tray.

b. Open HP Utility.

**NOTE:** HP Utility is located in the **HP** folder in the **Applications** folder at the top level of the hard disk.

c. Select your printer from the list of devices at the left of the window.

d. Click **Test Page**.

e. Click the **Print Test Page** button, and follow the onscreen instructions.

7. If the diagnostic page shows steaks or missing portions of the text or colored boxes, clean the printhead automatically.

**To automatically clean the printhead**

a. Load Letter or A4 plain, white paper in the paper tray.

b. Open HP Utility.

**NOTE:** HP Utility is located in the **HP** folder in the **Applications** folder at the top level of the hard disk.

c. Select your printer from the list of devices at the left of the window.

d. Click **Clean Printheads**.

e. Click **Clean**, and follow the onscreen instructions.

**CAUTION:** Clean the printhead only when necessary. Unnecessary cleaning wastes ink and shortens the life of the print head.

**NOTE:** If print quality still seems poor after you complete cleaning, try aligning the printhead. If print quality problems persist after cleaning and aligning, contact HP support.

f. Click **All Settings** to return to the **Information and Support** pane.

# Copy issues

| | |
|---|---|
| Troubleshoot copy problems. | Use an HP online troubleshooting wizard<br>Get step-by-step instructions if the printer does not create a copy, or if your printouts are low quality. |

**NOTE:** The HP online troubleshooting wizards may not be available in all languages.

Tips for copy and scan success

# Scan issues

| | |
|---|---|
| HP Print and Scan Doctor | The HP Print and Scan Doctor is a utility that will try to diagnose and fix the issue automatically.<br>**NOTE:** This utility is only available for Windows operating system. |
| Solve scan problems | Use an HP online troubleshooting wizard |

| | |
|---|---|
| | Get step-by-step instructions if you cannot create a scan or if your scans are low quality. |

**NOTE:** The HP Print and Scan Doctor and the HP online troubleshooting wizards may not be available in all languages.

Tips for copy and scan success

# Fax issues

Run the fax test report first to see if there is a problem with your fax setup. If the test passes and you are still having problems faxing, check the fax settings listed in the report to verify that the settings are correct.

## Run the fax test

You can test your fax setup to check the status of the printer and to make sure it is set up correctly for faxing. Perform this test only after you have completed fax setup on the printer. The test does the following:

- Tests the fax hardware
- Verifies that the correct type of phone cord is connected to the printer
- Checks that the phone cord is plugged into the correct port
- Checks for a dial tone
- Tests the status of your phone line connection
- Checks for an active phone line

### To test fax setup via the printer control panel

1. Set up the printer for faxing according to your particular home or office setup instructions.
2. Make sure the cartridges are installed and that full-size paper is loaded in the input tray before starting the test.
3. On the **Fax** screen, flick to the right and touch **Setup** , touch **Setup Wizard**, and then follow the onscreen instructions.

   The printer displays the status of the test on the display and prints a report.
4. Review the report.
   - If the fax test failed, review the solutions below.
   - If the fax test passed and you are still having problems faxing, verify that the fax settings listed in the report are correct. You can also use HP's online troubleshooting wizard.

## What to do if the fax test failed

If you ran a fax test and the test failed, review the report for basic information about the error. For more detailed information, check the report to see which part of the test failed, and then review the appropriate topic in this section for solutions to try.

### The "Fax Hardware Test" failed

- Turn the printer off by pressing  (the Power button) located on the front left side of the printer and then unplug the power cord from the back of the printer. After a few seconds, plug the power cord in again, and then turn the power on. Run the test again. If the test fails again, continue reviewing the troubleshooting information in this section.
- Try to send or receive a test fax. If you can send or receive a fax successfully, there might not be a problem.
- If you are running the test from the **Fax Setup Wizard** (Windows) or **HP Utility** (OS X), make sure the printer is not busy completing another task, such as receiving a fax or making a copy. Check the display for a message indicating that the printer is busy. If it is busy, wait until it is finished and in the idle state before running the test.
- Make sure you use the phone cord that came with the printer. If you do not use the supplied phone cord to connect from the telephone wall jack to the printer, you might not be able to send or receive faxes. After you plug in the phone cord that came with the printer, run the fax test again.
- If you are using a phone splitter, this can cause faxing problems. (A splitter is a two-cord connector that plugs into a telephone wall jack.) Try removing the splitter and connecting the printer directly to the telephone wall jack.

After you resolve any problems found, run the fax test again to make sure it passes and the printer is ready for faxing. If the **Fax Hardware Test** continues to fail and you experience problems faxing, contact HP support. Go to www.support.hp.com . This website provides information and utilities that can help you correct many common printer problems. If prompted, select your country/region, and then click **All HP Contacts** for information on calling for technical support.

### The "Fax Connected to Active Telephone Wall Jack" test failed

- Check the connection between the telephone wall jack and the printer to make sure the phone cord is secure.
- Make sure you use the phone cord that came with the printer. If you do not use the supplied phone cord to connect from the telephone wall jack to the printer, you might not be able to send or receive faxes. After you plug in the phone cord that came with the printer, run the fax test again.
- Make sure you have correctly connected the printer to the telephone wall jack. Using the phone cord supplied in the box with the printer, connect one end to your telephone wall jack, then connect the other end to the port labeled 1-LINE on the back of the printer.
- If you are using a phone splitter, this can cause faxing problems. (A splitter is a two-cord connector that plugs into a telephone wall jack.) Try removing the splitter and connecting the printer directly to the telephone wall jack.
- Try connecting a working phone and phone cord to the telephone wall jack that you are using for the printer and check for a dial tone. If you do not hear a dial tone, contact your telephone company and have them check the line.
- Try to send or receive a test fax. If you can send or receive a fax successfully, there might not be a problem.

After you resolve any problems found, run the fax test again to make sure it passes and the printer is ready for faxing.

### The "Phone Cord Connected to Correct Port on Fax" test failed

Make sure you use the phone cord that came with the printer. If you do not use the supplied phone cord to connect from the telephone wall jack to the printer, you might not be able to send or receive faxes. After you plug in the phone cord that came with the printer, run the fax test again.

If you are using a phone splitter, this can cause faxing problems. (A splitter is a two-cord connector that plugs into a telephone wall jack.) Try removing the splitter and connecting the printer directly to the telephone wall jack.

#### Plug the phone cord into the correct port

1. Using the phone cord supplied in the box with the printer, connect one end to your telephone wall jack, then connect the other end to the port labeled 1-LINE on the back of the printer.

**NOTE:** If you use the 2-EXT port to connect to the telephone wall jack, you cannot send or receive faxes. The 2-EXT port should only be used to connect other equipment, such as an answering machine.

**Figure 10-1** Back view of the printer

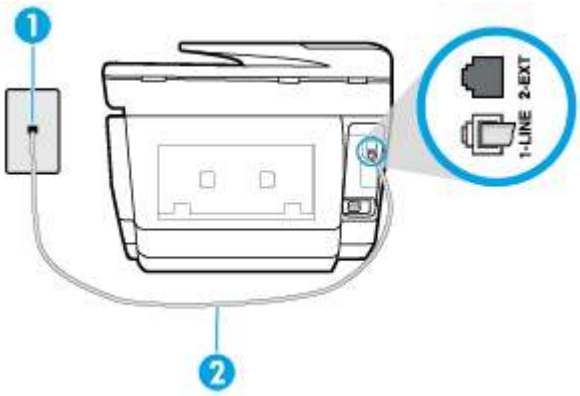


| | |
|---|---|
| 1 | Telephone wall jack |
| 2 | Use the phone cord supplied in the box with the printer to connect to the "1-LINE" port |

2. After you have connected the phone cord to the port labeled 1-LINE, run the fax test again to make sure it passes and the printer is ready for faxing.
3. Try to send or receive a test fax.

### The "Using Correct Type of Phone Cord with Fax" test failed

- Make sure you used the phone cord supplied in the box with the printer to connect to the telephone wall jack. One end of the phone cord should be connected to the port labeled 1-LINE on the back of the printer, and the other end to your telephone wall jack, as shown in the illustration.

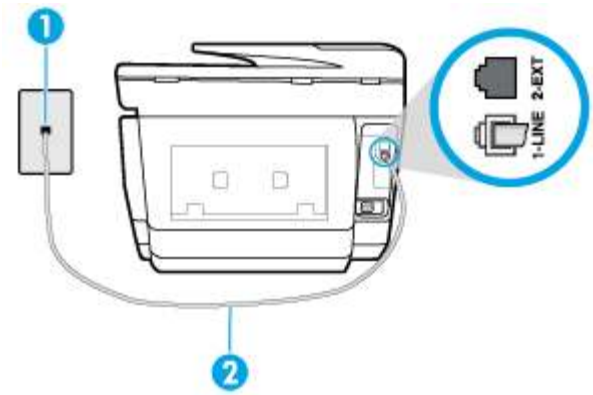


| | |
|---|---|
| **1** | Telephone wall jack |
| **2** | Use the phone cord supplied in the box with the printer to connect to the "1-LINE" port |

If the phone cord that came with the printer is not long enough, you can use a longer 2-wire phone cord to extend the length. You can purchase the cord at an electronics store that carries phone accessories.

- Check the connection between the telephone wall jack and the printer to make sure the phone cord is secure.
- Make sure you use the phone cord that came with the printer. If you do not use the supplied phone cord to connect from the telephone wall jack to the printer, you might not be able to send or receive faxes. After you plug in the phone cord that came with the printer, run the fax test again.
- If you are using a phone splitter, this can cause faxing problems. (A splitter is a two-cord connector that plugs into a telephone wall jack.) Try removing the splitter and connecting the printer directly to the telephone wall jack.

### The "Dial Tone Detection" test failed

- Other equipment, which uses the same phone line as the printer, might be causing the test to fail. To find out if other equipment is causing a problem, disconnect everything from the phone line, and then run the test again. If the **Dial Tone Detection Test** passes without the other equipment, then one or more pieces of the equipment is causing problems; try adding them back one at a time and rerunning the test each time, until you identify which piece of equipment is causing the problem.
- Try connecting a working phone and phone cord to the telephone wall jack that you are using for the printer and check for a dial tone. If you do not hear a dial tone, contact your telephone company and have them check the line.
- Make sure you have correctly connected the printer to the telephone wall jack. Using the phone cord supplied in the box with the printer, connect one end to your telephone wall jack, then connect the other end to the port labeled 1-LINE on the back of the printer.
- If you are using a phone splitter, this can cause faxing problems. (A splitter is a two-cord connector that plugs into a telephone wall jack.) Try removing the splitter and connecting the printer directly to the telephone wall jack.

- If your telephone system is not using a standard dial tone, such as some private branch exchange (PBX) systems, this might cause the test to fail. This does not cause a problem sending or receiving faxes. Try sending or receiving a test fax.
- Check to make sure the country/region setting is set appropriately for your country/region. If the country/region setting is not set or is set incorrectly, the test might fail and you might have problems sending and receiving faxes.
- Make sure you connect the printer to an analog phone line or you cannot send or receive faxes. To check if your phone line is digital, connect a regular analog phone to the line and listen for a dial tone. If you do not hear a normal sounding dial tone, it might be a phone line set up for digital phones. Connect the printer to an analog phone line and try sending or receiving a fax.
- Make sure you use the phone cord that came with the printer. If you do not use the supplied phone cord to connect from the telephone wall jack to the printer, you might not be able to send or receive faxes. After you plug in the phone cord that came with the printer, run the fax test again.

After you resolve any problems found, run the fax test again to make sure it passes and the printer is ready for faxing. If the **Dial Tone Detection** test continues to fail, contact your telephone company and have them check the phone line.

**The "Fax Line Condition" test failed**

- Make sure you connect the printer to an analog phone line or you cannot send or receive faxes. To check if your phone line is digital, connect a regular analog phone to the line and listen for a dial tone. If you do not hear a normal sounding dial tone, it might be a phone line set up for digital phones. Connect the printer to an analog phone line and try sending or receiving a fax.
- Check the connection between the telephone wall jack and the printer to make sure the phone cord is secure.
- Make sure you have correctly connected the printer to the telephone wall jack. Using the phone cord supplied in the box with the printer, connect one end to your telephone wall jack, then connect the other end to the port labeled 1-LINE on the back of the printer.
- Other equipment, which uses the same phone line as the printer, might be causing the test to fail. To find out if other equipment is causing a problem, disconnect everything from the phone line, and then run the test again.
    - If the **Fax Line Condition Test** passes without the other equipment, then one or more pieces of the equipment is causing problems; try adding them back one at a time and rerunning the test each time, until you identify which piece of equipment is causing the problem.
    - If the **Fax Line Condition Test** fails without the other equipment, connect the printer to a working phone line and continue reviewing the troubleshooting information in this section.
- If you are using a phone splitter, this can cause faxing problems. (A splitter is a two-cord connector that plugs into a telephone wall jack.) Try removing the splitter and connecting the printer directly to the telephone wall jack.
- Make sure you use the phone cord that came with the printer. If you do not use the supplied phone cord to connect from the telephone wall jack to the printer, you might not be able to send or receive faxes. After you plug in the phone cord that came with the printer, run the fax test again.

After you resolve any problems found, run the fax test again to make sure it passes and the printer is ready for faxing. If the **Fax Line Condition** test continues to fail and you experience problems faxing, contact your telephone company and have them check the phone line.

## Troubleshoot fax problems

| | |
|---|---|
| Troubleshoot fax problems. | Use an HP online troubleshooting wizard<br>Resolve problems sending or receiving a fax or faxing to your computer. |

**NOTE:** The HP online troubleshooting wizards may not be available in all languages.

## Read general instructions in the Help for specific fax problems

What kind of fax problem are you having?

### The display always shows Phone Off Hook

- You are using the wrong type of phone cord. Make sure you are using the 2-wire phone cord that came with the printer to connect the printer to your phone line. If the phone cord that came with the printer is not long enough, you can use a longer phone cord to extend the length. You can purchase the cord at an electronics store that carries phone accessories.
- Other equipment that uses the same phone line as the printer might be in use. Make sure extension phones (phones on the same phone line, but not connected to the printer) or other equipment are not in use or off the hook. For example, you cannot use the printer for faxing if an extension phone is off the hook, or if you are using a computer dial-up modem to send email or access the Internet.

### The printer is having problems sending and receiving faxes

- Make sure the printer is turned on. Look at the display on the printer. If the display is blank and (the Power button) light is not lit, the printer is turned off. Make sure the power cord is firmly connected to the printer and plugged into a power outlet. Press (the Power button) to turn on the printer.

  After turning on the printer, HP recommends you wait five minutes before sending or receiving a fax. The printer cannot send or receive faxes while it is initializing after being turned on.
- If HP Digital Fax has been enabled, you might not be able to send or receive faxes if the fax memory is full (limited by printer memory).

- Make sure you used the phone cord supplied in the box with the printer to connect to the telephone wall jack. One end of the phone cord should be connected to the port labeled 1-LINE on the back of the printer and the other end to your telephone wall jack, as shown in the illustration.

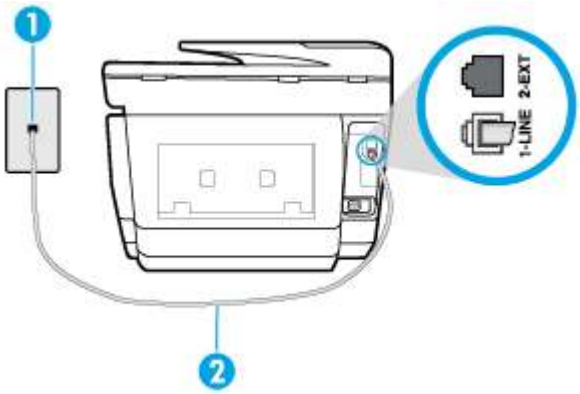


| | |
|---|---|
| 1 | Telephone wall jack |
| 2 | Use the phone cord supplied in the box with the printer to connect to the "1-LINE" port |

If the phone cord that came with the printer is not long enough, you can use a longer 2-wire phone cord to extend the length. You can purchase the cord at an electronics store that carries phone accessories.

- Try connecting a working phone and phone cord to the telephone wall jack that you are using for the printer and check for a dial tone. If you do not hear a dial tone, call your local telephone company for service.
- Other equipment, which uses the same phone line as the printer, might be in use. For example, you cannot use the printer for faxing if an extension phone is off the hook, or if you are using a computer dial-up modem to send an email or access the Internet.
- Check to see if another process has caused an error. Check the display or your computer for an error message providing information about the problem and how to solve it. If there is an error, the printer cannot send or receive a fax until the error condition is resolved.
- The phone line connection might be noisy. Phone lines with poor sound quality (noise) can cause faxing problems. Check the sound quality of the phone line by plugging a phone into the telephone wall jack and listening for static or other noise. If you hear noise, turn **Error Correction Mode** (ECM) off and try faxing again. If the problem persists, contact your telephone company.
- If you are using a digital subscriber line (DSL) service, make sure that you have a DSL filter connected or you cannot fax successfully.
- Make sure the printer is not connected to a telephone wall jack that is set up for digital phones. To check if your phone line is digital, connect a regular analog phone to the line and listen for a dial tone. If you do not hear a normal sounding dial tone, it might be a phone line set up for digital phones.
- If you are using either a private branch exchange (PBX) or an integrated services digital network (ISDN) converter/terminal adapter, make sure the printer is connected to the correct port and the terminal adapter is set to the correct switch type for your country/region, if possible.
- If the printer shares the same phone line with a DSL service, the DSL modem might not be grounded correctly. If the DSL modem is not grounded correctly, it can create noise on the phone line. Phone lines with poor sound quality (noise) can cause faxing problems. You can check the sound quality of the phone line by plugging a phone into the telephone wall jack and listening for static or other noise. If you

hear noise, turn off your DSL modem and completely remove power for at least 15 minutes. Turn the DSL modem back on and listen to the dial tone again.

**NOTE:** You might notice static on the phone line again in the future. If the printer stops sending and receiving faxes, repeat this process.

If the phone line is still noisy, contact your telephone company. For information on turning your DSL modem off, contact your DSL provider for support.

- If you are using a phone splitter, this can cause faxing problems. (A splitter is a two-cord connector that plugs into a telephone wall jack.) Try removing the splitter and connecting the printer directly to the telephone wall jack.

## The printer cannot receive faxes, but can send faxes

- If you are not using a distinctive ring service, check to make sure that the **Distinctive Ring** feature on the printer is set to **All Standard Rings** .
- If **Auto Answer** is set to **Off** , you need to receive faxes manually; otherwise, the printer cannot receive the fax.
- If you have a voice mail service at the same phone number you use for fax calls, you must receive faxes manually, not automatically. This means that you must be available to respond in person to incoming fax calls.
- If you have a computer dial-up modem on the same phone line with the printer, check to make sure that the software that came with your modem is not set to receive faxes automatically. Modems that are set up to receive faxes automatically take over the phone line to receive all incoming faxes, which prevents the printer from receiving fax calls.
- If you have an answering machine on the same phone line with the printer, you might have one of the following problems:
  - Your answering machine might not be set up correctly with the printer.
  - Your outgoing message might be too long or too loud to allow the printer to detect fax tones, and the sending fax machine might disconnect.
  - Your answering machine might not have enough quiet time after your outgoing message to allow the printer to detect fax tones. This problem is most common with digital answering machines.

  The following actions might help solve these problems:
  - When you have an answering machine on the same phone line you use for fax calls, try connecting the answering machine directly to the printer.
  - Make sure the printer is set to receive faxes automatically.
  - Make sure the **Rings to Answer** setting is set to a greater number of rings than the answering machine.
  - Disconnect the answering machine and then try receiving a fax. If faxing is successful without the answering machine, the answering machine might be causing the problem.
  - Reconnect the answering machine and record your outgoing message again. Record a message that is approximately 10 seconds in duration. Speak slowly and at a low volume when recording your message. Leave at least 5 seconds of silence at the end of the voice message. There should be no background noise when recording this silent time. Try to receive a fax again.

    **NOTE:** Some digital answering machines might not retain the recorded silence at the end of your outgoing message. Play back your outgoing message to check.

- If the printer shares the same phone line with other types of phone equipment, such as an answering machine, a computer dial-up modem, or a multi-port switch box, the fax signal level might be reduced. The signal level can also be reduced if you use a splitter or connect extra cables to extend the length of your phone. A reduced fax signal can cause problems during fax reception.

  To find out if other equipment is causing a problem, disconnect everything except the printer from the phone line, and then try to receive a fax. If you can receive faxes successfully without the other equipment, one or more pieces of the other equipment is causing problems; try adding them back one at a time and receiving a fax each time, until you identify which equipment is causing the problem.

- If you have a special ring pattern for your fax phone number (using a distinctive ring service through your telephone company), make sure that the **Distinctive Ring** feature on the printer is set to match.

### The printer cannot send faxes, but can receive faxes

- The printer might be dialing too fast or too soon. You might need to insert some pauses in the number sequence. For example, if you need to access an outside line before dialing the phone number, insert a pause following the access number. If your number is 95555555, and 9 accesses an outside line, you might insert pauses as follows: 9-555-5555. To enter a pause in the fax number you are typing, touch the ***** repeatedly, until a dash (**-**) appears on the display.

  You can also send the fax using monitor dialing. This enables you to listen to the phone line as you dial. You can set the pace of your dialing and respond to prompts as you dial.

- The number you entered when sending the fax is not in the proper format or the receiving fax machine is having problems. To check this, try calling the fax number from a telephone and listen for fax tones. If you cannot hear fax tones, the receiving fax machine might not be turned on or connected, or a voice mail service could be interfering with the recipient's phone line. You can also ask the recipient to check the receiving fax machine for any problems.

### Fax tones are recorded on my answering machine

- When you have an answering machine on the same phone line you use for fax calls, try connecting the answering machine directly to the printer. If you do not connect the answering machine as recommended, fax tones might be recorded on your answering machine.

- Make sure the printer is set to receive faxes automatically and that the **Rings to Answer** setting is correct. The number of rings to answer for the printer should be greater than the number of rings to answer for the answering machine. If the answering machine and the printer are set to the same number of rings to answer, both devices answer the call and fax tones are recorded on the answering machine.

- Set your answering machine to a low number of rings and the printer to answer in the maximum number of rings supported. (The maximum number of rings varies by country/region.) In this setup, the answering machine answers the call and the printer monitors the line. If the printer detects fax tones, the printer receives the fax. If the call is a voice call, the answering machine records the incoming message.

### The computer cannot receive faxes (HP Digital Fax)

- The computer selected to receive faxes is turned off. Make sure the computer selected to receive faxes is switched on at all times.

- Different computers are configured for setup and receiving faxes and one of them may be switched off. If the computer receiving faxes is different from the one used for setup, both computers should be switched on at all times.

- HP Digital Fax is not activated or the computer is not configured to receive faxes. Activate HP Digital Fax and make sure the computer is configured to receive faxes.

# Network and connection issues

What do you want to do?

## Fix wireless connection

Choose one of the following troubleshooting options.

| | |
|---|---|
| HP Print and Scan Doctor | The HP Print and Scan Doctor is a utility that will try to diagnose and fix the issue automatically.<br>**NOTE:** This utility is only available for Windows operating system. |
| Use an HP online troubleshooting wizard | • Troubleshoot your wireless problem, whether your printer has never been connected or it was connected and is no longer working.<br>• Troubleshoot a firewall or antivirus issue, if you suspect that it is preventing your computer from connecting to the printer. |

**NOTE:** The HP Print and Scan Doctor and the HP online troubleshooting wizards may not be available in all languages.

### Read general instructions in the Help for wireless troubleshooting

Check the network configuration or print the wireless test report to assist in diagnosing network connection issues.

1. From the Home screen, touch (Wireless) and then touch ( **Settings** ).
2. Touch **Print Reports**, and then touch **Network Configuration Page** or **Wireless Test Report**.

## Find network settings for wireless connection

Choose one of the following troubleshooting options.

| | |
|---|---|
| HP Print and Scan Doctor | The HP Print and Scan Doctor is a utility that can tell you the network name (SSID) and password (network key).<br>**NOTE:** This utility is only available for Windows operating system. The Windows computer you are running the HP Print and Scan Doctor on should be connected to the network using a wireless connection.<br>To check the wireless settings, open the HP Print and Scan Doctor, click on the **Network** tab at the top, select **Show Advanced Info**, and then select **Show Wireless Info**. You can also find the wireless settings by clicking on the **Network** tab at the top and selecting **Open router web page**. |
| Use an HP online troubleshooting wizard | Learn how to find your network name (SSID) and wireless password. |

**NOTE:** The HP Print and Scan Doctor and the HP online troubleshooting wizards may not be available in all languages.

## Fix Wi-Fi Direct connection

| | |
|---|---|
| Use an HP online troubleshooting wizard | Troubleshoot your Wi-Fi Direct problem or learn how to configure Wi-Fi Direct. |

**NOTE:** The HP online troubleshooting wizards may not be available in all languages.

**Read general instructions in the Help for Wi-Fi Direct troubleshooting**

1. Check the printer to confirm that Wi-Fi Direct is turned on:

   ▲ From the printer control panel, touch or swipe down the tab at the top of the screen to open the Dashboard, and then touch  (Wi-Fi Direct).

2. From your wireless computer or mobile device, turn on the Wi-Fi connection, and then search for and connect to the Wi-Fi Direct name of your printer.
3. Enter the Wi-Fi Direct password when prompted.
4. If you are using a mobile device, make sure you have installed a compatible printing app. For more information, visit the HP Mobile Printing website at www.hp.com/go/mobileprinting. If a local version of this website is not available in your country/region or language, you might be directed to the HP Mobile Printing website in another country/region or language.

## Fix Ethernet connection

Check the following:

- The network is operational and the network hub, switch, or router is turned on.
- The Ethernet cable is properly connected between the printer and the router. The Ethernet cable is plugged into the Ethernet port on the printer and the light near the connector lights up when connected.
- Antivirus programs, including spyware protection programs, are not impacting your network connection to the printer. If you know that antivirus or firewall software is preventing your computer from connecting to the printer, use the HP online firewall troubleshooter to help solve the problem.
- HP Print and Scan Doctor

  Run the HP Print and Scan Doctor to troubleshoot the issue automatically. The utility will try to diagnose and fix the issue. The HP Print and Scan Doctor may not be available in all languages.

# Printer hardware issues

**TIP:** Run the HP Print and Scan Doctor to diagnose and automatically fix printing, scanning, and copying issues. The application is only available in some languages.

**The printer shuts down unexpectedly**

- Check the power and power connections.
- Make sure the printer's power cord is connected firmly to a functioning power outlet.

**Printhead alignment fails**

- If the alignment process fails, make sure you have loaded unused, plain white paper into the input tray. If you have colored paper loaded in the input tray when you align the printhead, the alignment fails.
- If the alignment process fails repeatedly, you may need to clean the printhead, or you might have a defective sensor. To clean the printhead, see Maintain the printhead and cartridges.
- If cleaning the printhead does not solve the problem, contact HP support. Go to www.support.hp.com . This website provides information and utilities that can help you correct many common printer

problems. If prompted, select your country/region, and then click **All HP Contacts** for information on calling for technical support.

**Resolve printer failure**

Complete the following steps to resolve such problems.

1. Press (the Power button) to turn off the printer.
2. Unplug the power cord, and then plug in the power cord again.
3. Press (the Power button) to turn on the printer.

If this problem persists, write down the error code provided in the message, and then contact HP support. For more information about contacting HP support, see HP support.

# Get help from the printer control panel

You can use the printer's help topics to learn more about the printer, and some help topics include animations that guide you through procedures, such as clearing jams.

To access the Help menu from the Home screen or contextual help for a screen, touch ? on the printer control panel.

# Understand printer reports

You can print the following reports to help troubleshoot problems with the printer.

- Printer status report
- Network configuration page
- Print quality report
- Wireless test report
- Web access test report

**To print a printer report**

1. From the printer control panel, touch or swipe down the tab at the top of the screen to open the Dashboard, touch ( **Setup** ).
2. Touch **Reports** .
3. Select a printer report to print.

## Printer status report

Use the printer status report to view current printer information and cartridge status. Also use the printer status report to help you troubleshoot problems with the printer.

The printer status report also contains a log of recent events.

If you need to call HP, it is often useful to print the printer status report before calling.

### Network configuration page

If the printer is connected to a network, you can print a network configuration page to view the network settings for the printer and a list of networks detected by your printer. The last page of the report includes a list of all detectable wireless networks in the area, along with signal strength and the channels being used. This might help you select a channel for your network which is not heavily used by other networks (which will improve network performance).

**NOTE:** In order to get the list of detected wireless networks in the area, the wireless radio on the printer should be turned on. If it is off or if the printer is connected using Ethernet, the list is not displayed.

You can use the network configuration page to help troubleshoot network connectivity problems. If you need to call HP, it is often useful to print this page before calling.

### Print quality report

Print quality problems can have many causes-software settings, a poor image file, or the printing system itself. If you are unhappy with the quality of your prints, a Print Quality Report page can help you determine if the printing system is working correctly.

### Wireless test report

When you print the Wireless Test Report, a number of tests are run to check various conditions of the printer wireless connection. The report shows the results of the tests. If an issue is discovered, message along with how to fix it is provided at the top of the report. Some key wireless configuration details are provided at the bottom section of the report.

### Web access test report

Print the web access report to help identify internet connectivity issues which can affect Web Services.

## Solve problems using Web Services

If you are having problems using Web Services, such as **HP ePrint** and print apps, check the following:

- Make sure the printer is connected to the Internet using an Ethernet or wireless connection.

  **NOTE:** You cannot use these web features if the printer is connected using a USB cable.

- Make sure the latest product updates have been installed on the printer.
- Make sure Web Services is enabled on the printer. For more information, see Set up Web Services.
- Make sure the network hub, switch, or router is turned on and working correctly.
- If you are connecting the printer using an Ethernet cable, make sure you are not using a phone cord or a crossover cable to connect the printer to the network, and that the Ethernet cable is securely connected to the printer. For more information, see Network and connection issues.
- If you are connecting the printer using a wireless connection, make sure the wireless network is functioning properly. For more information, see Network and connection issues.
- If you are using **HP ePrint** , check the following:

- Make sure the printer's email address is correct.
- Make sure that the printer's email address is the only address listed in the “To” line of the email message. If other email addresses are listed in the “To” line, the attachments you are sending might not print.
- Make sure you are sending documents that meet the **HP ePrint** requirements. For more information, visit HP Connected (www.hpconnected.com). This site might not be available in all countries/regions.

- If your network uses proxy settings when connecting to the Internet, make sure the proxy settings you are entering are valid:
  - Check the settings being used by the web browser you are using (such as Internet Explorer, Firefox, or Safari).
  - Check with the IT administrator or person who set up your firewall.

    If the proxy settings used by your firewall have changed, you must update these settings in either the printer control panel or the embedded web server. If these settings are not updated, you will not be able to use Web Services.

    For more information, see Set up Web Services.

**TIP:** For additional help on setting up and using Web Services, visit HP Connected (www.hpconnected.com). This site might not be available in all countries/regions.

# Maintain the printer

What do you want to do?

## Clean the scanner glass

Dust or dirt on the scanner glass, scanner lid backing, or scanner frame can slow down performance, degrade the quality of scans, and affect the accuracy of special features such as fitting copies to a certain page size.

### To clean the scanner glass

**WARNING!** Before cleaning the printer, turn the printer off by pressing (the Power button) and unplug the power cord from the electrical socket.

1. Lift the scanner lid.



2. Clean the scanner glass and lid backing by using a soft, lint-free cloth that has been sprayed with a mild glass cleaner.



**CAUTION:** Use only glass cleaner to clean the scanner glass. Avoid cleaners that contain abrasives, acetone, benzene, and carbon tetrachloride, all of which can damage the scanner glass. Avoid isopropyl alcohol because it can leave streaks on the scanner glass.

**CAUTION:** Do not spray the glass cleaner directly on the scanner glass. If too much glass cleaner is applied, the cleaner could leak under the scanner glass and damage the scanner.

3. Close the scanner lid, and turn on the printer.

## Clean the exterior

**WARNING!** Before cleaning the printer, turn the printer off by pressing (the Power button) and unplug the power cord from the electrical socket.

Use a soft, damp, lint-free cloth to wipe dust, smudges, and stains off of the case. Keep fluids away from the interior of the printer, as well as from the printer control panel.

## Clean the document feeder

If the document feeder picks up multiple pages or if it does not pick up plain paper, you can clean the rollers and separator pad.

### To clean the rollers or separator pad

**WARNING!** Before cleaning the printer, turn the printer off by pressing (the Power button) and unplug the power cord from the electrical socket.

1. Remove all originals from the document feeder tray.

2. Lift the document feeder cover.



This provides easy access to the rollers (1) and separator pad (2).




| | |
|---|---|
| 1 | Rollers |
| 2 | Separator pad |

3. Lightly dampen a clean lint-free cloth with distilled water, then squeeze any excess liquid from the cloth.
4. Use the damp cloth to wipe any residue off the rollers or separator pad.

**NOTE:** If the residue does not come off using distilled water, try using isopropyl (rubbing) alcohol.

5. Close the cover of the document feeder.

## Maintain the printhead and cartridges

If you are experiencing problems with printing, you might have a problem with the printhead. You should perform the procedures in the following sections only when directed to do so for resolving print quality issues.

Performing the aligning and cleaning procedures unnecessarily can waste ink and shorten the life of the cartridges.

- Clean the printhead if your printed output is streaked or has any incorrect or missing colors.

  There are three stages of cleaning. Each stage lasts about two minutes, uses one sheet of paper, and uses an increasing amount of ink. After each stage, review the quality of the printed page. You should only initiate the next phase of cleaning if the print quality is poor.

  If print quality still seems poor after you complete all stages of cleaning, try aligning the printhead. If print quality problems persist after cleaning and aligning, contact HP support. For more information, see HP support.

- Align the printhead when the printer status page shows streaking or white lines through any of the blocks of color, or if you are having print quality issues with your printouts.

  The printer automatically aligns the printhead during the initial setup.

**NOTE:** Cleaning uses ink, so clean the printhead only when necessary. The cleaning process takes a few minutes. Some noise might be generated in the process.

Always use the Power button to turn off the printer. Turning the printer off improperly can cause print quality problems.

**To clean or align the printhead**

1. Load Letter or A4 unused plain white paper into the input tray. For more information, see Load paper.
2. From the printer control panel, touch or swipe down the tab at the top of the screen to open the Dashboard, and then touch (**Setup**).
3. Touch **Printer Maintenance**, select the desired option, and then follow the onscreen instructions.

**NOTE:** You can also do the same from the HP printer software or embedded web server (EWS). To access the software or EWS, see Open the HP printer software (Windows) or Open the embedded web server.

# Restore original factory defaults and settings

If you disable some functions or change some settings and want to change them back, you can restore the printer to the original factory settings or network settings.

**To restore the printer to the original factory settings**

1. From the printer control panel, touch or swipe down the tab at the top of the screen to open the Dashboard, and then touch (**Setup**).
2. Touch **Printer Maintenance**.
3. Touch **Restore**.
4. Touch **Restore Settings**.
5. Select which function you would like to restore to the original factory settings:
   - Copy
   - Scan
   - Fax
   - Photo
   - Network
   - Web Services
   - Printer Setup

   Touch **Restore**.

   A message appears stating that the settings will be restored.
6. Touch **Yes**.

**To restore the printer to the original factory defaults**

1. From the printer control panel, touch or swipe down the tab at the top of the screen to open the Dashboard, and then touch ( **Setup** ).
2. Touch **Printer Maintenance** .
3. Touch **Restore**.
4. Touch **Restore Factory Defaults**.

   A message appears stating that the factory defaults will be restored.
5. Touch **Restore**.

**To restore the printer to the original network settings**

1. From the printer control panel, touch or swipe down the tab at the top of the screen to open the Dashboard, and then touch ( **Setup** ).
2. Touch **Network Setup**.
3. Touch **Restore Network Settings**.

   A message appears stating that the network defaults will be restored.
4. Touch **Yes**.
5. Print the network configuration page and verify that the network settings have been reset.

**NOTE:** When you reset the printer network settings, previously configured wireless and Ethernet settings (such as the link speed or IP address) are removed. The IP address is set back to the Automatic mode.

**TIP:** You can visit the HP online support website at www.support.hp.com for information and utilities that can help you correct many common printer problems.

(Windows) Run the HP Print and Scan Doctor to diagnose and automatically fix printing, scanning, and copying issues. The application is only available in some languages.

# HP support

For the latest product updates and support information, visit the printer support website at www.support.hp.com . HP online support provides a variety of options for help with your printer:

| | |
|---|---|
| | **Drivers & downloads:** Download software drivers and updates, as well as product manuals and documentation that came in the box with your printer. |
| | **HP support forums:** Visit HP Support Forums for answers to common questions and issues. You can view questions posted by other HP customers, or sign in and post your own questions and comments. |
| | **Troubleshooting:** Use HP online tools to detect your printer and find recommended solutions. |

## Contact HP

If you need help from an HP technical support representative to solve a problem, visit the Contact Support website. The following contact options are available at no cost for in-warranty customers (HP agent-assisted support for out-of warranty customers may require a fee):

| | |
|---|---|
| | Chat with an HP support agent online. |
| | Call an HP support agent. |

When contacting HP support, be prepared to provide the following information:

- Product name (Located on the printer, such as HP OfficeJet Pro 8740)
- Product number (located near the cartridge access area)




- Serial number (located on the back or bottom of the printer)

## Register printer

By taking just a few quick minutes to register, you can enjoy quicker service, more efficient support, and product support alerts. If you did not register your printer while installing the software, you can register now at http://www.register.hp.com.

## Additional warranty options

Extended service plans are available for the printer at additional costs. Go to www.support.hp.com , select your country/region and language, then explore the extended warranty options available for your printer.

# A Technical information

This section contains the following topics:


- Specifications
- Regulatory information
- Environmental product stewardship program


## Specifications

For more information, visit www.support.hp.com . Select your country or region. Click **Product Support & Troubleshooting**. Enter the name shown on the front of the printer, and then select **Search**. Click **Product information**, and then click **Product specifications**.

**System requirements**

- Software and system requirements can be found in the Readme file, which is available on the HP printer software CD provided with your printer.
- For information about future operating system releases and support, visit the HP online support website at www.support.hp.com .

**Environmental specifications**

- Operating temperature: 5° to 40° C (41° to 104° F)
- Operating humidity: 15 to 80% RH non-condensing
- Recommended operating conditions: 15° to 32° C (59° to 90° F)
- Recommended relative humidity: 20 to 80% noncondensing

**Tray 1 capacity**

- Plain paper sheets (60 to 105 g/m2 [16 to 28 lb]): Up to 250
- Envelopes: Up to 30
- Index cards: Up to 50
- Photo paper sheets: Up to 50

**Tray 2 capacity**

- Plain paper sheets (60 to 105 g/m$^2$ [16 to 28 lb]): Up to 250

**Output tray capacity**

- Plain paper sheets (60 to 105 g/m2 [16 to 28 lb]): Up to 150
- Envelopes: Up to 30
- Index cards: Up to 80
- Photo paper sheets: Up to 100

**Document feeder capacity**

- Plain paper sheets (60 to 90 g/m² [16 to 24 lb]): Up to 50

**Paper size and weights**

For the list of supported paper sizes, see the HP printer software.

- Plain paper: 60 to 105 g/m² (16 to 28 lb)
- Envelopes: 75 to 90 g/m² (20 to 24 lb)
- Cards: Up to 200 g/m² (110 lb index maximum)
- Photo paper: 300 g/m² (80 lb)

**Print specifications**

- Print speeds vary according to the complexity of the document and printer model
- Method: drop-on-demand thermal officejet
- Language: PCL 6, PCL 5, PDF, PostScript
- Print resolution:

  For a list of supported print resolutions, visit the printer support website at www.support.hp.com.
- Print margins:

  For margin settings of different media, visit the printer support website at www.support.hp.com.

**Copy specifications**

- Digital image processing
- Copy speeds vary according to the complexity of the document and printer model

**Scan specifications**

- Resolution: Up to 1200 x 1200 ppi optical

  For more information about scan resolution, see the HP printer software.
- Color: 24-bit color, 8-bit grayscale (256 levels of gray)
- Maximum scan size from scanner glass:
  - U.S. Letter (A): 215.9 x 279.4 mm (8.5 inches x 11 inches)
  - U.S. Legal: 215.9 x 355.6 mm (8.5 inches x 14 inches)
  - ISO A4: 210 x 297mm (8.27 inches x 11.7 inches)
- Maximum scan size from document feeder:
  - Two-sided (Duplex): 210 x 297 mm (8.27 x 11.69 inches)
  - One-sided: 216 x 356 mm (8.5 x 14 inches)

**Fax specifications**

- Walk-up black-and-white and color fax capability.
- Manual fax send and receive.

- Automatic busy redial up to five times (varies by model).
- Automatic no-answer redial up to one time (varies by model).
- Confirmation and activity reports.
- CCITT/ITU Group 3 fax with Error Correction Mode.
- 33.6 Kbps transmission.
- 4 seconds per page speed at 33.6 Kbps (based on ITU-T Test Image #1 at standard resolution). More complicated pages or higher resolution takes longer and uses more memory.
- Ring detect with automatic fax/answering machine switching.
- Fax resolution:

| | Photo (dpi) | Very Fine (dpi) | Fine (dpi) | Standard (dpi) |
|---|---|---|---|---|
| Black | 205 x 196 (8-bit grayscale) | 308 x 300 | 205 x 196 | 205 x 98 |
| Color | 205 x 200 | 205 x 200 | 205 x 200 | 205 x 200 |

- Fax to PC specifications
  - Supported file types: Uncompressed TIFF
  - Supported fax types: black-and-white faxes

**Cartridge yield**

- Visit www.hp.com/go/learnaboutsupplies for more information on estimated cartridge yields.

# Regulatory information

The printer meets product requirements from regulatory agencies in your country/region.

This section contains the following topics:

- Regulatory Model Number
- FCC statement
- Notice to users in Korea
- VCCI (Class B) compliance statement for users in Japan
- Notice to users in Japan about the power cord
- Noise emission statement for Germany
- Visual display workplaces statement for Germany
- Notice to users of the U.S. telephone network: FCC requirements
- Notice to users of the Canadian telephone network
- Notice to users of the German telephone network
- Australia wired fax statement
- European Union Regulatory Notice
  - Products with wireless functionality

  - European telephone network declaration (Modem/Fax)
- Declaration of conformity
- Regulatory information for wireless products
  - Exposure to radio frequency radiation
  - Notice to users in Brazil
  - Notice to users in Canada
  - Notice to users in Taiwan
  - Notice to users in Mexico
  - Notice to users in Japan
  - Notice to users in Korea


## Regulatory Model Number

For regulatory identification purposes, your product is assigned a Regulatory Model Number. The Regulatory Model Number for your product is SNPRC-1602-02. This regulatory number should not be confused with the marketing name (HP OfficeJet Pro 8740 All-in-One Printer, etc.) or product number (D9L20A, etc.).

## FCC statement

### FCC statement

The United States Federal Communications Commission (in 47 CFR 15.105) has specified that the following notice be brought to the attention of users of this product.

This equipment has been tested and found to comply with the limits for a Class B digital device, pursuant to Part 15 of the FCC Rules. These limits are designed to provide reasonable protection against harmful interference in a residential installation. This equipment generates, uses and can radiate radio frequency energy and, if not installed and used in accordance with the instructions, may cause harmful interference to radio communications. However, there is no guarantee that interference will not occur in a particular installation. If this equipment does cause harmful interference to radio or television reception, which can be determined by turning the equipment off and on, the user is encouraged to try to correct the interference by one or more of the following measures:

- Reorient or relocate the receiving antenna.
- Increase the separation between the equipment and the receiver.
- Connect the equipment into an outlet on a circuit different from that to which the receiver is connected.
- Consult the dealer or an experienced radio/TV technician for help.

For further information, contact:

Manager of Corporate Product Regulations
HP Inc. 1501 Page Mill Road,
Palo Alto, CA 94304, U.S.A.

Modifications (part 15.21)

The FCC requires the user to be notified that any changes or modifications made to this device that are not expressly approved by HP may void the user's authority to operate the equipment.

This device complies with Part 15 of the FCC Rules. Operation is subject to the following two conditions: (1) this device may not cause harmful interference, and (2) this device must accept any interference received, including interference that may cause undesired operation.

## Notice to users in Korea

| | |
|---|---|
| B 급 기기<br>(가정용 방송통신기기) | 이 기기는 가정용(B급)으로 전자파적합등록을 한 기기로서 주 로 가정에서 사용하는 것을 목적으로 하며, 모든 지역에서 사 용할 수 있습니다. |

## VCCI (Class B) compliance statement for users in Japan

この装置は、クラスB情報技術装置です。この装置は、家庭環境で使用することを目的としていますが、この装置がラジオやテレビジョン受信機に近接して使用されると、受信障害を引き起こすことがあります。取扱説明書に従って正しい取り扱いをして下さい。

VCCI-B

## Notice to users in Japan about the power cord

製品には、同梱された電源コードをお使い下さい。
同梱された電源コードは、他の製品では使用出来ません。

## Noise emission statement for Germany

**Geräuschemission**

LpA < 70 dB am Arbeitsplatz im Normalbetrieb nach DIN 45635 T. 19

## Visual display workplaces statement for Germany

**GS-Erklärung (Deutschland)**

Das Gerät ist nicht für die Benutzung im unmittelbaren Gesichtsfeld am Bildschirmarbeitsplatz vorgesehen. Um störende Reflexionen am Bildschirmarbeitsplatz zu vermeiden, darf dieses Produkt nicht im unmittelbaren Gesichtsfeld platziert werden.

# Notice to users of the U.S. telephone network: FCC requirements

## Notice to users of the U.S Telephone network: FCC requirements

This equipment complies with Part 68 of the FCC rules and the requirements adopted by the ACTA. On the rear (or bottom) of this equipment is a label that contains, among other information, a product identifier in the format US:AAAEQ##TXXXX. If requested, this number must be provided to the telephone company.

Applicable connector jack Universal Service Order Codes ("USOC") for the Equipment is: RJ-11C.

A plug and jack used to connect this equipment to the premises wiring and telephone network must comply with the applicable FCC Part 68 rules and requirements adopted by the ACTA. A compliant telephone cord and modular plug is provided with this product. It is designed to be connected to a compatible modular jack that is also compliant. See installation instructions for details.

The REN is used to determine the number of devices that may be connected to a telephone line. Excessive RENs on a telephone line may result in the devices not ringing in response to an incoming call. In most but not all areas, the sum of RENs should not exceed five (5.0). To be certain of the number of devices that may be connected to a line, as determined by the total RENs, contact the local telephone company. For products approved after July 23, 2001, the REN for this product is part of the product identifier that has the format US:AAAEQ##TXXXX. The digits represented by ## are the REN without a decimal point (e.g., 00 is a REN of 0.0).

If this equipment causes harm to the telephone network, the telephone company will notify you in advance that temporary discontinuance of service may be required. But if advance notice isn't practical, the telephone company will notify the customer as soon as possible. Also, you will be advised of your right to file a complaint with the FCC if you believe it is necessary.

The telephone company may make changes in its facilities, equipment, operations or procedures that could affect the operation of the equipment. If this happens the telephone company will provide advance notice in order for you to make necessary modifications to maintain uninterrupted service.

If trouble is experienced with this equipment, please contact the manufacturer, or look elsewhere in this manual, for repair or warranty information. If the equipment is causing harm to the telephone network, the telephone company may request that you disconnect the equipment until the problem is resolved.

Connection to party line service is subject to state tariffs. Contact the state public utility commission, public service commission or corporation commission for information.

If your home has specially wired alarm equipment connected to the telephone line, ensure the installation of this equipment does not disable your alarm equipment. If you have questions about what will disable alarm equipment, consult your telephone company or a qualified installer.

WHEN PROGRAMMING EMERGENCY NUMBERS AND(OR) MAKING TEST CALLS TO EMERGENCY NUMBERS:

1) Remain on the line and briefly explain to the dispatcher the reason for the call.

2) Perform such activities in the off-peak hours, such as early morning or late evenings.

**Note** The FCC hearing aid compatibility rules for telephones are not applicable to this equipment.

The Telephone Consumer Protection Act of 1991 makes it unlawful for any person to use a computer or other electronic device, including FAX machines, to send any message unless such message clearly contains in a margin at the top or bottom of each transmitted page or on the first page of the transmission, the date and time it is sent and an identification of the business or other entity, or other individual sending the message and the telephone number of the sending machine or such business, other entity, or individual. (The telephone number provided may not be a 900 number or any other number for which charges exceed local or long-distance transmission charges.)

In order to program this information into your FAX machine, you should complete the steps described in the software.

## Notice to users of the Canadian telephone network

**Note à l'attention des utilisateurs du réseau téléphonique canadien/Notice to users of the Canadian telephone network**

Cet appareil est conforme aux spécifications techniques des équipements terminaux d'Industrie Canada. Le numéro d'enregistrement atteste de la conformité de l'appareil. L'abréviation IC qui précède le numéro d'enregistrement indique que l'enregistrement a été effectué dans le cadre d'une Déclaration de conformité stipulant que les spécifications techniques d'Industrie Canada ont été respectées. Néanmoins, cette abréviation ne signifie en aucun cas que l'appareil a été validé par Industrie Canada.

Pour leur propre sécurité, les utilisateurs doivent s'assurer que les prises électriques reliées à la terre de la source d'alimentation, des lignes téléphoniques et du circuit métallique d'alimentation en eau sont, le cas échéant, branchées les unes aux autres. Cette précaution est particulièrement importante dans les zones rurales.

**Remarque** Le numéro REN (Ringer Equivalence Number) attribué à chaque appareil terminal fournit une indication sur le nombre maximal de terminaux qui peuvent être connectés à une interface téléphonique. La terminaison d'une interface peut se composer de n'importe quelle combinaison d'appareils, à condition que le total des numéros REN ne dépasse pas 5.

Basé sur les résultats de tests FCC Partie 68, le numéro REN de ce produit est 0.0B.

This equipment meets the applicable Industry Canada Terminal Equipment Technical Specifications. This is confirmed by the registration number. The abbreviation IC before the registration number signifies that registration was performed based on a Declaration of Conformity indicating that Industry Canada technical specifications were met. It does not imply that Industry Canada approved the equipment.

Users should ensure for their own protection that the electrical ground connections of the power utility, telephone lines and internal metallic water pipe system, if present, are connected together. This precaution might be particularly important in rural areas.

**Note** The REN (Ringer Equivalence Number) assigned to each terminal device provides an indication of the maximum number of terminals allowed to be connected to a telephone interface. The termination on an interface might consist of any combination of devices subject only to the requirement that the sum of the Ringer Equivalence Numbers of all the devices does not exceed 5.

The REN for this product is 0.0B, based on FCC Part 68 test results.

## Notice to users of the German telephone network

**Hinweis für Benutzer des deutschen Telefonnetzwerks**

Dieses HP-Fax ist nur für den Anschluss eines analogen Public Switched Telephone Network (PSTN) gedacht. Schließen Sie den TAE N-Telefonstecker, der im Lieferumfang des HP All-in-One enthalten ist, an die Wandsteckdose (TAE 6) Code N an. Dieses HP-Fax kann als einzelnes Gerät und/oder in Verbindung (mit seriellem Anschluss) mit anderen zugelassenen Endgeräten verwendet werden.

## Australia wired fax statement

In Australia, the HP device must be connected to Telecommunication Network through a line cord which meets the requirements of the Technical Standard AS/ACIF S008.

## European Union Regulatory Notice



Products bearing the CE marking comply with one or more of the following EU Directives as may be applicable: Low Voltage Directive 2006/95/EC, EMC Directive 2004/108/EC, Ecodesign Directive 2009/125/EC, R&TTE Directive 1999/5/EC, RoHS Directive 2011/65/EU. Compliance with these directives is assessed using applicable European Harmonised Standards. The full Declaration of Conformity can be found at the following website: www.hp.com/go/certificates (Search with the product model name or its Regulatory Model Number (RMN), which may be found on the regulatory label.)

The point of contact for regulatory matters is:

HP Deutschland GmbH, HQ-TRE, Schickardstrasse 32, 71034 Boeblingen, Germany

### Products with wireless functionality

#### EMF

- This product meets international guidelines (ICNIRP) for exposure to radio frequency radiation.

  If it incorporates a radio transmitting and receiving device that in normal use, a separation distance of 20 cm ensures that radio frequency exposure levels comply with EU requirements.

#### Wireless functionality in Europe

- This product is designed for use without restrictions in all EU countries plus Iceland, Liechtenstein, Norway and Switzerland.

### European telephone network declaration (Modem/Fax)

HP products with FAX capability comply with the requirements of the R&TTE Directive 1999/5/EC (Annex II) and carry the CE marking accordingly. However, due to differences between the individual PSTNs provided in different countries/regions, the approval does not, of itself, give an unconditional assurance of successful operation on every PSTN network termination point. In the event of problems, you should contact your equipment supplier in the first instance.

# Declaration of conformity

## DECLARATION OF CONFORMITY

according to ISO/IEC 17050-1 and EN 17050-1

**DoC #: SNPRC-1602-02-A**

| | |
|---|---|
| **Supplier's Name:** | **Hewlett Packard Singapore (Pte) Ltd** |
| **Supplier's Address:** | 138 Depot Road, #04-01, Singapore 109683 |
| **declares, that the product** | |
| **Product Name and Model:** | HP OfficeJet Pro 8730 All-in-OnePrinter / HP OfficeJet Pro 8734 All-in-One Printer / HP OfficeJet Pro 8735 All-in-One Printer / HP OfficeJet Pro 8736 All-in-One Printer / HP OfficeJet Pro 8740 All-in-One Printer / HP OfficeJet Pro 8743 All-in-One Printer / HP OfficeJet Pro 8744 All-in-One Printer / HP OfficeJet Pro 8745 All-in-One Printer / HP OfficeJet Pro 8746 All-in-One Printer / HP OfficeJet Pro 8747All-in-One Printer / HP OfficeJet Managed MFP P27724dw |
| **Regulatory Model Number:**[1)] | SNPRC-1602-02 |
| **Product Options:** | All |
| **Power Adapter:** | E3E01-60132 / E3E01-60079 (For China and India only) / E3E01-60078 (For Korea only) |
| **Radio Module Number:** | SDGOB-1392 |
| **Accessories:** | HP OfficeJet Pro 8700 250-sht input tray (J7A30A /K7S44A) |

**conforms to the following Product Specifications and Regulations:**

| | |
|---|---|
| **EMC:** | CISPR22:2008 / EN55022:2010 Class B<br>CISPR24:2010 / EN55024:2010<br>EN 61000-3-2:2014<br>EN 61000-3-3:2013<br>FCC CFR 47 Part 15 Class B<br>ICES – 003, Issue 5 Class B |
| **Safety:** | IEC 60950-1:2005(2nd Edition) +A1:2009+A2:2013<br>EN 60950-1:2006 +A11:2009 +A1:2010 +A12:2011+A2:2013<br>EN 62479:2010 |
| **Telecom:** | EN 301 489-1 V1.9.2:2011/EN 301 489-17 V2.2.1:2012<br>EN 300 328 V1.8.1:2012<br>EN 62311:2008<br>FCC Rules and Regulations 47 CFR Part 68<br>TIA-968-B Telecommunications -Telephone Terminal Equipment Technical Requirements for Connection of Terminal Equipment to Telephone Network (Sep 2009)<br>ES 203 021 -2/-3 V2.1.2<br>CS-03, Part 1, Issue 9, Amendment 4, December 2010 |
| **Energy:** | Regulation (EC) No. 1275/2008<br>ENERGY STAR® Qualified Imaging Equipment Operational Mode (OM) Test Procedure<br>EN 50564:2011<br>IEC 62301:2011 |
| **RoHS:** | EN 50581: 2012 |

The product herewith complies with the requirements of the Low Voltage Directive 2006/95/EC,the EMC Directive 2004/108/EC, the R&TTE Directive 1999/5/EC, the Ecodesign Directive 2009/125/EC, RoHS Directive 2011/65/EU, and carries the CE marking accordingly.

This device complies with part 15 of the FCC Rules. Operation is subject to the following two conditions:
(1) This device may not cause harmful interference, and (2) this device must accept any interference received, including interference that may cause undesired operation.

**Additional Information:**

1) This product is assigned a Regulatory Model Number which stays with the regulatory aspects of the design. The Regulatory Model Number is the main product identifier in the regulatorydocumentationand test reports,thisnumber should not be confused with the marketing name or the product numbers.
2) The product was tested in a typical configuration.
3) The internal power adapter E3E01-60079 is for India and China market only, while internal power adaptor E3E01-60078 is for Korea market only.
4) WIFI module operates only in 2.4 GHz band within this product.

Singapore
20 November 2015

Yik Hou Meng
Product Regulations Manager
HP Singapore Inkjet Printing Solutions

**Local contact for regulatory topics only:**

EU: HP Deutschland GmbH, HQ-TRE, Schickardstrasse 32, 71034 Boeblingen, Germany
U.S.: HP Inc,1501Page Mill Road,Palo Alto, CA 94304, U.S.A. 650-857-1501

www.hp.eu/certificates

## Regulatory information for wireless products

This section contains the following regulatory information pertaining to wireless products:


- Exposure to radio frequency radiation
- Notice to users in Brazil
- Notice to users in Canada
- Notice to users in Taiwan
- Notice to users in Mexico
- Notice to users in Japan
- Notice to users in Korea


### Exposure to radio frequency radiation

**Exposure to radio frequency radiation**

**Caution** The radiated output power of this device is far below the FCC radio frequency exposure limits. Nevertheless, the device shall be used in such a manner that the potential for human contact during normal operation is minimized. This product and any attached external antenna, if supported, shall be placed in such a manner to minimize the potential for human contact during normal operation. In order to avoid the possibility of exceeding the FCC radio frequency exposure limits, human proximity to the antenna shall not be less than 20 cm (8 inches) during normal operation.

### Notice to users in Brazil

**Aviso aos usuários no Brasil**

Este equipamento opera em caráter secundário, isto é, não tem direito à proteção contra interferência prejudicial, mesmo de estações do mesmo tipo, e não pode causar interferência a sistemas operando em caráter primário.

## Notice to users in Canada

### Notice to users in Canada/Note à l'attention des utilisateurs canadiens

Under Industry Canada regulations, this radio transmitter may only operate using an antenna of a type and maximum (or lesser) gain approved for the transmitter by Industry Canada. To reduce potential radio interference to other users, the antenna type and its gain should be so chosen that the equivalent isotropically radiated power (e.i.r.p.) is not more than that necessary for successful communication.

This device complies with Industry Canada licence-exempt RSS standard(s). Operation is subject to the following two conditions: (1) this device may not cause interference, and (2) this device must accept any interference, including interference that may cause undesired operation of the device.

WARNING! Exposure to Radio Frequency Radiation The radiated output power of this device is below the Industry Canada radio frequency exposure limits. Nevertheless, the device should be used in such a manner that the potential for human contact is minimized during normal operation.

To avoid the possibility of exceeding the Industry Canada radio frequency exposure limits, human proximity to the antennas should not be less than 20 cm (8 inches).

Conformément au Règlement d'Industrie Canada, cet émetteur radioélectrique ne peut fonctionner qu'avec une antenne d'un type et d'un gain maximum (ou moindre) approuvé par Industrie Canada. Afin de réduire le brouillage radioélectrique potentiel pour d'autres utilisateurs, le type d'antenne et son gain doivent être choisis de manière à ce que la puissance isotrope rayonnée équivalente (p.i.r.e.) ne dépasse pas celle nécessaire à une communication réussie.

Cet appareil est conforme aux normes RSS exemptes de licence d'Industrie Canada. Son fonctionnement dépend des deux conditions suivantes : (1) cet appareil ne doit pas provoquer d'interférences nuisibles et (2) doit accepter toutes interférences reçues, y compris des interférences pouvant provoquer un fonctionnement non souhaité de l'appareil.

AVERTISSEMENT relatif à l'exposition aux radiofréquences. La puissance de rayonnement de cet appareil se trouve sous les limites d'exposition de radiofréquences d'Industrie Canada. Néanmoins, cet appareil doit être utilisé de telle sorte qu'il soit mis en contact le moins possible avec le corps humain.

Afin d'éviter le dépassement éventuel des limites d'exposition aux radiofréquences d'Industrie Canada, il est recommandé de maintenir une distance de plus de 20 cm entre les antennes et l'utilisateur.

## Notice to users in Taiwan

### 低功率電波輻射性電機管理辦法

**第十二條**

經型式認證合格之低功率射頻電機，非經許可，公司、商號或使用者均不得擅自變更頻率、加大功率或變更設計之特性及功能。

**第十四條**

低功率射頻電機之使用不得影響飛航安全及干擾合法通信；經發現有干擾現象時，應立即停用，並改善至無干擾時方得繼續使用。

前項合法通信，指依電信法規定作業之無線電通信。低功率射頻電機須忍受合法通信或工業、科學及醫藥用電波輻射性電機設備之干擾。

### Notice to users in Mexico

**Aviso para los usuarios de México**

La operación de este equipo está sujeta a las siguientes dos condiciones: (1) es posible que este equipo o dispositivo no cause interferencia perjudicial y (2) este equipo o dispositivo debe aceptar cualquier interferencia, incluyendo la que pueda causar su operación no deseada.
Para saber el modelo de la tarjeta inalámbrica utilizada, revise la etiqueta regulatoria de la impresora.

### Notice to users in Japan

この機器は技術基準適合証明又は工事設計認証を受けた無線設備を搭載しています。

### Notice to users in Korea

해당 무선설비는 전파혼신 가능성이 있으므로 인명안전과 관련된 서비스는 할 수 없음

# Environmental product stewardship program

HP is committed to providing quality products in an environmentally sound manner. Design for recycling has been incorporated into this product. The number of materials has been kept to a minimum while ensuring proper functionality and reliability. Dissimilar materials have been designed to separate easily. Fasteners and other connections are easy to locate, access, and remove using common tools. High priority parts have been designed to access quickly for efficient disassembly and repair. For more information, visit HP's Commitment to the Environment website at:

www.hp.com/hpinfo/globalcitizenship/environment

- Eco-Tips
- European Union Commission Regulation 1275/2008
- Paper
- Plastics
- Material safety data sheets
- Recycling program
- HP inkjet supplies recycling program
- Power consumption
- Disposal of waste equipment by users
- Chemical substances
- Restriction of hazardous substance (Ukraine)
- Restriction of hazardous substance (India)
- China SEPA Eco Label User Information
- China Energy Label for Printer, Fax and Copier

- The Table of Hazardous Substances/Elements and their Content (China)
- EPEAT
- Battery disposal in Taiwan
- California Perchlorate Material Notice
- EU Battery Directive
- Battery notice for Brazil

## Eco-Tips

HP is committed to helping customers reduce their environmental footprint. Please visit the HP Environmental Programs and Initiatives website for more information on HP's environmental initiatives.

www.hp.com/hpinfo/globalcitizenship/environment/

## European Union Commission Regulation 1275/2008

For product power data, including the power consumption of the product in networked standby if all wired network ports are connected and all wireless network ports are activated, please refer to section P14 'Additional Information' of the product IT ECO Declaration at www.hp.com/hpinfo/globalcitizenship/environment/productdata/itecodesktop-pc.html.

## Paper

This product is suited for the use of recycled paper according to DIN 19309 and EN 12281:2002.

## Plastics

Plastic parts over 25 grams are marked according to international standards that enhance the ability to identify plastics for recycling purposes at the end of product life.

## Material safety data sheets

Material safety data sheets (MSDS) can be obtained from the HP website at:

www.hp.com/go/msds

## Recycling program

HP offers an increasing number of product return and recycling programs in many countries/regions, and partners with some of the largest electronic recycling centers throughout the world. HP conserves resources by reselling some of its most popular products. For more information regarding recycling of HP products, please visit:

www.hp.com/recycle

## HP inkjet supplies recycling program

HP is committed to protecting the environment. The HP Inkjet Supplies Recycling Program is available in many countries/regions, and lets you recycle used print cartridges and ink cartridges free of charge. For more information, go to the following website:

www.hp.com/hpinfo/globalcitizenship/environment/recycle/

## Power consumption

HP printing and imaging equipment marked with the ENERGY STAR® logo is certified by the U.S. Environmental Protection Agency. The following mark will appear on ENERGY STAR certified imaging products:

Additional ENERGY STAR certified imaging product model information is listed at: www.hp.com/go/energystar

## Disposal of waste equipment by users



This symbol means do not dispose of your product with your other household waste. Instead, you should protect human health and the environment by handing over your waste equipment to a designated collection point for the recycling of waste electrical and electronic equipment. For more information, please contact your household waste disposal service, or go to http://www.hp.com/recycle.

## Chemical substances

HP is committed to providing our customers with information about the chemical substances in our products as needed to comply with legal requirements such as REACH *(Regulation EC No 1907/2006 of the European Parliament and the Council)*. A chemical information report for this product can be found at: www.hp.com/go/reach.

## Restriction of hazardous substance (Ukraine)

**Технічний регламент щодо обмеження використання небезпечних речовин (Україна)**

Обладнання відповідає вимогам Технічного регламенту щодо обмеження використання деяких небезпечних речовин в електричному та електронному обладнанні, затвердженого постановою Кабінету Міністрів України від 3 грудня 2008 № 1057

## Restriction of hazardous substance (India)

**Restriction of hazardous substances (India)**

This product complies with the "India E-waste (Management and Handling) Rule 2011" and prohibits use of lead, mercury, hexavalent chromium, polybrominated biphenyls or polybrominated diphenyl ethers in concentrations exceeding 0.1 weight % and 0.01 weight % for cadmium, except for the exemptions set in Schedule 2 of the Rule.

## China SEPA Eco Label User Information

**中国环境标识认证产品用户说明**

噪声大于63.0Db(A)的办公设备不宜放置于办公室内，请在独立的隔离区域使用。

如需长时间使用本产品或打印大量文件，请确保在通风良好的房间内使用。

如您需要确认本产品处于零能耗状态，请按下电源关闭按钮，并将插头从电源插座断开。

您可以使用再生纸，以减少资源耗费。

## China Energy Label for Printer, Fax and Copier

# 复印机、打印机和传真机能源效率标识实施规则

依据“复印机、打印机和传真机能源效率标识实施规则”，该打印机具有中国能效标识。标识上显示的能效等级和操作模式值根据“复印机、打印机和传真机能效限定值及能效等级”标准（“GB 21521”）来确定和计算。

1. 能效等级

产品能效等级分为 3 级，其中 1 级能效最高。能效限定值根据产品类型和打印速度由标准确定。能效等级则根据基本功耗水平以及网络接口和内存等附加组件和功能的功率因子之和来计算。

2. 能效信息

喷墨打印机

- 操作模式功率
  睡眠状态的能耗按照 GB 21521 标准来衡量和计算。该数据以瓦特 (W) 表示。
- 待机功率
  待机状态是产品连接到电网电源上功率最低的状态。该状态可以延续无限长时间，且使用者无法改变此状态下产品的功率。对于“成像设备”产品，“待机”状态通常相当于“关闭”状态，但也可能相当于“准备”状态或“睡眠”状态。该数据以瓦特 (W) 表示。
- 睡眠状态预设延迟时间
  出厂前由制造商设置的时间决定了该产品在完成主功能后进入低耗模式（例如睡眠、自动关机）的时间。该数据以分钟表示。
- 附加功能功率因子之和
  网络接口和内存等附加功能的功率因子之和。该数据以瓦特 (W) 表示。

标识上显示的能耗数据是根据典型配置测量得出的数据，此类配置包含登记备案的打印机依据复印机、打印机和传真机能源效率标识实施规则所选的所有配置。因此，该特定产品型号的实际能耗可能与标识上显示的数据有所不同。

要了解规范的更多详情，请参考最新版的 GB 21521 标准。

## The Table of Hazardous Substances/Elements and their Content (China)

**产品中有害物质或元素的名称及含量**
**根据中国《电子信息产品污染控制管理办法》**

| 部件名称 | 有害物质或元素 | | | | | |
|---|---|---|---|---|---|---|
| | 铅 (Pb) | 汞 (Hg) | 镉 (Cd) | 六价铬 (Cr(VI)) | 多溴联苯 (PBB) | 多溴二苯醚 (PBDE) |
| 外壳和托盘 | O | O | O | O | O | O |
| 电线 | O | O | O | O | O | O |
| 印刷电路板 | X | O | O | O | O | O |
| 打印系统 | X | O | O | O | O | O |
| 显示器 | X | O | O | O | O | O |
| 喷墨打印机墨盒 | O | O | O | O | O | O |
| 驱动光盘 | X | O | O | O | O | O |
| 扫描仪 | X | X | O | O | O | O |
| 网络配件 | X | O | O | O | O | O |
| 电池板 | X | O | O | O | O | O |
| 自动双面打印系统 | O | O | O | O | O | O |
| 外部电源 | X | O | O | O | O | O |

本表格依据SJ/T 11364 的规定编制。
O：表示该有害物质在该部件所有均质材料中的含量均在GB/T 26572 规定的限量要求以下。
X：表示该有害物质至少在该部件的某一均质材料中的含量超出GB/T 26572 规定的限量要求。

此表中所有名称中含 “X” 的部件均符合欧盟 RoHS 立法。

注：环保使用期限的参考标识取决于产品正常工作的温度和湿度等条件。

## EPEAT

**EPEAT**

Most HP products are designed to meet EPEAT. EPEAT is a comprehensive environmental rating that helps identify greener electronics equipment. For more information on EPEAT go to **www.epeat.net**. For information on HP's EPEAT registered products go to **www.hp.com/hpinfo/globalcitizenship/environment/pdf/epeat_printers.pdf**.

## Battery disposal in Taiwan



廢電池請回收

## California Perchlorate Material Notice

### California Perchlorate Material Notice

Perchlorate material - special handling may apply. See:
http://www.dtsc.ca.gov/hazardouswaste/perchlorate/

This product's real-time clock battery or coin cell battery may contain perchlorate and may require special handling when recycled or disposed of in California.

# EU Battery Directive



English

**European Union Battery Directive**
This product contains a battery that is used to maintain data integrity of real time clock or product settings and is designed to last the life of the product. Any attempt to service or replace this battery should be performed by a qualified service technician.

Français

**Directive sur les batteries de l'Union Européenne**
Ce produit contient une batterie qui permet de maintenir l'intégrité des données pour les paramètres du produit ou l'horloge en temps réel et qui a été conçue pour durer aussi longtemps que le produit. Toute tentative de réparation ou de remplacement de cette batterie doit être effectuée par un technicien qualifié.

Deutsch

**Batterie-Richtlinie der Europäischen Union**
Dieses Produkt enthält eine Batterie, die dazu dient, die Datenintegrität der Echtzeituhr sowie der Produkteinstellungen zu erhalten, und die für die Lebensdauer des Produkts ausreicht. Im Bedarfsfall sollte das Instandhalten bzw. Austauschen der Batterie von einem qualifizierten Servicetechniker durchgeführt werden.

Italiano

**Direttiva dell'Unione Europea relativa alla raccolta, al trattamento e allo smaltimento di batterie e accumulatori**
Questo prodotto contiene una batteria utilizzata per preservare l'integrità dei dati dell'orologio in tempo reale o delle impostazioni del prodotto e la sua durata si intende pari a quella del prodotto. Eventuali interventi di riparazione o sostituzione della batteria devono essere eseguiti da un tecnico dell'assistenza qualificato.

Español

**Directiva sobre baterías de la Unión Europea**
Este producto contiene una batería que se utiliza para conservar la integridad de los datos del reloj de tiempo real o la configuración del producto y está diseñada para durar toda la vida útil del producto. El mantenimiento o la sustitución de dicha batería deberá realizarla un técnico de mantenimiento cualificado.

Čeština

**Směrnice Evropské unie pro nakládání s bateriemi**
Tento výrobek obsahuje baterii, která slouží k uchování správných dat hodin reálného času nebo nastavení výrobku. Baterie je navržena tak, aby vydržela celou životnost výrobku. Jakýkoliv pokus o opravu nebo výměnu baterie by měl provést kvalifikovaný servisní technik.

Dansk

**EU's batteridirektiv**
Produktet indeholder et batteri, som bruges til at vedligeholde dataintegriteten for realtidsur- eller produktindstillinger og er beregnet til at holde i hele produktets levetid. Service på batteriet eller udskiftning bør foretages af en uddannet servicetekniker.

Nederlands

**Richtlijn batterijen voor de Europese Unie**
Dit product bevat een batterij die wordt gebruikt voor een juiste tijdsaanduiding van de klok en het behoud van de productinstellingen. Bovendien is deze ontworpen om gedurende de levensduur van het product mee te gaan. Het onderhoud of de vervanging van deze batterij moet door een gekwalificeerde onderhoudstechnicus worden uitgevoerd.

Eesti

**Euroopa Liidu aku direktiiv**
Toode sisaldab akut, mida kasutatakse reaalaja kella andmeühtsuse või toote sätete säilitamiseks. Aku on valmistatud kestma terve toote kasutusaja. Akut tohib hooldada või vahetada ainult kvalifitseeritud hooldustehnik.

Suomi

**Euroopan unionin paristodirektiivi**
Tämä laite sisältää pariston, jota käytetään reaaliaikaisen kellon tietojen ja laitteen asetusten säilyttämiseen. Pariston on suunniteltu kestävän laitteen koko käyttöiän ajan. Pariston mahdollinen korjaus tai vaihto on jätettävä pätevän huoltohenkilön tehtäväksi.

Ελληνικά

**Οδηγία της Ευρωπαϊκής Ένωσης για τις ηλεκτρικές στήλες**
Αυτό το προϊόν περιλαμβάνει μια μπαταρία, η οποία χρησιμοποιείται για τη διατήρηση της ακεραιότητας των δεδομένων ρολογιού πραγματικού χρόνου ή των ρυθμίσεων προϊόντος και έχει σχεδιαστεί έτσι ώστε να διαρκέσει όσο και το προϊόν. Τυχόν απόπειρες επιδιόρθωσης ή αντικατάστασης αυτής της μπαταρίας θα πρέπει να πραγματοποιούνται από κατάλληλα εκπαιδευμένο τεχνικό.

Magyar

**Az Európai unió telepek és akkumulátorok direktívája**
A termék tartalmaz egy elemet, melynek feladata az, hogy biztosítsa a valós idejű óra vagy a termék beállításainak adatintegritását. Az elem úgy van tervezve, hogy végig kitartson a termék használata során. Az elem bármilyen javítását vagy cseréjét csak képzett szakember végezheti el.

Latviski

**Eiropas Savienības Bateriju direktīva**
Produktam ir baterija, ko izmanto reāla laika pulksteņa vai produkta iestatījumu datu integritātes saglabāšanai, un tā ir paredzēta visam produkta dzīves ciklam. Jebkura apkope vai baterijas nomaiņa ir jāveic atbilstoši kvalificētam darbiniekam.

Lietuviškai

**Europos Sąjungos baterijų ir akumuliatorių direktyva**
Šiame gaminyje yra baterija, kuri naudojama, kad būtų galima prižiūrėti realaus laiko laikrodžio veikimą arba gaminio nuostatas; ji skirta veikti visą gaminio eksploatavimo laiką. Bet kokius šios baterijos aptarnavimo arba keitimo darbus turi atlikti kvalifikuotas aptarnavimo technikas.

Polski

**Dyrektywa Unii Europejskiej w sprawie baterii i akumulatorów**
Produkt zawiera baterię wykorzystywaną do zachowania integralności danych zegara czasu rzeczywistego lub ustawień produktu, która podtrzymuje działanie produktu. Przegląd lub wymiana baterii powinny być wykonywane wyłącznie przez uprawnionego technika serwisu.

Português

**Diretiva sobre baterias da União Européia**
Este produto contém uma bateria que é usada para manter a integridade dos dados do relógio em tempo real ou das configurações do produto e é projetada para ter a mesma duração que este. Qualquer tentativa de consertar ou substituir essa bateria deve ser realizada por um técnico qualificado.

Slovenčina

**Smernica Európskej únie pre zaobchádzanie s batériami**
Tento výrobok obsahuje batériu, ktorá slúži na uchovanie správnych údajov hodín reálneho času alebo nastavení výrobku. Batéria je skonštruovaná tak, aby vydržala celú životnosť výrobku. Akýkoľvek pokus o opravu alebo výmenu batérie by mal vykonať kvalifikovaný servisný technik.

Slovenščina

**Direktiva Evropske unije o baterijah in akumulatorjih**
V tem izdelku je baterija, ki zagotavlja natančnost podatkov ure v realnem času ali nastavitev izdelka v celotni življenjski dobi izdelka. Kakršno koli popravilo ali zamenjavo te baterije lahko izvede le pooblaščeni tehnik.

Svenska

**EU:s batteridirektiv**
Produkten innehåller ett batteri som används för att upprätthålla data i realtidsklockan och produktinställningarna. Batteriet ska räcka produktens hela livslängd. Endast kvalificerade servicetekniker får utföra service på batteriet och byta ut det.

Български

**Директива за батерии на Европейския съюз**
Този продукт съдържа батерия, която се използва за поддържане на целостта на данните на часовника в реално време или настройките за продукта, създадена издържи през целия живот на продукта. Сервизът или замяната на батерията трябва да се извършва от квалифициран техник.

Română

**Directiva Uniunii Europene referitoare la baterii**
Acest produs conține o baterie care este utilizată pentru a menține integritatea datelor ceasului de timp real sau setărilor produsului și care este proiectată să funcționeze pe întreaga durată de viață a produsului. Orice lucrare de service sau de înlocuire a acestei baterii trebuie efectuată de un tehnician de service calificat.

## Battery notice for Brazil

A bateria deste equipamento não foi projetada para ser removida pelo cliente.

# B Errors (Windows)


- Printhead problem
- Cartridge problem
- Replace the cartridge
- Paper mismatch
- Cartridge carriage stalled
- Paper jam
- Out of paper
- Document failed to print
- Printer failure
- Door or cover open
- Cartridges depleted
- Cartridge failure
- Printer supply upgrade problem
- Non-HP cartridges installed
- Use SETUP cartridges
- Do not use SETUP cartridges
- Not enough ink at startup
- Incompatible HP Instant Ink cartridge
- Ink sensor failure
- Ink sensor warning
- Problem with ink system
- Incompatible cartridges
- Please Connect Printer to HP Connected


## Printhead problem

The printhead is missing, not detected, incorrectly installed, or incompatible.

If this error occurs at printer setup, try the following solutions:

- Reinstall the printhead.

  For more information, see Maintain the printhead and cartridges.

**CAUTION:** The printheads contain electrical contacts that can be damaged easily.

If this error occurs after the printer has been used for a period of time, try the following solutions:

- Turn the printer off and on.

  Turn off the printer, and then turn it on again by pressing  (the Power button).

  If the problem persists, contact HP support for service or replacement. For more information, see HP support.

# Cartridge problem

The cartridge identified in the message is missing or damaged.

To solve this problem, try the following solutions. Solutions are listed in order, with the most likely solution first. If the first solution does not solve the problem, continue trying the remaining solutions until the issue is resolved.

**Solution 1: Turn the printer off and on**

Turn off the printer, and then turn it on again.

If the problem persists, try the next solution.

**Solution 2: Install the cartridge correctly**

Remove the indicated cartridge, and then reinsert it. For more information, see Replace the cartridges.

# Replace the cartridge

Replace the indicated cartridge. For more information, see Replace the cartridges.

**NOTE:** If your cartridge is still under warranty, contact HP support for service or replacement. If the problem persists after you replace the cartridge, contact HP support. For more information, see HP support.

# Paper mismatch

The paper size or type selected in the printer driver does not match the paper loaded in the printer. Make sure that the correct paper is loaded in the printer, and then print the document again. For more information, see Load paper.

**NOTE:** If the paper loaded in the printer is the correct size, change the selected paper size in the printer driver, and then print the document again.

# Cartridge carriage stalled

Something is blocking the carriage (the part of the printer that holds the cartridges).

To clear the obstruction, check the printer for jams. For more information, see Jams and paper-feed issues.

# Paper jam

Paper has become jammed in the printer.

Before you try to clear the jam, check the following:

- Make sure that you have loaded paper that meets specifications and is not wrinkled, folded, or damaged. For more information, see Recommended papers for printing.
- Make sure that the printer is clean. For more information, see Maintain the printer.
- Make sure that the trays are loaded correctly and are not too full. For more information, see Load paper.

For instructions on clearing jams, as well as more information about how to avoid jams, see Jams and paper-feed issues.

# Out of paper

The default tray is empty.

Load more paper, and then touch **OK** .

For more information, see Load paper.

# Document failed to print

The printer could not print the document because a problem occurred in the printing system.

For information about solving printing problems, see Printer hardware issues.

# Printer failure

There was a problem with the printer. Usually, you can resolve such problems by completing the following steps:

1. Press (the Power button) to turn off the printer.
2. Unplug the power cord, and then plug in the power cord again.
3. Press (the Power button) to turn on the printer.

If this problem persists, write down the error code provided in the message, and then contact HP support. For more information about contacting HP support, see HP support.

# Door or cover open

Before the printer can print documents, all doors and covers must be closed.

**TIP:** When completely closed, most doors and covers snap into place.

If the problem persists after you've securely closed all doors and covers, contact HP support. For more information, see HP support.

# Cartridges depleted

The cartridges listed in the message must be replaced to resume printing. HP recommends that you do not remove a cartridge until a replacement is ready to install.

For more information, see Replace the cartridges.

# Cartridge failure

The cartridges listed in the message are damaged or have failed.

See Replace the cartridges.

# Printer supply upgrade problem

The supply upgrade was not successful. The cartridges listed in the message can still be used in this printer. Replace the Supply Upgrade cartridge. For more information, see Replace the cartridges.

# Non-HP cartridges installed

HP cannot guarantee the quality or reliability of non-HP supplies. Printer service or repairs required as a result of using a non-HP supply will not be covered under warranty. If you believe you purchased Genuine HP cartridges, visit HP at www.hp.com/go/anticounterfeit for more information or to report fraud.

# Use SETUP cartridges

When you first setup the printer, you must install the cartridges that shipped in the box with the printer. These cartridges are labeled SETUP, and they calibrate your printer before the first print job. Failure to install the SETUP cartridges during the initial product setup causes an error. If you installed a set of regular cartridges, remove them and install the SETUP cartridges to complete printer setup. After printer setup is complete, the printer can use regular cartridges.

if you still receive error messages and the printer cannot complete ink system initialization, contact HP support. For more information, see HP support.

# Do not use SETUP cartridges

SETUP cartridges cannot be used after the printer has been initialized. Remove and install non-SETUP cartridges. For more information, see Replace the cartridges.

# Not enough ink at startup

The used cartridges listed in the message might not have enough ink to complete one-time startup processes.

Solution: Install new cartridges or click **OK** to use installed cartridges.

If startup cannot complete with installed cartridges, new cartridges will be needed. For information on how to install new cartridges, see Replace the cartridges.

# Incompatible HP Instant Ink cartridge

The cartridge is not compatible with your printer.

This error can occur if you install an HP Instant Ink cartridge into a printer that has not been enrolled in the HP Instant Ink program. It can also occur if the HP Instant Ink cartridge was previously used in a different printer enrolled in the HP Instant Ink program.

Visit the HP Instant Ink program website for more information.

## Ink sensor failure

The ink sensor has failed and the printer can no longer print.

Contact HP support. For more information, see www.support.hp.com .

## Ink sensor warning

The ink sensor is reporting an unexpected condition. This could be caused by the cartridge, or the sensor may have failed. If the sensor has failed, it can no longer sense when your cartridges are out of ink. Printing with an empty cartridge will cause air to enter the ink system, which causes poor print quality. Significant amounts of ink will be used up to recover from this condition, which will deplete much of the ink supply for all cartridges.

Solution: Click **OK** to continue printing or replace the cartridge. For information about how to install new cartridges, see Replace the cartridges.

## Problem with ink system

Please remove the cartridges and examine them for any sign of leaks. If any cartridges have leaks, contact HP support. Do not use cartridges that are leaking.

If there are no leaks, re-install cartridges and close the printer cover. Turn the printer off then on again. If you get this message a second time, contact HP support.

For more information about contacting HP support, see HP support.

## Incompatible cartridges

The cartridge is not compatible with your printer.

Solution: Remove the cartridge and replace with a compatible cartridge. For information about how to install new cartridge, see Replace the cartridges.

## Please Connect Printer to HP Connected

The printer must be connected to HP Connected (www.hpconnected.com). This site might not be available in all countries/regions. Otherwise, you will be unable to print soon without further warning. See the printer control panel for instructions on connecting, or visit the HP Instant Ink program website for more information.

# Index


**A**
accessibility 2
accessories
  setup 27
ADSL, fax setup with
  parallel phone systems 73
align printhead 144
answer ring pattern
  change 63
  parallel phone systems 75
answering machine
  fax tones recorded 137
  set up with fax (parallel phone systems) 84
  set up with fax and modem 85
automatic fax reduction 57

**B**
backup fax 56
baud rate 65
black and white pages
  fax 51
blocked fax numbers
  set up 58
both sides, print on 37
broadcast faxing
  send 54
buttons, control panel 7

**C**
carriage
  clear carriage jams 119
cartridge access door, locating 6
Cartridges 6
cartridges 100
  check ink levels 98
  locating 6
  replace 98
  tips 97
clean
  document feeder 143
  exterior 143
  printhead 144, 145
  scanner glass 142
clear
  fax logs 68
colored text, and OCR 47
computer modem
  shared with fax (parallel phone systems) 78
  shared with fax and answering machine (parallel phone systems) 85
  shared with fax and voice line (parallel phone systems) 81
  shared with fax and voice mail (parallel phone systems) 89
confirmation reports, fax 67
connectors, locating 6
control panel
  buttons 7
  lights 7
  status icons 8
copy
  specifications 149
correct port test, fax 131
customer support
  warranty 147

**D**
diagnostic page 141
dial tone test, failure 132
dial type, setting 64
dial-up modem
  shared with fax (parallel phone systems) 78
  shared with fax and answering machine (parallel phone systems) 85
  shared with fax and voice line (parallel phone systems) 81
  shared with fax and voice mail (parallel phone systems) 89
distinctive ringing
  change 63
  parallel phone systems 75
document feeder
  clean 143
  feeding problems, troubleshoot 143
  load originals 26
double-sided printing 37
DSL, fax setup with
  parallel phone systems 73

**E**
ECM. *See* error correction mode
edit
  text in OCR program 47
embedded web server
  about 109
  opening 110
  troubleshoot, cannot be opened 111
  Webscan 46
environmental specifications 148
environmental sustainability program 160
error correction mode 54
error reports, fax 68
EWS. *See* embedded web server

**F**
fax
  answer mode 63
  answering machine and modem, shared with (parallel phone systems) 85
  answering machine troubleshoot 137
  answering machine, set up (parallel phone systems) 84
  auto answer 63
  backup fax 56
  blocking numbers 58
  confirmation reports 67
  dial tone test, failed 132
  dial type, setting 64
  distinctive ringing setup (parallel phone systems) 75
  distinctive ringing, change pattern 63

DSL, set up (parallel phone systems) 73
error correction mode 54
error reports 68
forwarding 57
header 62
Internet Protocol, over 66
ISDN line, set up (parallel phone systems) 74
line condition test, failed 133
log, clear 68
log, print 68
manual receive 55
modem and answering machine, shared with (parallel phone systems) 85
modem and voice line, shared with (parallel phone systems) 81
modem and voice mail, shared with (parallel phone systems) 89
modem, shared with (parallel phone systems) 78
monitor dialing 53, 54
parallel phone systems 70
PBX system, set up (parallel phone systems) 74
phone cord connection test, failed 131
phone cord type test, failed 132
print last transaction details 69
receive 55
receive, troubleshoot 134, 136
redial options 64
reduction 57
reports 67
reprint 56
rings to answer 63
send 51
send, troubleshoot 134, 137
separate line setup (parallel phone systems) 72
settings, change 62
setup types 71
shared phone line setup (parallel phone systems) 76
sound volume 65
specifications 149
speed 65
test failed 129
test setup 91
troubleshoot 129
voice mail, set up (parallel phone systems) 77
wall jack test, failed 130
FoIP 66
forwarding faxes 57

**G**

glass, scanner
clean 142
load originals 25
locating 5

**H**

hardware, fax setup test 130
header, fax 62
HP Utility (OS X)
opening 109
humidity specifications 148

**I**

ink cartridges
part numbers 100
ink level icons 8
ink levels, check 98
Internet Protocol
fax, using 66
IP address
checking for printer 111
IP settings 105
ISDN line, set up with fax
parallel phone systems 74

**J**

jams
clear 113
paper to avoid 19
junk fax mode 58

**L**

lights, control panel 7
line condition test, fax 133
link speed, setting 105
log, fax
print 68

**M**

Mac OS 32
maintain
page smear 144
printhead 144
maintenance
align printhead 144
check ink levels 98
clean 143
clean printhead 145
diagnostic page 141
printhead 144
replace cartridges 98
manual faxing
receive 55
send 52, 53
media
duplexing 37
memory
reprint faxes 56
save faxes 56
modem
shared with fax (parallel phone systems) 78
shared with fax and answering machine (parallel phone systems) 85
shared with fax and voice line (parallel phone systems) 81
shared with fax and voice mail (parallel phone systems) 89
monitor dialing 53, 54
multi-feeds, troubleshoot 120

**N**

networks
connector illustration 6
IP settings 105
link speed 105
settings, change 104
view and print settings 105
wireless communication setup 102
wireless settings 141

**O**

OCR
edit scanned documents 47
operating systems supported 148
OS X
HP Utility 109

output tray
locating 5

**P**

paper
clear jams 113
HP, order 18
load tray 19
selecting 18
skewed pages 120
specifications 149
troubleshoot feeding 120
paper-feed problems, troubleshoot 120
parallel phone systems
answering machine setup 84
countries/regions with 70
distinctive ringing setup 75
DSL setup 73
ISDN setup 74
modem and answering machine setup 85
modem and voice mail setup 89
modem setup 78
modem shared with voice line setup 81
PBX setup 74
separate line setup 72
setup types 71
shared line setup 76
PBX system, set up with fax
parallel phone systems 74
phone book
change contact 60
change group contacts 61
delete contacts 61
print list 62
send fax 51
set up 60
set up group contacts 61
phone cord
connected to correct port test failed 131
correct type test failed 132
phone line, answer ring pattern 63
phone, fax from
receive 55
send, 52
power
troubleshoot 139
power input, locating 6
print
diagnostic page 141
double-sided 37
fax logs 68
fax reports 67
faxes 56
last fax details 69
troubleshoot 139
Print brochures
print 32
print quality
clean page smear 144
print quality report 141
printer control panel
locating 5
network settings 104
send faxes 52
printer software (Windows)
about 109
opening 29, 109
printer status report
information on 140
printhead 144
clean 145
printhead, align 144
pulse dialing 64

**R**

radio interference
regulatory information 158
rear access panel
illustration 6
receive faxes
auto answer mode 63
automatically 55
blocking numbers 58
forwarding 57
manually 55
rings to answer 63
troubleshoot 134, 136
recycle
ink cartridges 161
redial options, setting 64
reduce fax 57
regulatory information 150, 158
regulatory model number 151
replace cartridges 98
reports
confirmation, fax 67
diagnostic 141
error, fax 68
fax test failed 129
web access 141
wireless test 141
reprint
faxes from memory 56
rings to answer 63

**S**

save
faxes in memory 56
scan
from Webscan 46
OCR 47
scan specifications 149
scanner glass
clean 142
load originals 25
locating 5
second tray
use Tray 2 27
send faxes
basic fax 51
from a phone 52
memory, from 53
monitor dialing 53, 54
troubleshoot 134, 137
send scans
for OCR 47
serial phone systems
countries/regions with 70
setup types 71
settings
network 104
speed, fax 65
volume, fax 65
setup
accessories 27
answering machine (parallel phone systems) 84
answering machine and modem (parallel phone systems) 85
computer modem (parallel phone systems) 78
computer modem and answering machine (parallel phone systems) 85
computer modem and voice line (parallel phone systems) 81

computer modem and voice mail (parallel phone systems) 89
distinctive ringing 63
distinctive ringing (parallel phone systems) 75
DSL (parallel phone systems) 73
fax scenarios 71
fax, with parallel phone systems 70
ISDN line (parallel phone systems) 74
PBX system (parallel phone systems) 74
separate fax line (parallel phone systems) 72
shared phone line (parallel phone systems) 76
test fax 91
voice mail (parallel phone systems) 77
voice mail and computer modem (parallel phone systems) 89
Setup icon 8
skew, troubleshoot
print 120
software
OCR 47
Webscan 46
specifications
paper 149
physical 148
system requirements 148
status
network configuration page 141
status icons 8
subscriber identification code 62
system requirements 148

**T**

technical information
copy specifications 149
fax specifications 149
scan specifications 149
telephone line, answer ring pattern 63
telephone wall jack, fax 130
telephone, fax from
receive 55
send 52
temperature specifications 148
tests, fax
dial tone, failed 132
failed 129
fax line condition 133
fax phone cord type test failed 132
hardware, failed 130
port connection, failed 131
setup 91
telephone wall jack 130
tone dialing 64
trays
clear paper jams 113
load paper 19
locating 5
paper-width guides illustration 5
troubleshoot feeding 120
troubleshoot
answering machines 137
control panel help system 140
embedded web server 111
fax 129
fax dial tone test failed 132
fax hardware test failed 130
fax line test failed 133
fax phone cord connection test failed 131
fax phone cord type test failed 132
fax tests 129
fax wall jack test, failed 130
multiple pages are picked 120
network configuration page 141
paper not picked up from tray 120
paper-feed problems 120
power 139
print 139
printer status report 140
receive faxes 134, 136
send faxes 134, 137
skewed pages 120
two-sided printing 37

**U**

USB connection
port, locating 5, 6

**V**

view
network settings 105
voice mail
set up with fax (parallel phone systems) 77
set up with fax and computer modem (parallel phone systems) 89
volume
fax sounds 65

**W**

wall jack test, fax 130
warranty 147
web access test report 141
Webscan 46
websites
accessibility information 2
environmental programs 160
Windows
print brochures 32
system requirements 148
wireless communication
regulatory information 158
set up 102
wireless connection icons 8
wireless test report 141

© Copyright 2016 HP Development Company, L.P.

