AP-305C FLASH

USER'S MANUAL



For video tutorials about your product(s), customer support, updated user manuals, and all other Altura Photo news please visit:

alturaphoto.com

FOREWORD

Thank you for purchasing this product.

This AP-305C camera flash applies to Canon series cameras and is compatible with TTL autoflash. With this TTL compatible flash, your shooting will become simpler. You can easily achieve a correct flash exposure even in complex light-changing environments. This camera flash features:

- GN 36 m. (ISO 100 ft)
- Fully supported Canon E-TTL/E-TTL II camera flash. Workable as Master or Slave unit in a wireless flash group.
- With built-in 2.4 GHz wireless remote system to support transmitting and receiving.

• Provides multiple functions including: manual flash, multi flash, HSS (up to 1/8000 s), second curtain sync, FEC, etc.

• Support with firmware upgrade.

WARNING

• Always keep this product dry. Do not use in rain or in damp conditions.

• Do not disassemble. Should repairs become necessary, this product must be sent to an authorized maintenance center.

• Keep out of reach of children.

• Stop using this product if it breaks open due to extrusion, falling or strong hit. Otherwise, electric shock may occur if you touch the electronic parts inside it.

• Do not fire the flash directly into the eyes (especially those of babies) within short distances. Otherwise visual impairment may occur.

• Do not use the flash unit in the presence of flammable gases, chemicals and other similar materials. In certain circumstance, these materials may be sensitive to the strong light emitting from this flash unit and fire or electromagnetic interference may result.

• Do not leave or store the flash unit if the ambient temperature reads over 50°C. Otherwise the electronic parts may be damaged.

• Turn off the flash unit immediately in the event of malfunction.

Altura Photo TTL Camera Flash
Conventions used in this Manual

- This manual is based on the assumption that both the camera and camera flash's power switches are powered on.
- Reference page numbers are indicated by "p.**".
- The following alert symbols are used in this manual:


The Caution symbol gives supplemental information.


The Note symbol indicates a warning to prevent shooting problem.

CONTENTS

1 Foreword

2 Warning

7 Nomenclature

14 Attaching to a Camera

15 Power Management

16 Flash Mode: TTL Autoflash

21 Flash Mode: Manual Flash

24 Flash Mode: Multi Stroboscopic Flash

29 Wireless Flash Shooting: Radio (2.4G) Transmission

CONTENTS

42 Other Applications

48 C. Fn: Setting Custom Functions

50 Protection Function

53 Firmware Upgrade

54 Technical Data

57 Troubleshooting

60 Compatible Camera Models

61 Maintenance

NOMENCLATURE

BODY

1. Catchlight Panel
2. Built-in Wide Panel
3. Flash Head
4. Optic Control Sensor
5. Focus Assist Beam
6. Lock Ring
7. Battery Compartment
8. Hotshoe

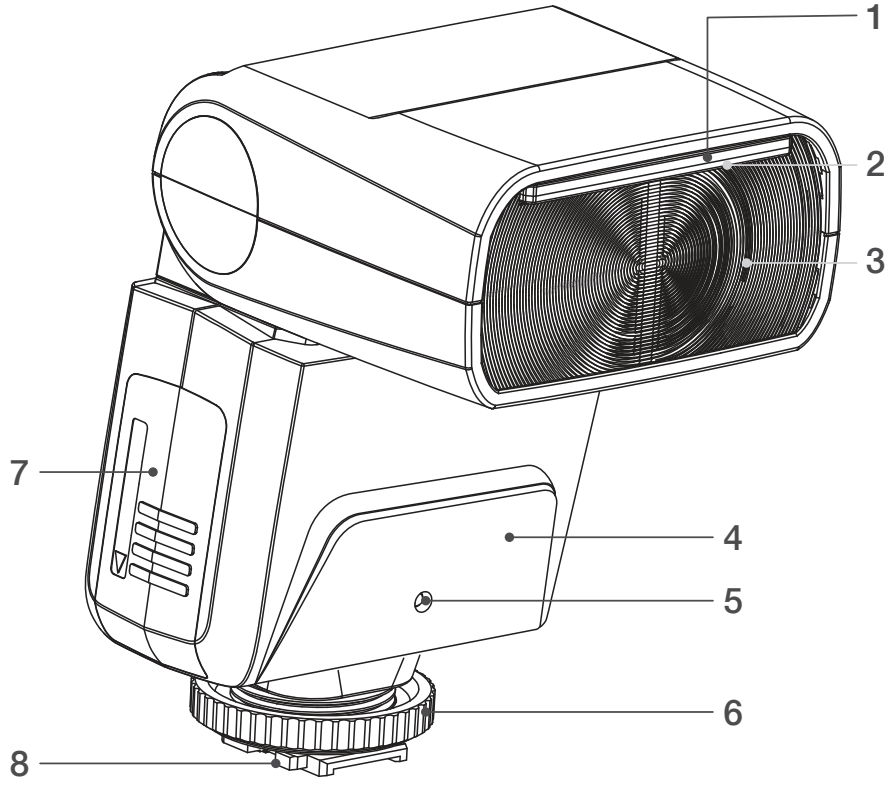

9. USB Port

10. LCD Panel

11. Mode selection button

12. Zoom selection button

13. High-Speed Sync button

14. S1/S2 optic slave triggering selection button (in non-wireless mode)

15. Power switch

16. Test button/Flash ready indicator

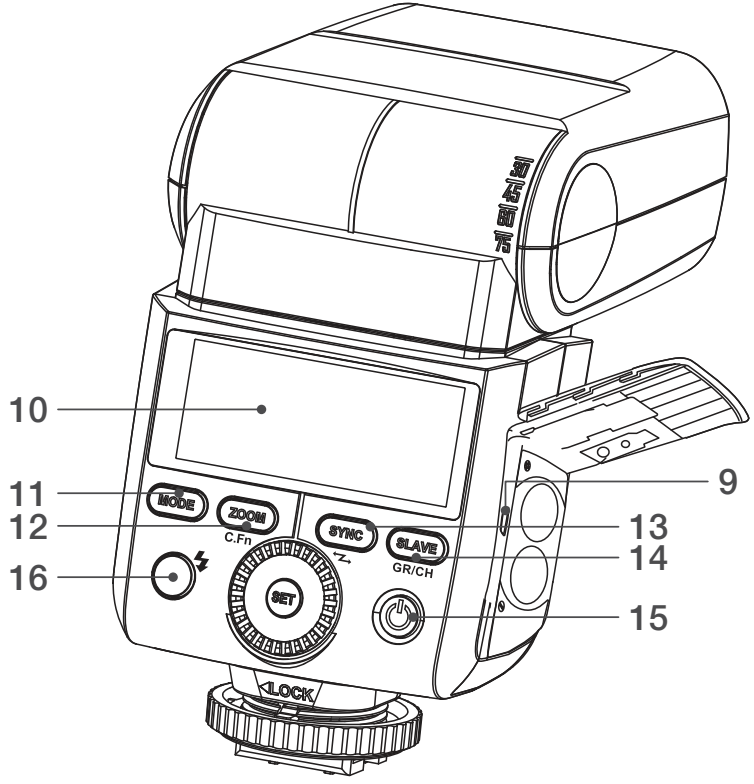

CONTROL PANEL

17. Custom function setting button (reusable button, long press for 2 seconds)

18. Wireless selection button (reusable button, long press for 2 seconds)

19. Group/Channel button (reusable button, long press for 2 seconds)

20. Select Dial

21. Set button

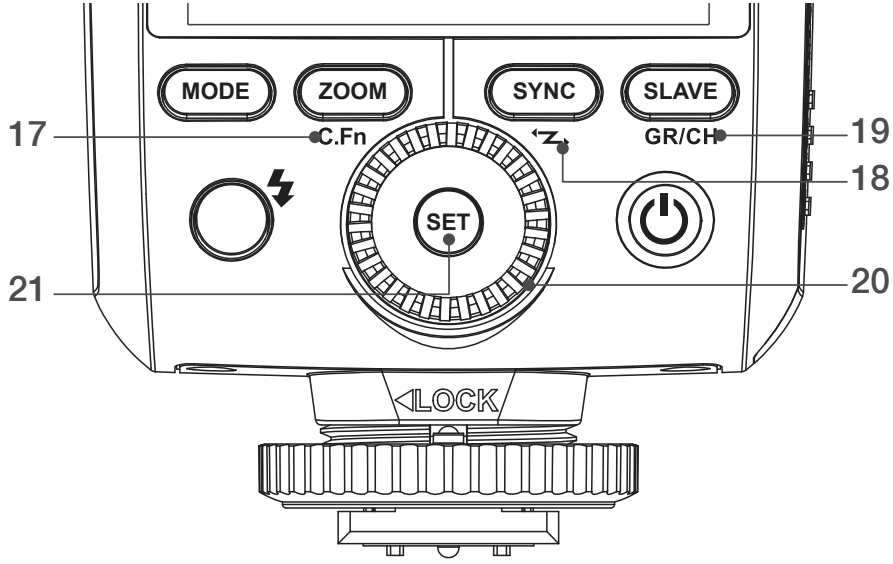

LCD PANEL

1. TTL Autoflash

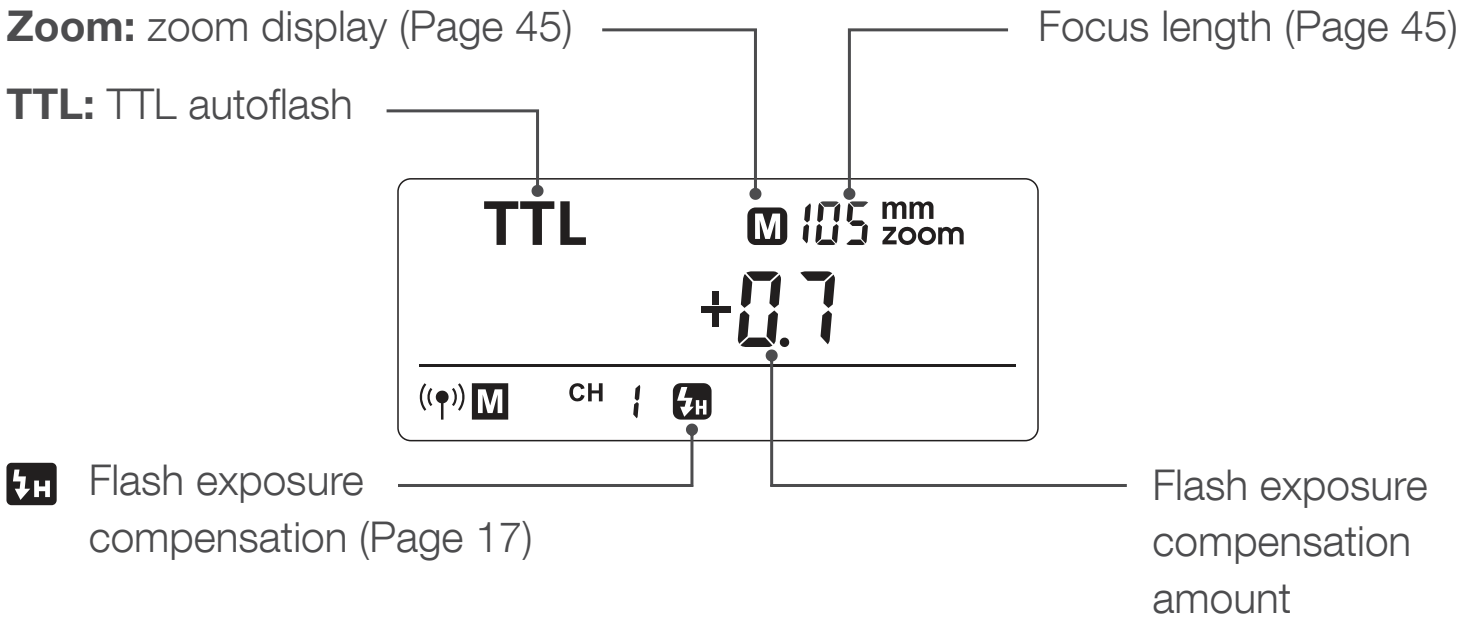

2. M Manual Flash

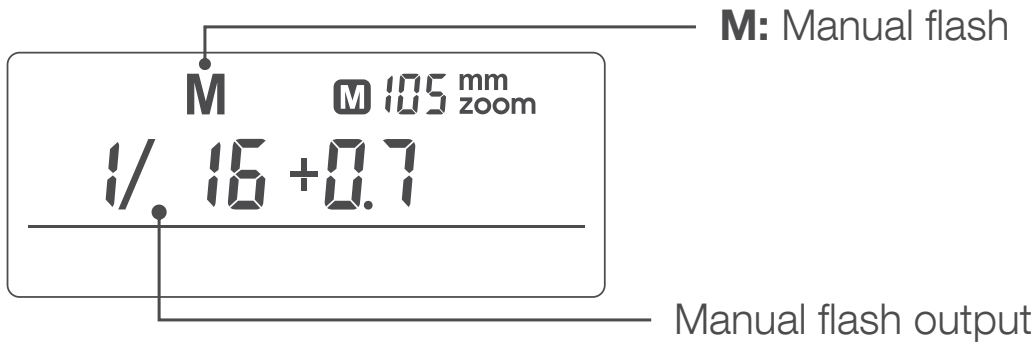

3. Multi Flash

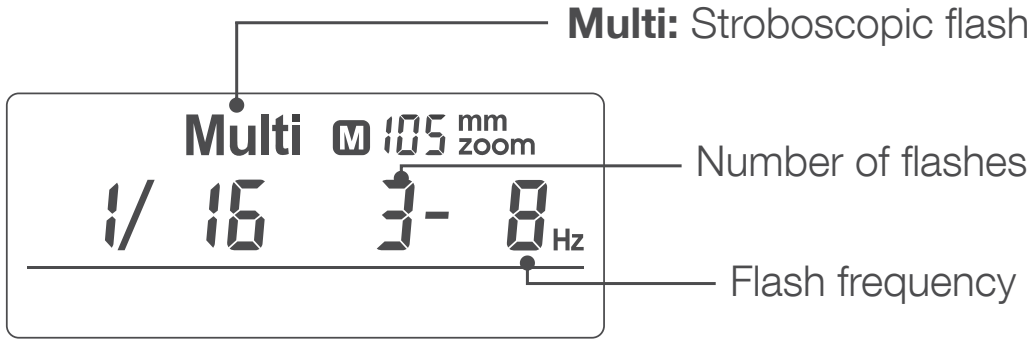

4. Radio transmission shooting

- **Master unit**

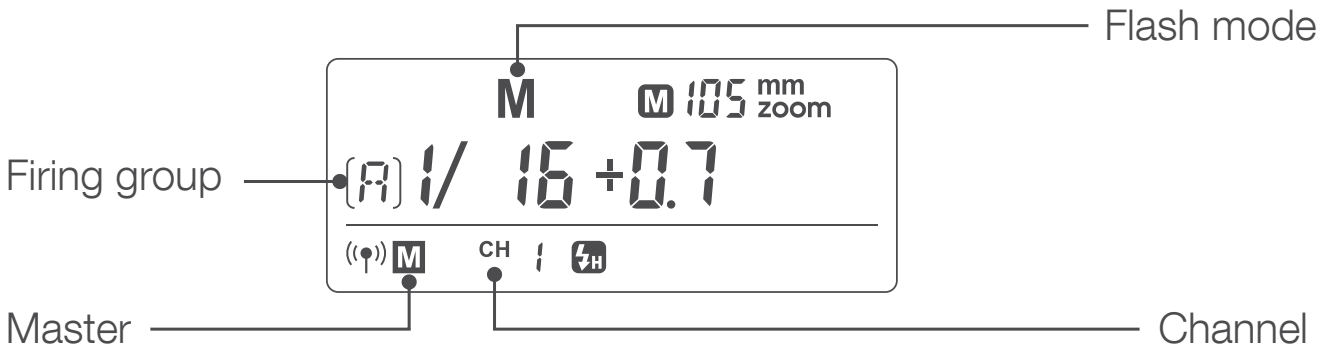

- **Slave unit**

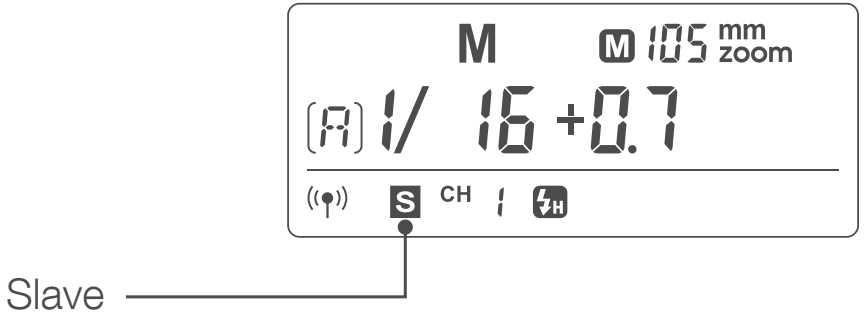

What’s in the Box of AP-305C?

- Flash unit
- Mini stand
- Protection case

ATTACHING TO A CAMERA

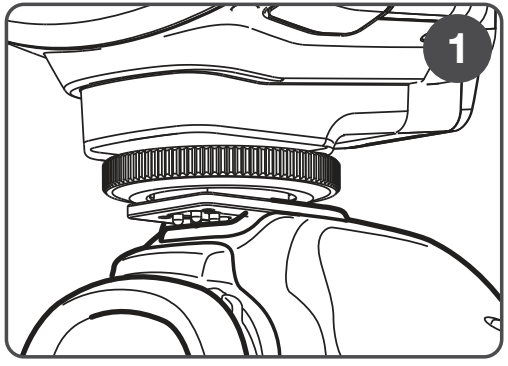

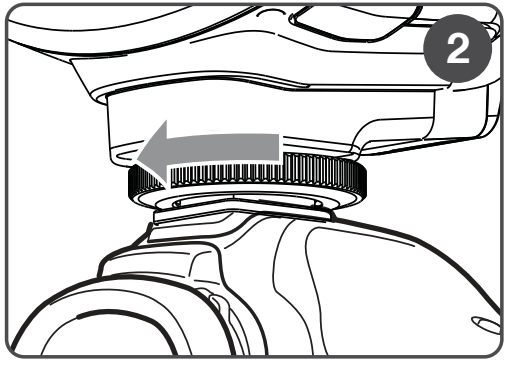

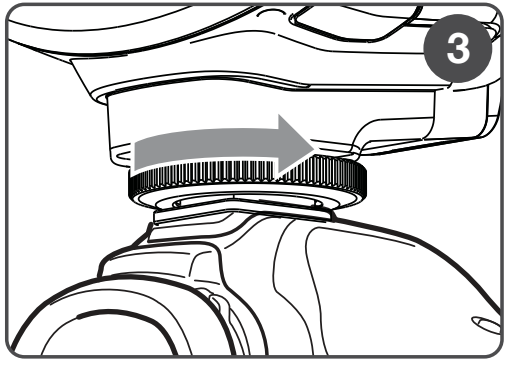

1. Attach the Camera Flash. Slip the camera flash's mounting foot into the camera's hotshoe all the way.

2. Secure the Camera Flash. Rotate the lock ring on the mounting foot until it locks up.

3. Detach the Camera Flash. Rotate the lock ring on the mounting foot until it is loosened.

POWER MANAGEMENT

Press ⏻ Power Switch to power the flash unit on or off (long press the button for one second).
Flash unit will enter sleep mode after a certain period of idle use. Pressing the camera shutter halfway or pressing any flash button will wake up the flash unit.

Set as Master Slave – Will enter sleep mode after approx. 90 sec.
Set as Slave Flash – Will enter sleep mode after approx. 60 min. (adjustable)

C.Fn

Disabling Auto Power Off function is recommended when the flash is used off camera. (C. Fn-ST, Page 48)

FLASH MODE: TTL AUTOFLASH

This flash has three flash modes: TTL, Manual (M), and Multi (Stroboscopic). In TTL mode, the camera and the flash will work together to calculate the correct exposure for the subject and the background. In this mode, multiple TTL functions are available: FEC, HSS, second curtain sync, etc.

Press <**MODE**> Mode Selection Button and three flash modes will display on the LCD panel one by one with each pressing.

TTL MODE

Press <**MODE**> Mode Selection Button to enter TTL mode. The LCD panel will display <**TTL**>.

- Press the camera release button halfway to focus.

• When the shutter button is fully pressed, the flash will fire a preflash that the camera will use to calculate exposure and flash output the instant before the photo is taken.

Display “**Hi**”: When the flash output value is up to the maximum value, “Hi” will be displayed and blinking for 3 seconds. Adjust the camera’s parameters if underexposure appears.

Display “**Lo**”: When the flash output value is up to the minimum value, “Lo” will be displayed and blinking for 3 seconds. Adjust the camera’s parameters if overexposure appears.

FEC: FLASH EXPOSURE COMPENSATION

With FEC function, this flash can adjust from -3 to +3 in 1/3rd stops. It is useful in situations where minor adjusting of the TTL system is needed based on the environment.

Setting FEC:

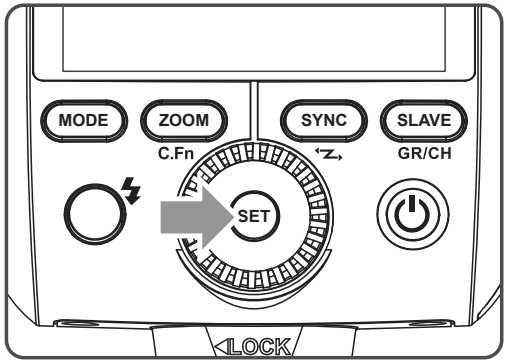

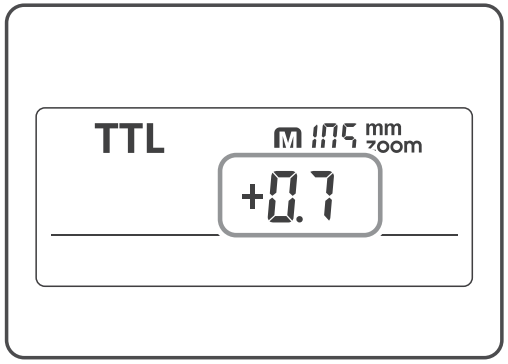

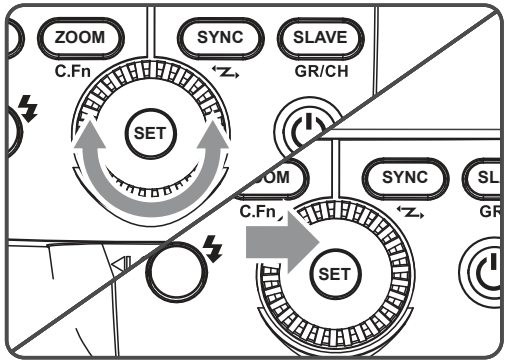

- Press the **SET** Button and the flash exposure compensation amount will be highlighted on the LCD panel.
- Turn the Select Dial to set the amount.
  - “0.3” means 1/3 step, “0.7” means 2/3 step.
  - To cancel the flash exposure compensation, set the amount to “+0”.
- Press <**SET**> button again to confirm the setting.

HIGH-SPEED SYNC

High Speed Sync (FP flash) enables the flash to synchronize with all camera shutter speeds. This is convenient when you want to use aperture priority for fill-flash portraits.

Choose the <H> button:

Press the <**SYNC**> button to turn on high-speed sync function.

- With high-speed sync, the faster the shutter speed, the shorter the effective flash range.
- Multi flash mode cannot be set in high-speed sync mode.
- Over-temperature protection may be activated after 15 consecutive high-speed sync flashes.
- Try to avoid using high-speed sync flash, which will cut short flash tube's lifetime.

SECOND-CURTAIN SYNC

With a slow shutter speed, you can create a light train following the subject. The flash fires right before the shutter closes.

• Press the <**SYNC**> button then the < ⧐ > icon displayed on the panel. The Second-Curtain Sync does not function in the wireless mode or the Multi mode.

FLASH MODE: MANUAL FLASH

The flash output is adjustable from 1/1 full power to 1/128th power in 1/3rd stop increments. To obtain a correct flash exposure, use a hand-held flash meter to determine the required flash output.

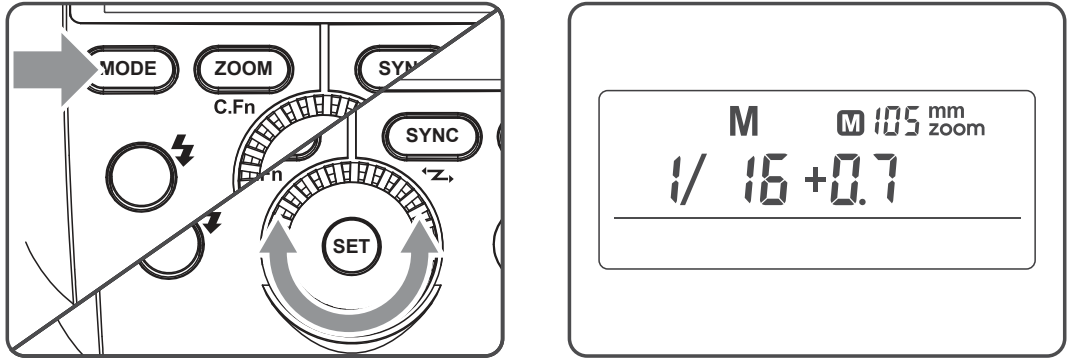

- Press <**MODE**> button so that <**M**> is displayed.
- Turn the Select Dial to choose a desired flash output amount.

In high-speed sync mode, the adjustable flash range is 1/16~1/1.

Flash Output Range

The following table makes it easier to see how the stop changes in terms of f/stop when you increase or decrease the flash output. For example, when you decrease the flash output to 1/2, 1/2-0.3, or 1/2-0.7, and then increase the flash output to more than 1/2, 1/2+0.3, 1/2+0.7, and 1/1 will be displayed.

Figures displayed when reducing flash output level →

1/1	1/1-0.3	1/1-0.7	1/2	1/2-0.3	1/2-0.7	1/4	.....
	1/2+0.7	1/2+0.3		1/4-0.7	1/4+0.3		.....

← Figures displayed when increasing flash output level

In the M mode, high-speed sync and second curtain sync functions can be achieved.

- **Optical S1 Secondary Unit Setting**

In M manual flash mode, press the <**SLAVE**> button so that this flash can function as an optic S1 secondary flash with optic sensor. With this function, the flash will fire synchronously when the main flash fires, the same effect as that by the use of radio triggers. This helps create multiple lighting effects.

- **Optical S2 Secondary Unit Setting**

Press the <**SLAVE**> button so that this flash can also function as an optic S2 secondary flash with optic sensor in M manual flash mode. This is useful when cameras have pre-flash function. With this function, the flash will ignore a single “preflash” from the main flash and will only fire in response to the second, actual flash from the main unit.

• S1 and S2 optic triggering and off camera high-speed mode are only available in M manual flash mode.

MULTI STROBOSCOPIC FLASH

With stroboscopic flash mode, a rapid series of flashes is fired. It can be used to capture multiple images of a moving subject in a single photograph.

You can set the firing frequency (number of flashes per sec. expressed as Hz), the number of flashes, and the flash output.

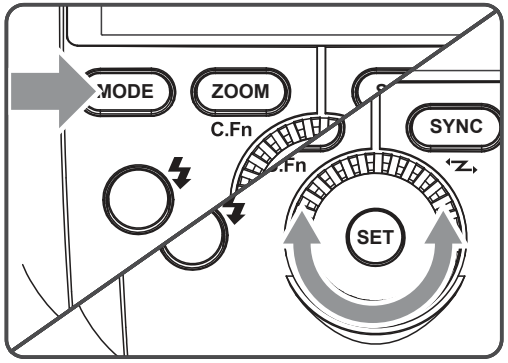

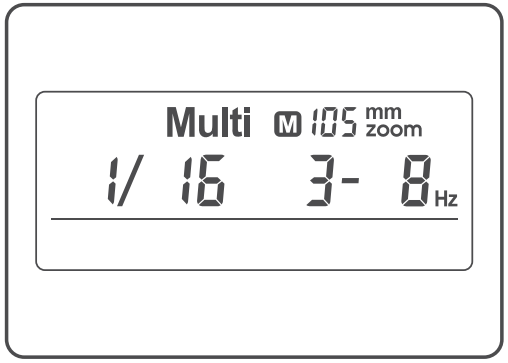

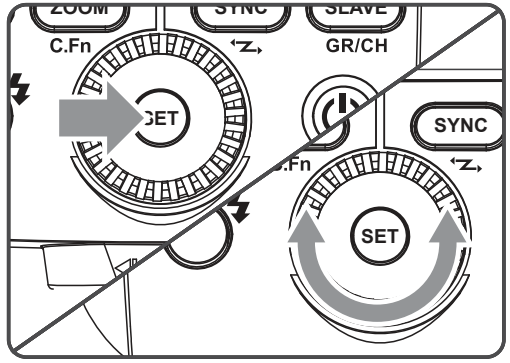

- Long press the <**MODE**> button for 2 seconds so that <**Multi**> is displayed.
- Turn the Select Dial to choose a desired flash output.
- Set the flash frequency and flash times.

  - Press the **SET** Button to select the flash frequency. Turn the Select Dial to set the number.

  - Press the **SET** Button again to select the flash times. Turn the Select Dial to set the number.

Calculating the Shutter Speed

During stroboscopic flash, the shutter remains open until the firing stops. Use the formula below to calculate the shutter speed and set it with the camera.

Number of Flashes/Flash Frequency = Shutter Speed

For example, if the number of flashes is 10 and the firing frequency is 5 Hz, the shutter speed should be at least 2 seconds.



To avoid overheating and deteriorating the flash head, do not use stroboscopic flash more than 10 times in succession. After 10 times, allow the camera flash to rest for at least 15 minutes.

If you try to use the stroboscopic flash more than 10 times in succession, the firing might stop automatically to protect the flash head. If this happens, allow at least 15 minutes rest for the camera flash.



- Stroboscopic flash is most effective with a highly reflective subject against a dark background.
- Using a tripod and a remote control is recommended.
- Stroboscopic flash can be used with “**bulb mode**”.
- If the number of flashes is displayed as “--”, the firing will continue until the shutter closes or the battery is exhausted. The number of flashes will be limited as shown by the following table.

Maximum Stroboscopic Flashes:

Flash Output \ HZ	1	2	3	4	5	6-7	8-9	10-19	20-50	60-90
1/4	6	3	2	2	2	2	2	2	2	2
1/8	14	14	6	4	3	3	3	2	2	2
1/16	30	30	30	20	10	8	5	3	3	3
1/32	60	60	60	50	50	40	12	5	5	5
1/64	90	90	90	80	80	70	60	20	10	10
1/128	90	90	90	90	90	90	80	70	30	20

WIRELESS FLASH SHOOTING: RADIO (2.4G) TRANSMISSION

• You can set up three slave groups for TTL autoflash shooting. With TTL autoflash, you can easily create various lighting effects.
• Any flash settings for the slave units on the master flash in TTL mode will be automatically sent to the slave units. So the only thing you need to do is to set the master unit for each slave group. There is no need to operate the actual slave units at all during the shooting.
• This flash can work in **TTL/M/Multi/OFF** flash modes when set as a master unit.

As a master unit. The AP-305C can control multiple AP-305C flashes (TTL/M/Multi).
As a slave unit. The AP-305C can be controlled by the following master unit models, RT-305 (M mode only), AP-305C (TTL/M/Multi).

• Even with multiple slave units, the master unit can control all of them via wireless.

• In this user manual, “master unit” refers to the camera flash on a camera and “slave unit” will be controlled by the master unit.

1. WIRELESS SETTINGS

You can switch between normal flash and wireless flash. For normal flash shooting, be sure to set the wireless setting to OFF.

Master Unit Setting

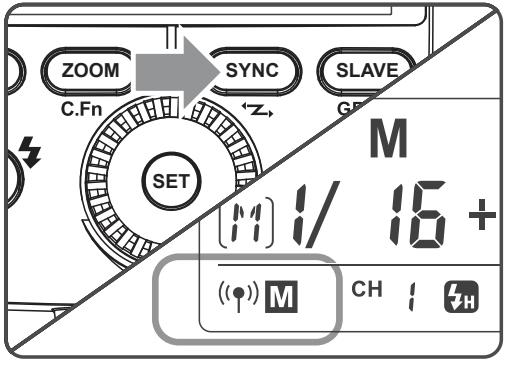

Long Press the <**SYNC**> button for 2 seconds so that <((•))> is blinking. Turn the Select Dial until the <((•))M> is displayed on the LCD panel, which means the master unit.

Slave Unit Setting

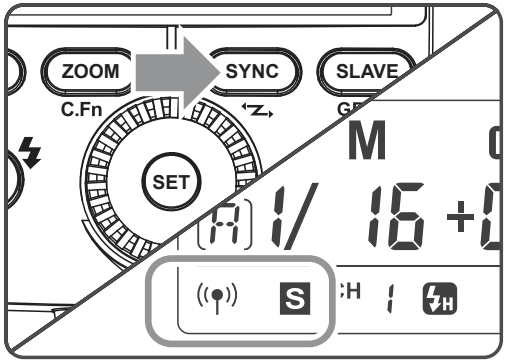

Long Press the <**SYNC**> button for 2 seconds so that <((•))> is blinking. Turn the Select Dial until the <((•)) S> is displayed on the LCD panel, which means the slave unit.

2. SETTING GROUP UNIT'S FLASH MODE

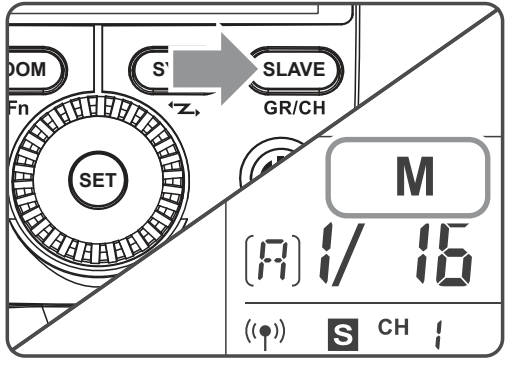

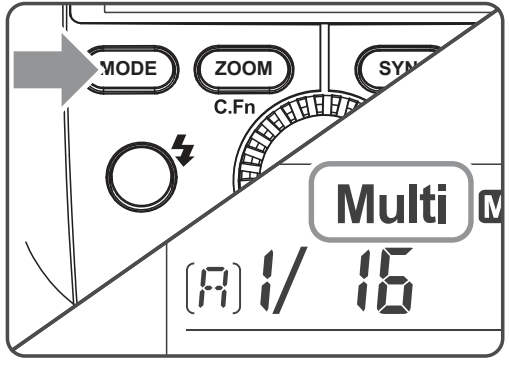

• Press the <**SLAVE**> Button to choose the group from **A/B/C**. Then, press the <**MODE**> Button so that the master unit can work in **OFF/TTL/M** flash mode. Choose one of them as the flash mode of master unit.

• Press the <**MODE**> Button for 2 seconds to switch to Multi mode.

3. MASTER UNIT'S FLASH OFF

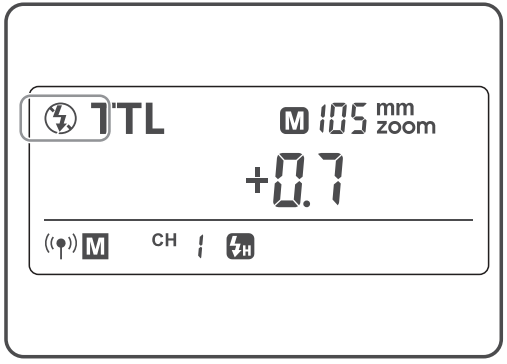

When the flash is attached to a camera, enter the external speedlite control on the camera menu.

Turn off the master control flash on the camera. The <⚡> icon will blink on the AP-305C panel, and the flash master control unit is disabled. In the camera menu select turn on to cancel the master control unit disabled.

4. SETTING THE COMMUNICATION CHANNEL

If there are other wireless flash systems nearby, you can change the channel IDs to prevent signal interference. The channel IDs of the master unit and the slave unit(s) must be set to the same.

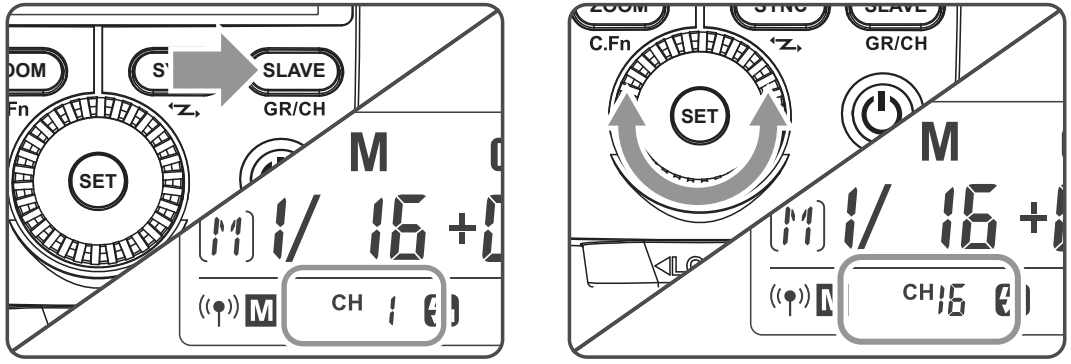

- Long press the <**SLAVE**> Button for 2 seconds until the channel IDs is blinking. Turn the Select Dial to choose a channel ID from 1 to 16.
- Press the <**SET**> button to confirm.

5. TTL: FULLY AUTOMATIC WIRELESS FLASH SHOOTING

Autoflash Shooting with One Slave Unit

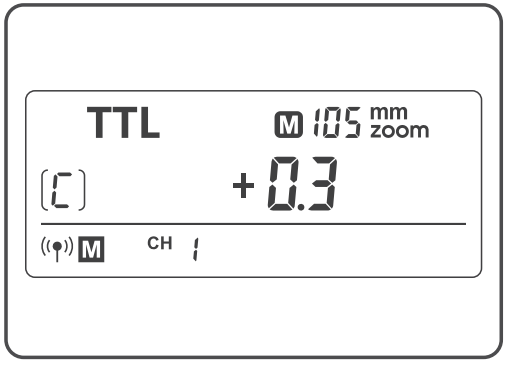

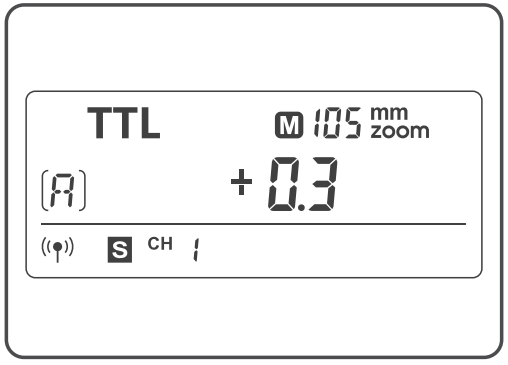

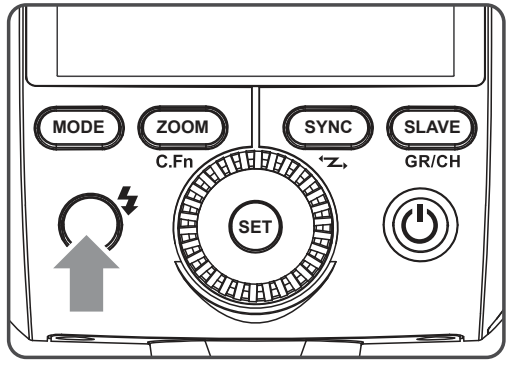

- Master Unit Setting:

  - Attach a AP-305C camera flash on the camera and set it as the master unit. (Page 30)

  - **A/B/C** can be set as **TTL** mode independently.

- Slave Unit Setting:

  - Set the AP-305C that to be controlled as the wireless slave unit. (Page 31)

- The slave unit can be set as **A/B/C**.

- Check the communication channel:

  - If the master unit and slave unit(s) are set to a different channel, set them to the same channel. (Page 33)

- Position the camera and flashes:

  - Position the camera and flashes as the picture shows. (Page 39-41)

- Check the flash operation:

  - Press the master unit's Test Button <⚡>.

  - Then, the slave unit will fire. If not, adjust the slave unit's angle toward the master unit and distance from the master unit.

The slave unit might be out of order or fire an unwanted flash due to the nearby wifi routers or other 2.4G equipments. If in this case, please adjust the flash's channel or turn off the 2.4G equipments.

6. M: WIRELESS FLASH SHOOTING WITH MANUAL FLASH

This describes wireless (multiple shooting) using manual flash. You can shoot with a different flash output setting for each slave unit (firing group). Set all parameters on the master unit.

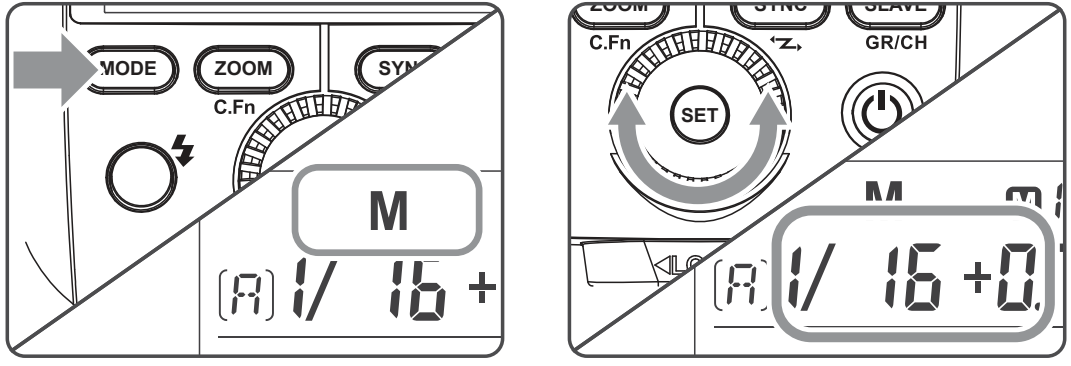

• Setting the flash mode to <**M**>:

Press the <**MODE**> Button to set the flash to M mode.

• Setting flash output:

Turn the Select Dial to set the flash output of the groups.

• Taking the picture:

Each group fires at the set flash ratio.

7. MULTI: WIRELESS FLASH SHOOTING WITH MANUAL FLASH

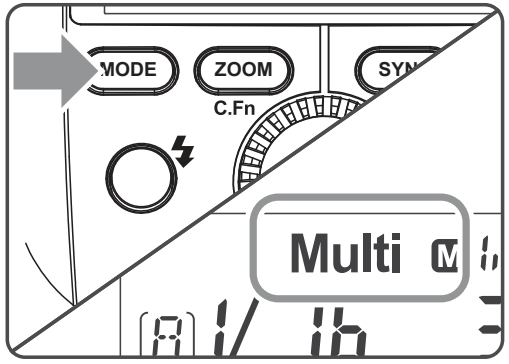

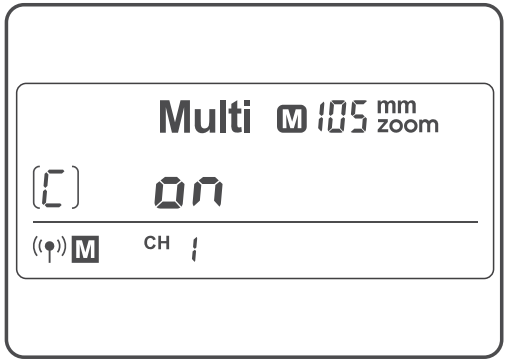

• Setting <**Multi**> stroboscopic flash:

Long press the <**MODE**> button for 2 seconds so that <**Multi**> is displayed.
Long press the <**MODE**> button for 2 seconds again to exit.

- Setting flash output/flash frequency/flash times:

  - Setting the flash output/flash frequency/flash times in the A group. Setting the multi flash mode. (Page 24-25)

  - B and C group can only control the ON/OFF of the slave unit by pressing the <**MODE**> Button.

Using a flash (master/slave) with a radio transmission wireless shooting function makes it easy to shoot with advanced wireless multiple flash lighting, in the same way as TTL autoflash shooting.

The basic relative position and operation range are as shown in the picture. You can then perform wireless TTL autoflash shooting just by setting the master unit to <**TTL**>.

Slave/Master Unit's Positioning and Operation Range

Autoflash Shooting with One Slave Unit:

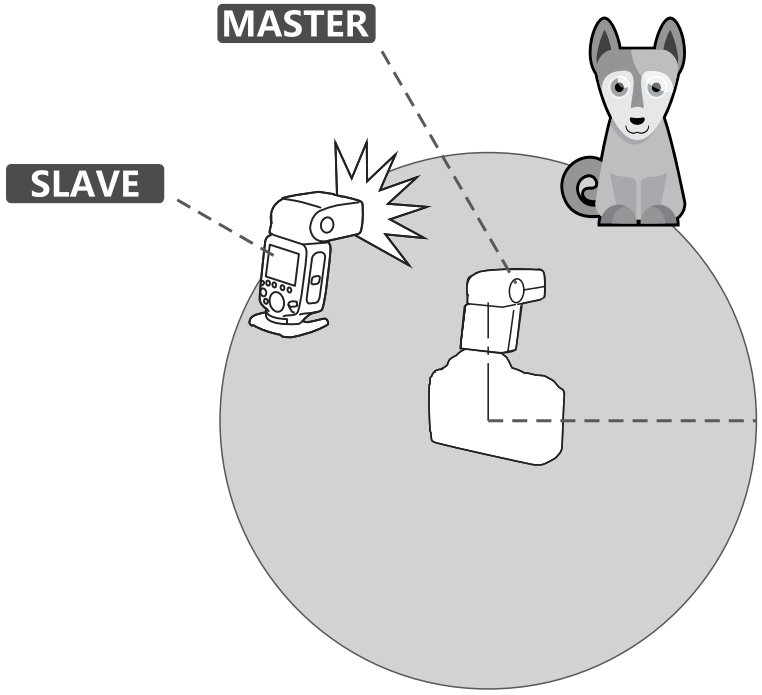

Transmission distance is about 30 m.

- Use the supplied mini stand to position the slave unit.
- Before shooting, perform a test flash and test shooting.
- The transmission distance might be shorter depending on the conditions such as positioning of slave units, the surrounding environment and weather conditions.

Wireless Multiple Flash Shooting

You can divide the slave units into two or three groups and perform TTL autoflash while changing the flash ratio (factor). In addition, you can set and shoot with a different flash mode for each firing group, for up to 3 groups.

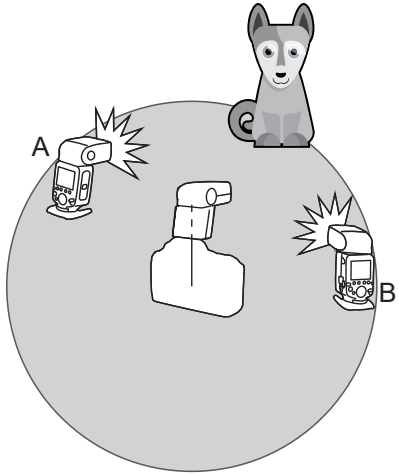

- Auto Shooting with Two Slave Groups.

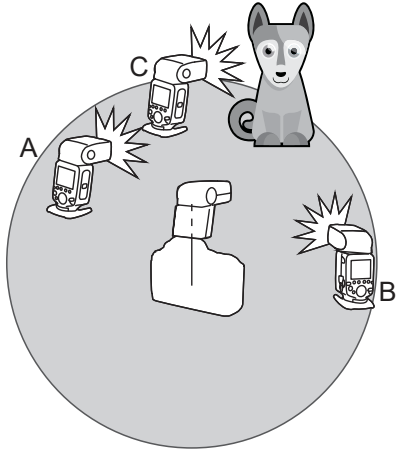

- Auto Shooting with Three Slave Groups.

OTHER APPLICATIONS

Auto Focus Assist Beam

In poorly-lit or low-contrast shooting environments, the built-in auto focus assist beam will automatically light on to make it easier for autofocus.The beam will illuminate only when auto focus is difficult, and will cut out as soon as AF is achieved.

The AF assistant will only work in when the AF-S is selected on the camera.

Position	Effective Range
Center	0.6 - 4 m
Periphery	0.6 - 2.5 m

Bounce Flash

By pointing the flash head toward a wall or ceiling, the flash will bounce off the surface before illuminating the subject. This can soften shadows behind the subject for a more natural-looking shot. This is called bounce flash.

To set the bounce direction, hold the flash head and turn it to a satisfying angle.

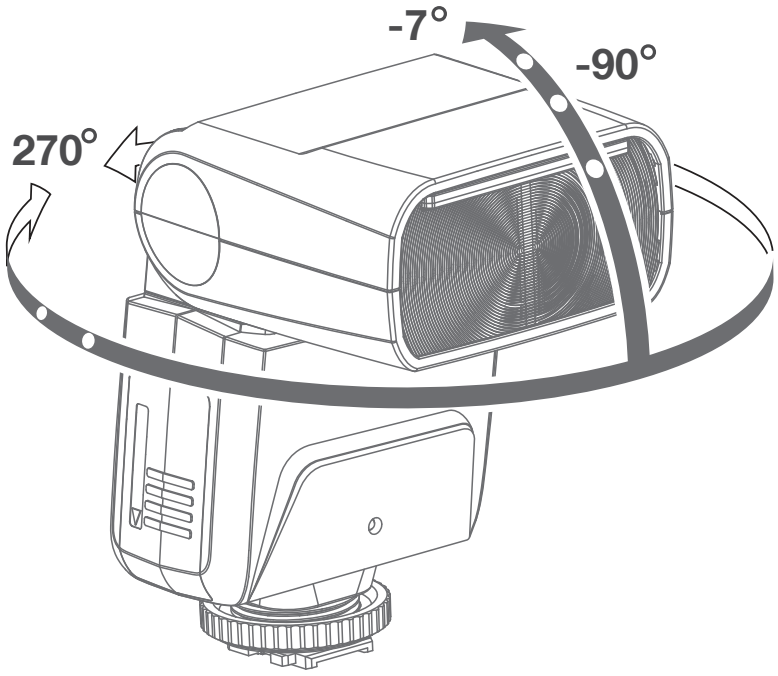

- If the wall or ceiling is too far away, the bounced flash might be too weak and result in underexposure.
- The wall or ceiling should be a plain, white color for high reflectance. If the bounce surface is not white, a color cast may appear in the picture.

Creating a Catchlight

With the catchlight panel, you can create a catchlight in the subject's eyes to add life to the facial expression.

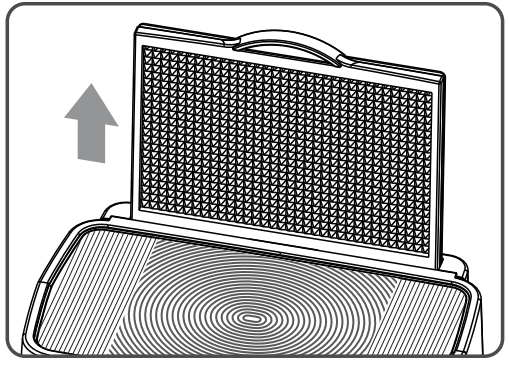

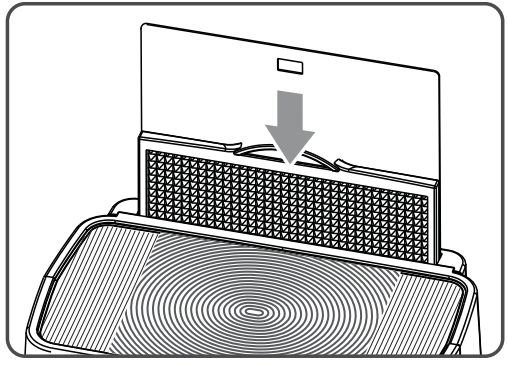

- Point the flash head upward by 90°.
- Pull out the wide panel. The catchlight panel will come out at the same time.
- Push the wide panel back in.
  - Push in only the wide panel.
  - Follow the same procedures as for bounce flash.



- Point the flash head straight ahead and then upward by 90°. The catchlight will not appear if you swing the flash head left or right.
- For best catchlight effect, stay 1.5 m/4.9 ft away from the subject.

ZOOM: Setting the Flash Coverage and Using the Wide Panel

The flash coverage can be set automatically or manually. It can be set to match the lens focal length from 24 mm to 105 mm. Also, with the built-in wide panel, the flash coverage can be expanded for 14 mm wide-angle lenses.

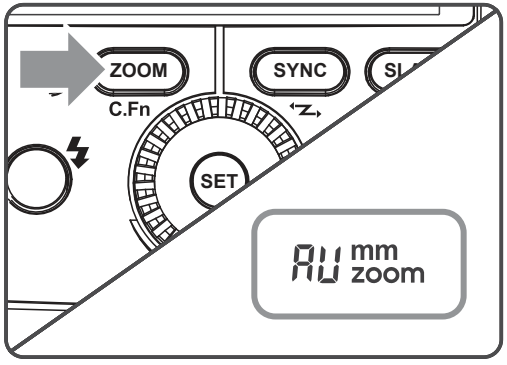

- In Manual Zoom mode, press the <**ZOOM**> button.
- Turn the Select Dial to change the flash coverage.
- If <**AU**> is displayed, the flash coverage will be set automatically.

- If you set the flash coverage manually, make sure it covers the lens focal length so that the picture will not have a dark periphery.
- When the low battery indicator is displayed, the ZOOM can not be adjusted, it will constantly be 24 mm.

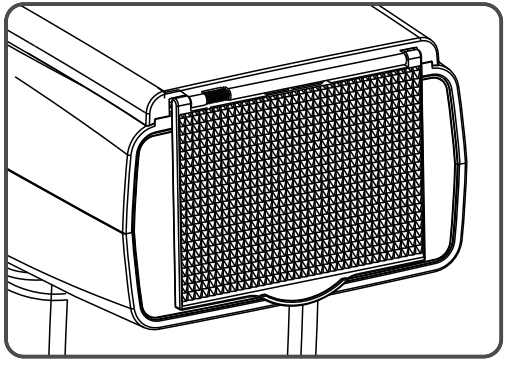

Using the Wide Panel

Pull out the wide panel and place it over the flash head as shown. The flash coverage will then be extended to 14 mm.

The catchlight panel will come out at the same time. Push the catchlight panel back in.

When pull out the wide panel, the ZOOM will constantly be 14 mm.

The <**ZOOM**> button will not work.

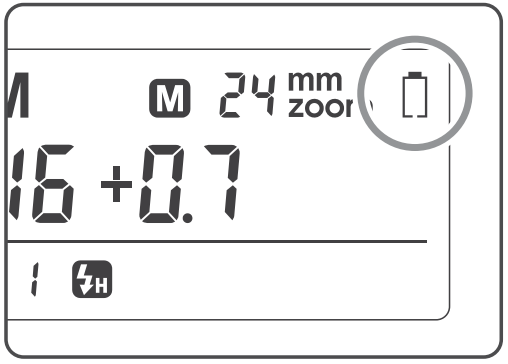

Low Battery Warning

If the battery power is low, <▯> will appear and blink on the LCD panel. Please replace the battery immediately. When the low battery indicator is displayed, the ZOOM can not be adjusted, it will constantly be 24 mm.

C. FN: SETTING CUSTOM FUNCTIONS

The following table lists the available and unavailable custom functions of this flash.

C.Fn Custom Functions			
Custom Function Signs	**Function**	**Setting No.**	**Settings & Description**
ST	Auto sleep (standby)	ON	ON
		OF	OFF
AF	AF-assist beam	ON	ON
		OF	OFF
BL	Backlighting control	10 Sec	Off in 10 Sec
		OF	Always off
		ON	Always lighting

- Press the <**ZOOM**> button for 2 seconds until C. Fn menu is displayed.
- Turn the select dial to select the custom functions.
- Press the <**SET**> button and the setting No. blinks.
- Turn the select dial to set the desired number. Pressing the <**SET**> button will confirm the settings.
- Press the <**ZOOM**> button to exit.

PROTECTION FUNCTION

Overheating Protection

- To avoid overheating and deteriorating the flash head, do not fire more than 30 continuous flashes in fast succession at 1/1 full power. After 30 continuous flashes, allow a rest time of at least 10 minutes.
- If you fire more than 30 continuous flashes and then fire more flashes in short intervals, the inner over-temperature protection function may be activated and makes the recycling time over 10 seconds. If this occurs, allow a rest time of about 10 minutes, and the flash unit will then return to normal.
- When the overheating protection has started, is shown on the LCD panel.

Power Output	Times
1/1	15
1/2 (+0.3, +0.7)	20
1/4 (+0.3, +0.7) 1/8 (+0.3 , +0.7)	30
1/16 (+0.3, +0.7)	40

Number of flashes that will activate over-temperature protection in high-speed sync triggering mode.

Power Output Level	Number of Flashes
1/1	30
1/2 + 0.7	40
1/2 + 0.3	50
1/2	60
1/4 (+0.3, +0.7)	100
1/8 (+0.3 , +0.7)	200
1/16 (+0.3, +0.7)	300
1/32 (+0.3, +0.7)	500
1/64 (+0.3, +0.7) 1/128 (+0.3, +0.7)	1000

Number of flashes that will activate over-temperature protection.

Other Protections

The system provides real-time protection to secure the device and your safety. The following lists prompts for your reference:

Prompts on LCD Panel	Meaning
E1	A failure occurs on the recycling system so that the flash cannot fire. Please restart the flash unit. If the problem still exists, please send this product to a maintenance center.
E3	The voltage on two outlets of the flash tube is too high. Please send this product to a maintenance center.
E9	There are some errors occurred during the upgrading process. Please using the correct firmware upgrade method.

FIRMWARE UPGRADE

This flash supports firmware upgrade through the USB port. Update information will be released on our official website.

USB connection line is not included in this product. The USB port is a standard Micro USB socket. Common USB connection line is applicable.

Checking the version: Press the <**MODE**> Button and the turn the flash on. Then, the firmware update version (e.g. Version 1.0 will read U-1.0) will be displayed on the LCD panel.

TECHNICAL DATA

Model	AP-305C
Type	
Compatible Cameras	Please reference to compatible camera models (page 59)
Guide No. (1/1 output @ 105 mm)	36 m (ISO 100 ft)
Flash Coverage	24 to 105 mm
	Auto zoom (Flash coverage set automatically to match the lens focal length and image size)
	Manual zoom
	Swinging/tilting flash head (bounce flash): 0 to 270° horizontally and -7° to 90° vertically
Flash Duration (t0.1)	1/350 to 1/20000 seconds

Exposure Control	
Exposure control system	TTL autoflash and manual flash
Flash exposure compensation (FEC)	Manual. FEB: ±3 stops in 1/3 stop increments (Manual FEC can be combined.)
Sync mode	High-speed sync (up to 1/8000 seconds), first-curtain sync, and second-curtain sync
Multi flash	Provided (up to 90 times, 90 Hz)
Wireless Flash (2.4G radio transmission)	
Wireless flash function	Master, Slave, Off
Controllable slave groups	3 (A, B and C)
Transmission range (approx.)	≤ 30 m
Channels	16 (1~16)
Auto Focus Assist Beam	
Effective range (approx.)	Center: 0.6~4 m Periphery: 0.6~2.5 m

Power Supply	
AA batteries	Ni-MH batteries (recommended) or 2*LR6 alkaline batteries
Recycle time (Approx.)	0.1-2.2 seconds (eneloop Ni-MH batteries of Panasonic). Red LED indicator will light up when the flash is ready.
Full power flashes	Approx. 210 (2500mA Ni-MH batteries)
Power saving	Power off automatically after approx. 90 seconds of idle operation. (60 minutes if set as slave)
Sync Triggering Mode	Hotshoe, optic triggering
Dimensions	
W x H x D	140*62*38 mm
Weight without battery	200 g

TROUBLESHOOTING

If there is a problem, refer to this Troubleshooting Guide.

The Camera Flash cannot be charged.

- The battery is installed in the wrong direction.
  - Install the battery in the correct direction.
- The camera flash's internal battery is exhausted.
  - If <[]> appears and blinks on the LCD panel, replace the battery immediately.

The Camera Flash does not fire.

- The camera flash is not attached securely to the camera.
  - Attach the camera's mounting foot securely to the camera.

• The electrical contacts of the Camera Flash and camera are dirty.

- Clean the contacts.

The power turns off by itself.

• After 90 seconds of idle operation, auto power off took effect if the flash is set as master.

- Press the shutter button halfway or press any flash button to wake up.

• After 60 minutes of idle operation, the flash unit will enter sleep mode if it is set as slave.

- Press any flash button to wake up.

Auto zoom does not work.

• The camera flash is not attached securely to the camera.

- Attach the camera flash’s mounting foot to the camera.

The flash exposure is underexposed or overexposed.

- You used high-speed sync.

  - With high-speed sync, the effective flash range will be shorter. Make sure the subject is within the effective flash range displayed.

- You used Manual Flash mode.

  - Set the flash mode to TTL or modify the flash output.

Photos have dark corners or only parts of the target subject are illuminated.

- The focal length of lens exceeds the flash coverage.

  - Check the flash coverage you set. This flash unit has the flash coverage between 24 and 105 mm, which fits medium-format cameras. Pull the wide panel out to extend the flash coverage.

COMPATIBLE CAMERA MODELS

This flash unit can be used on the following Canon camera models:

- 77D
- 80D
- 60D
- 600D
- 30D
- 100D
- 1100D
- 760D
- 5D Mark III
- 5D Mark IV
- 6D
- 6D Mark II
- 7D
- 7D Mark II
- Digital X
- All Rebel Series
- EOS R
- EOS M6
- EOS M5
- EOS M3
- EOS M50



This table only lists the tested camera models, not all Canon series cameras.
For the compatibility of other camera models, a self-test is recommended.
Rights to modify this table are retained.

MAINTENANCE

- Shut down the device immediately should abnormal operation be detected.
- Avoid sudden impacts and the product should be dedusted regularly.
- It is normal for the flash tube to be warm when in use. Avoid continuous flashes if unnecessary.
- Maintenance of the flash must be performed by our authorized maintenance department which can provide original accessories.
- This product, except consumables e.g. flash tube, is supported with a one-year warranty.
- Unauthorized service will void the warranty.
- If the product has a failure or is exposed to water, do not use it until it is repaired by professionals.
- Changes made to the specifications or designs may not be reflected in this manual.

FCC WARNING

Any Changes or modifications not expressly approved by the party responsible for compliance could void the user's authority to operate the equipment. This device complies with part 15 of the FCC Rules. Operation is subject to the following two conditions: (1) This device may not cause harmful interference, and (2) this device must accept any interference received, including interference that may cause undesired operation.

FCC Radiation Exposure Statement:

This equipment complies with FCC radiation exposure limits set forth for an uncontrolled environment. This transmitter must not be colocated or operating in conjunction with any other antenna or transmitter.


altura
PHOTO ®