CHEFMAN

14-Quart Multifunctional Air Fryer+

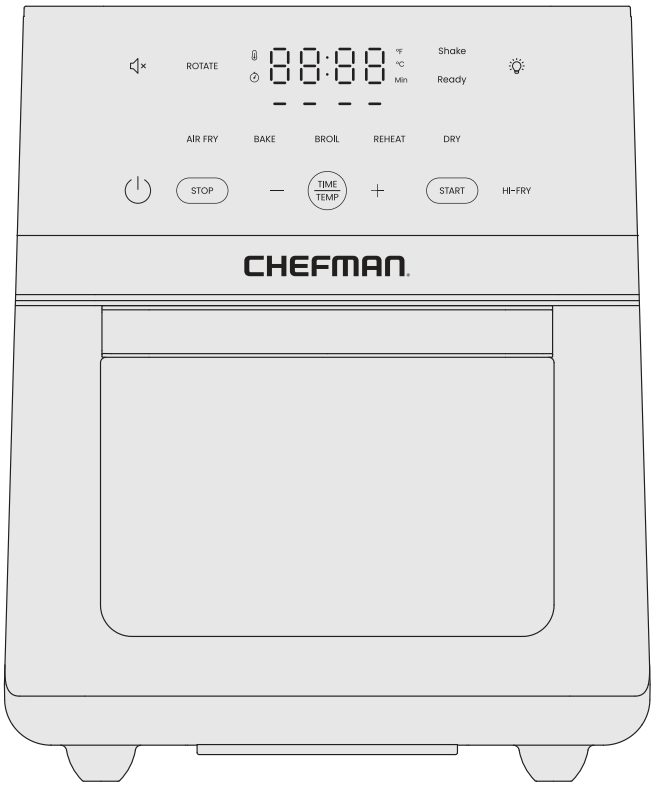

RJ38-RDO-14B

Get to Know Your Air Fryer

1. Capacitive Touch Control Panel
2. Wire Cooking Racks (3)
3. Drip Tray | Baking Pan
4. Rotisserie Fetch Tool
5. Rotisserie Spit
6. Spit Forks and Screws (2 of each)
7. Oven Door Cool-Touch Handle
8. Oven Door with Viewing Window
9. Lower heating elements (upper elements not shown)
10. Rack Holders
11. Integrated Power Cord Storage (on back, not shown)

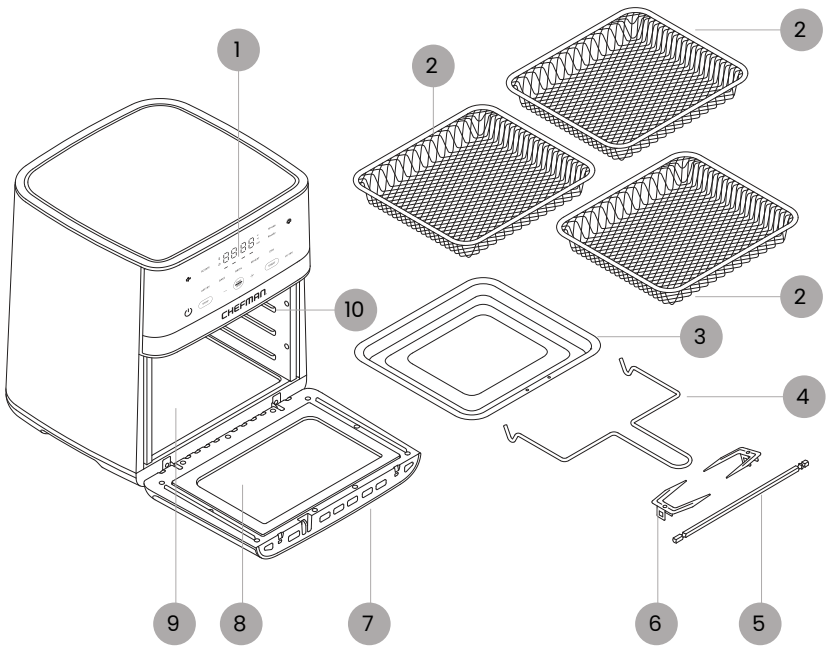

RJ38-RDO-14B_UG_LIVE_111425.indd 2 11/14/25 1:53 PM

Control Panel

1. Sound Button
2. ROTATE Button
3. Temp | Time Display
4. Shake Indicator Light
5. Ready Indicator Light
6. Oven Light Button
7. Cook Function Buttons
8. HI-FRY Button
9. START Button
10. TIME | TEMP selector Button
11. Time | Temp + and - Buttons
12. STOP Button
13. Power Button

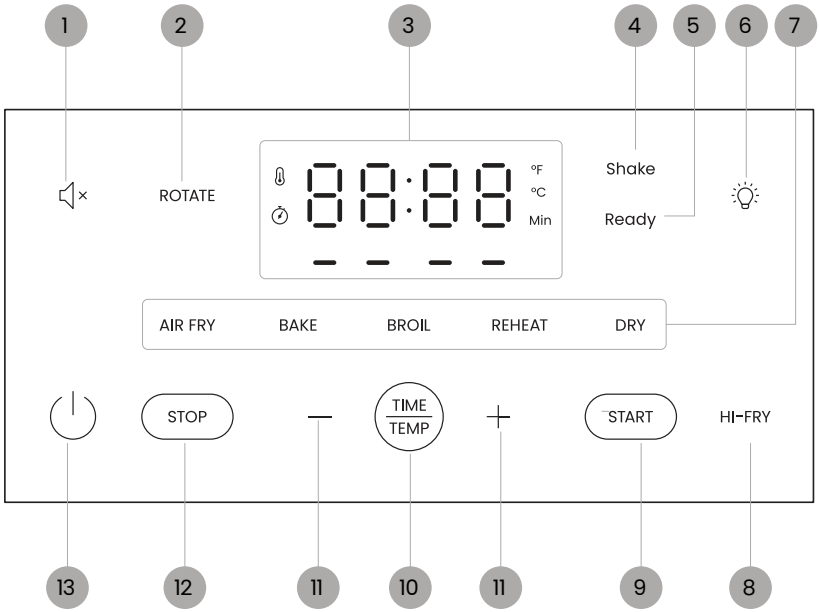

READ ALL INSTRUCTIONS BEFORE USE

For your safety and continued enjoyment of this product, always read the instruction manual before using.

RJ38-RDO-14B_UG_LIVE_111425.indd 3 11/14/25 1:53 PM

SAFETY INSTRUCTIONS & IMPORTANT SAFEGUARDS

WARNING: When using electrical appliances, basic safety precautions should always be followed, including:

1. Read all instructions.
2. Do not touch hot surfaces. Use handles or knobs.
3. To protect against electrical shock, do not immerse cord or plug in water or other liquid.
4. Close supervision is necessary when any appliance is used by or near children.
5. Unplug from outlet when not in use and before cleaning. Allow to cool before putting on or taking off parts.
6. Do not operate any appliance with a damaged cord or plug or after the appliance malfunctions or has been damaged in any manner. If this should occur, contact Chefman Customer Support for examination, repair, or adjustment.
7. The use of accessory attachments not recommended by Chefman may cause injuries.
8. Do not use outdoors.
9. Do not let cord hang over edge of table or counter, or touch hot surfaces.
10. Do not place on or near a hot gas or electric burner, or in a heated oven.
11. Extreme caution must be used when moving an appliance containing hot oil or other hot liquids.
12. Always attach plug to appliance first, then plug cord into the wall outlet.
13. To disconnect, turn any control to off, then remove plug from wall outlet.
14. Do not use appliance for other than intended use.
15. When using this appliance, provide adequate ventilation above and on all sides for air circulation. Do not allow this appliance to touch curtains, wall coverings, clothing, dish towels or other flammable materials during use. Do not cover air fryer, and ensure air vents, located on the back of the fryer, are not covered.

RJ38-RDO-14B_UG_LIVE_111425.indd 4 11/14/25 1:53 PM

SAFETY INSTRUCTIONS & IMPORTANT SAFEGUARDS

16. This appliance generates heat during use. Proper precautions must be taken to prevent the risk of burns, fire, or other damage to persons or property. Keep hands clear of the immediate area surrounding the air fryer during operation and use grips and handles on the appliance when operating. Do not put hands or other body parts inside the air fryer housing while in use or hot.
17. Use caution when opening the air fryer. The inside of the unit and its contents are very hot. Use tongs or protective gloves to remove food from trays.
18. Do not move the air fryer while it is in use and/or full of food.
19. Always unplug the air fryer after use.
20. Never place the air fryer in the dishwasher. This product housing cannot be immersed in water and is not dishwasher safe.
21. The housing of the air fryer can be wiped down between uses with a nonabrasive cleaner.
22. Store air fryer in a cool, dry place.
23. Never wrap the cord tightly around the appliance during use or storage; this may cause the wire to fray and break.

SAVE THESE INSTRUCTIONS FOR HOUSEHOLD USE ONLY

RJ38-RDO-14B_UG_LIVE_111425.indd 5 11/14/25 1:53 PM

SAFETY INSTRUCTIONS & IMPORTANT SAFEGUARDS

WARNING: This appliance has a polarized plug (one blade is wider than the other). To reduce the risk of electric shock, this plug is intended to fit into a polarized outlet only one way. If the plug does not fit fully into the outlet, reverse the plug. If it still does not fit, contact a qualified electrician. Do not attempt to modify the plug in any way.

Short Cord Instructions

A short power-supply cord is provided to reduce the hazards resulting from entanglement or tripping over a longer cord. Longer detachable power-supply cords or extension cords are available and may be used if care is exercised in their use. If a longer detachable power-supply extension cord is used:

1. The marked electrical rating of the extension cord should be at least as great as the electrical rating of the appliance.
2. The longer cord should be arranged so that it will not drape over the countertop or tabletop where it can be pulled on by children or tripped over.

RJ38-RDO-14B_UG_LIVE_111425.indd 6 11/14/25 1:53 PM

SAFETY INSTRUCTIONS & IMPORTANT SAFEGUARDS

Power Cord Safety Tips

1. Never pull or yank on the cord or the appliance.
2. To insert the plug, grasp it firmly and guide it into the outlet.
3. To disconnect the appliance, grasp the plug and remove it from the outlet.
4. Never use the product if the power cord shows signs of abrasion or excessive wear. Contact Chefman Customer Support for additional guidance and support.
5. Never wrap the cord tightly around the appliance, as this could place undue stress on the cord where it enters the appliance and cause it to fray and break.

DO NOT OPERATE THE APPLIANCE IF THE POWER CORD SHOWS ANY DAMAGE OR IF THE APPLIANCE WORKS INTERMITTENTLY OR STOPS WORKING ENTIRELY.



California Proposition 65:
(Applicable for California Residents only)
WARNING: Cancer and Reproductive Harm
www.P65Warnings.ca.gov

Do not place the appliance on a stovetop or any other heatable surface, even if stovetop is not on. Doing so is a fire hazard.



RJ38-RDO-14B_UG_LIVE_111425.indd 7 11/14/25 1:53 PM

Before First Use

1. Remove all packaging materials. Check to ensure that all parts and accessories are accounted for.
2. Read and remove any stickers on the air fryer except for the rating label, which should remain on the unit.
3. Wipe down the interior and exterior with a damp cloth. Wash the accessories with warm, soapy water; rinse and dry thoroughly.
4. Place the unit on a flat, heat-resistant surface positioned at least 2 inches away from the wall or any other objects. **CAUTION:** Never place the unit on a stovetop, even if the stove is off, as that creates a fire risk.

RJ38-RDO-14B_UG_LIVE_111425.indd 8 11/14/25 1:53 PM

Quick Start:
How to Cook in the Air Fryer+

The Air Fryer+ offers five different cook functions: **AIR FRY**, **BAKE, BROIL, REHEAT**, and **DRY** (Dehydrate), plus a rotisserie option (see p. 13). The air fryer requires no preheating and cooks faster than a traditional oven, which means you can enjoy your favorite hot foods in mere minutes. **NOTE:** On first use, the unit may emit a slight odor, which is normal and will dissipate with use.

1. Place the unit on a hard, flat surface away from all sources of heat and plug it in. Press the **Power** button to turn the unit on.
2. Place the food on the rack(s), baking pan, or rotisserie spit (see p. 13). If not using the pan, position it on the floor of the unit as a drip tray for easy cleanup.



3. Slide the food into the air fryer and close the door.

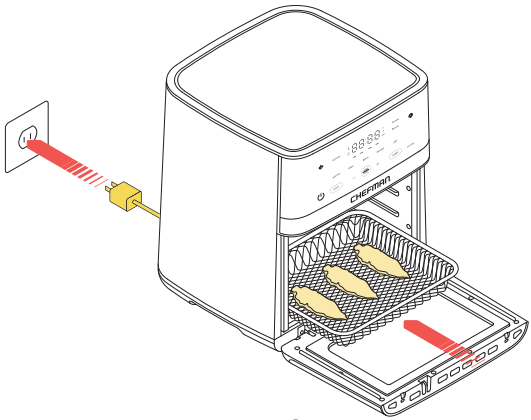

RJ38-RDO-14B_UG_LIVE_111425.indd 9 11/14/25 1:53 PM

4. Press the cook function button of your choice: **AIR FRY**, **BAKE, BROIL, REHEAT**, or **DRY** (Dehydrate). See chart on p. 12 for details on the different functions.
5. Set the desired temperature and time by pressing the + and – buttons on the display. (Use the **TIME | TEMP** button to toggle between temperature and time.)

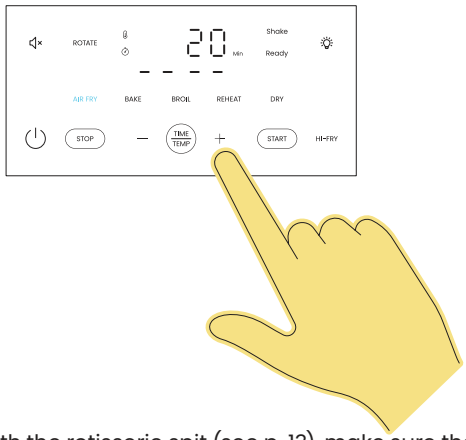

6. If cooking with the rotisserie spit (see p. 13), make sure the **ROTATE** button is selected (it should be lit blue). Otherwise, make sure it is inactive (lit in white). The rotate function may be turned off or on at any time during cooking by pressing the **ROTATE** button. **NOTE:** The **ROTATE** button is not available for **BROIL, REHEAT,** or **DRY** (Dehydrate)**.**
7. Press the **START** button to begin cooking and the timer will start counting down.

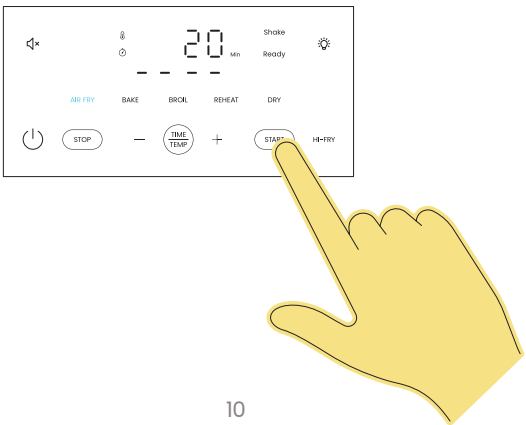

RJ38-RDO-14B_UG_LIVE_111425.indd 10 11/14/25 1:53 PM

8. If you'd like to check on foods during cooking, press the **Oven Light** button on the display and look through the window on the door. You can also open the door to check; the cooking timer will pause when the door is opened and resume when the door is closed. To stop cooking before the timer ends, press **STOP**.
9. If using the **AIR FRY** cook function (and not using the **ROTATE** feature), the **Shake** indicator light will begin blinking halfway through the cooking cycle as a reminder to flip food. Open the oven door, carefully flip food with tongs if needed, and close the door to resume. If your food does not need to be shaken or flipped, simply ignore the alert and it will turn off after 60 seconds.
10. Cook until the timer ends. The **Ready** indicator light will illuminate and cooking will stop.
11. Using oven mitts, carefully remove the rack(s) and pan. If using the spit, use the fetch tool in one hand and an oven mitt in the other to remove (see p. 15 for more detailed directions).

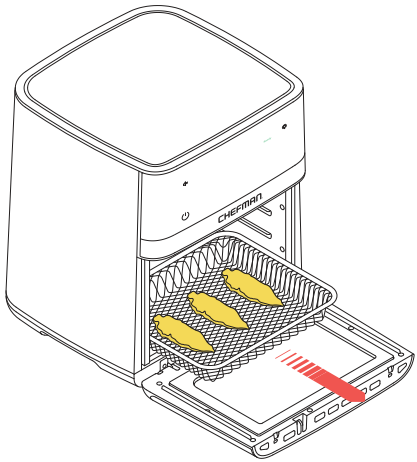

12. Check food for doneness and serve. **NOTE:** If not powered off, the unit will automatically go into sleep mode after 20 minutes of no activity. To wake the unit up, press the **Power** button.

RJ38-RDO-14B_UG_LIVE_111425.indd 11 11/14/25 1:53 PM

Cooking Functions at a Glance

Function	Default Time	Time Range	Default Temp	Temp Range	Rotate Option?	Shake Alert?*	Hi-Fry Option?
AIR FRY	15 min.	1-60 min.	400˚F (205ºC)	200˚F-450˚F (95ºC-230ºC)	Yes	Yes	Yes
BAKE	15 min.	1-60 min.	350˚F (175ºC)	200˚F-425˚F (95ºC-220ºC)	Yes	Yes	No
BROIL	10 min.	1-30 min.	350˚F (175ºC)	350˚F-450˚F (175ºC-230ºC)	No	No	No
REHEAT	5 min.	1-60 min.	375˚F (190ºC)	200˚F-425˚F (95ºC-220ºC)	No	No	No
DRY (Dehydate)	6 hours	0.5-24 hours	165˚F (75ºC)	90˚F-200˚F (30ºC-95ºC)	No	No	No

*Shake alert comes on only for cycles 6 minutes or longer when ROTATE is not activated.

SPECIAL FUNCTIONS

ROTATE

The **ROTATE** button should be used when cooking with the rotisserie spit. When selected, it will continuously rotate food 360˚ for perfect, even cooking. If not using the spit, make sure the button is deselected. The **ROTATE** button is not available for **BROIL, REHEAT,** or **DRY** (Dehydrate).

HI-FRY

Hi-Fry is a special function available only for **AIR FRY.** The **HI-FRY** button becomes illuminated during the last 2 minutes of the cooking cycle (on cycles 5 minutes or longer). When pressed, it will temporarily raise the temperature to 450˚F/230˚C for 2 minutes to give foods a little additional browning.

FAHRENHEIT/CELSIUS TOGGLE

To switch the oven display between ˚F and ˚C, press and hold the + | - button pair for 3 seconds.

RJ38-RDO-14B_UG_LIVE_111425.indd 12 11/14/25 1:53 PM

How to Use the Rotisserie Spit (Max: 4 lb)

Using the spit with the rotate feature is perfect for roasting a whole chicken to even, crisp perfection and for slowly cooking whole, boneless pieces of meat, such as beef or pork tenderloins. You can also experiment with roasting a small cauliflower head or a peeled pineapple. **NOTE:** The rotate function is not available for **BROIL, REHEAT,** or **DRY** (Dehydrate).

1. Place the baking pan on the floor of the unit.
2. If using the spit to cook a whole chicken, be sure the giblets are removed. Season the chicken as desired and truss tightly. (Be sure the chicken will fit in the oven with room to rotate; a 3 to 3½ lb chicken works well. (Trim wing tips, if possible.)
3. Run the spit through the bird lengthwise, starting at the cavity in the back.

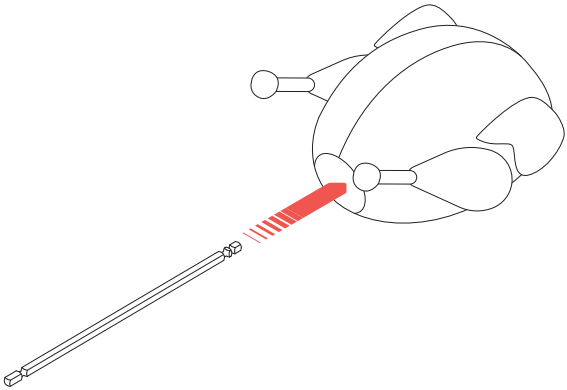

RJ38-RDO-14B_UG_LIVE_111425.indd 13 11/14/25 1:53 PM

4. Carefully slide the spit forks onto each end of the shaft, sinking them deep into the breast meat at one end and the thigh meat at the other end. Lock the forks in place with screws, leaving at least 1 inch of free space on both ends of the rod. The chicken should be secure and should not be able to slide around on the spit. Alternatively, if using the spit to cook a piece of meat, carefully push the spit lengthwise through the center of the meat. Carefully slide the spit forks onto each end of the shaft, inserting the prongs deeply into the meat. Lock the forks in place with screws, leaving at least 1 inch of free space on both ends of the rod. The meat should be secure and should not be able to slide around on the spit.

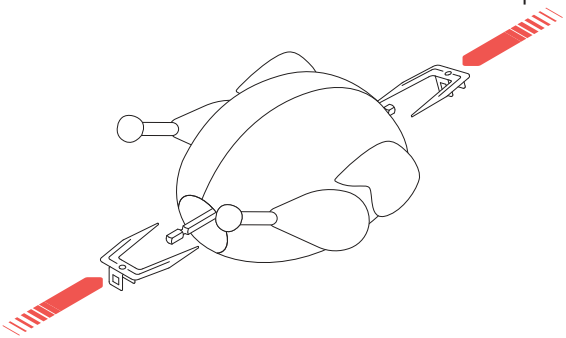

5. Guide the spit into the rotisserie rack position by placing the left shaft into the rotisserie gear located on the left interior wall. Once in place, lift the right shaft and lay it on the rotisserie holder located on the right interior wall. Be sure the meat or chicken can rotate freely in the air fryer.

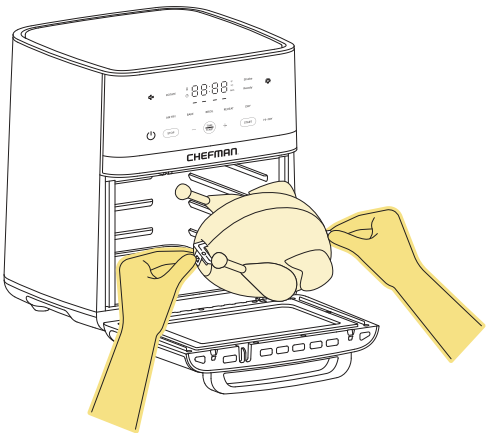

RJ38-RDO-14B_UG_LIVE_111425.indd 14 11/14/25 1:53 PM

6. Close the door and proceed with cooking following the directions on p. 10, beginning with Step 4 and choosing the **AIR FRY** or **BAKE** cook function. **CAUTION:** The spit will get hot during cooking. Use the fetch tool and oven mitts and handle with care to avoid injury (see below for more detailed directions on the fetch tool).

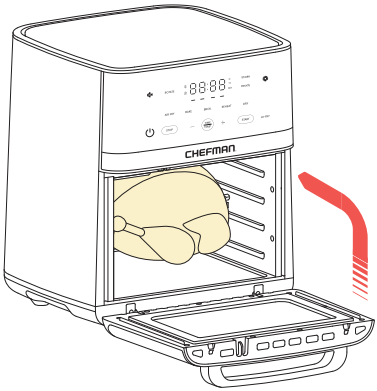

How to Use the Fetch Tool

The fetch tool is handy for removing the hot spit from the air fryer.

Hold the fetch tool by its handle with one hand. Have a potholder in (or an oven mitt on) the other hand.

Guide the fetch tool into the unit, positioning the prongs below the shafts of the rotisserie spit.

Use the tool to lift the right side of the spit from the rotisserie holder. Once it's free, lift the left side.

Carefully guide the hot spit and food from the air fryer and transfer to a heat-resistant surface.

RJ38-RDO-14B_UG_LIVE_111425.indd 15 11/14/25 1:53 PM

Cooking Charts

Use these handy charts as a guideline for using the different cook functions to prepare some of your favorite foods. The quantities suggested below allow ample room for airflow but can be adjusted. These times are averages; always check foods for doneness against current food safety guidelines before serving.

Air Fry

Frozen						
Food	**Amount/ Prep**	**Oil**	**Time**	**Temp (°F)**	**Shake/Flip**	**Rack Position**
Fries	1 lb, divided onto 2 baskets	No	18-21 min.	400	Halfway through cooking time; also swap basket position	Top/upper middle
Nuggets	1 lb, divided onto 2 baskets	No	17-20 min.	400	Halfway through cooking time; also swap basket position	Top/upper middle
Tots	2 lbs divided onto 2 baskets	No	20-25 min.	400	Halfway through cooking time; also swap basket position	Top/upper middle
Veggies						
Food	**Amount/ Prep**	**Oil**	**Time**	**Temp (°F)**	**Shake/Flip**	**Rack Position**
Asparagus	1 bunch	Yes	10-13 min.	375	Halfway through cooking time	Upper middle
Brussel Sprouts	2 lb, halved, divided onto 2 baskets	Yes	16-20 min.	375	Halfway through cooking time; also swap basket position	Upper/ lower middle
1-inch Potato Pieces	2 lb, divided onto 2 baskets	Yes	20-25 min.	400	Halfway through cooking time; also swap basket position	Upper/ lower middle

RJ38-RDO-14B_UG_LIVE_111425.indd 16 11/14/25 1:53 PM

Seafood						
Food	**Amount/ Prep**	**Oil**	**Time**	**Temp (°F)**	**Shake/Flip**	**Rack Position**
Thick Fish Fillet	2 fillets	Brush lightly	12–15 min.	375	No	Upper middle
Thin Fish Fillet	2 fillets	Brush lightly	5–8 min.	350	No	Upper middle
Shrimp	1 lb	Toss lighlty	5–8 min.	400	Halfway through cooking time	Upper middle
Meat						
Food	**Amount/ Prep**	**Oil**	**Time**	**Temp (°F)**	**Shake/Flip**	**Rack Position**
Steak	2 boneless strip steaks, 1 inch thick	No	20–25 min. (for medium)	400	Halfway through cooking time	Upper middle
Chicken Breast	2 breasts	Brush lightly	18–20 min.	375	Halfway through cooking time	Upper middle
Wings	1.5 lb, divided between 2 baskets	No	24–30 min.	400	No (but switch position of baskets)	Top/upper middle
Whole Chicken	1 chicken (3–4 lb), trussed and on spit	Brush lightly	50–60 min.	375	No (but use rotate function)	N/A

Bake

Pastry						
Food	**Amount/ Prep**	**Oil**	**Time**	**Temp (°F)**	**Shake/Flip**	**Rack Position**
1 8" round cake	16 oz batter, prepared from a store-bought mix	No	21–23 min.	350	No	Lower middle
Cookies	6 slice-and-bake cookies	No	10 min.	300	No	Lower middle
Veggies						
Food	**Amount/ Prep**	**Oil**	**Time**	**Temp (°F)**	**Shake/Flip**	**Rack Position**
Whole russet potato	2–4, poked with a fork	Brush lightly	40–45 min.	400	No	Upper middle
Whole Sweet Potato	2–4, poked with a fork	Brush lightly	35–40 min.	400	No	Upper middle

RJ38-RDO-14B_UG_LIVE_111425.indd 17 11/14/25 1:53 PM

Broil

Meat						
Food	**Amount/ Prep**	**Oil**	**Time**	**Temp (°F)**	**Shake/Flip**	**Rack Position**
Steak	2 steaks (1" thick)	Brush lightly	15-18 min. (for medium)	375	Halfway through cooking time	Upper middle
Pork Chop	2 chops (1" thick)	Brush lightly	17-20 min. (for medium)	400	Halfway through cooking time	Upper middle
Seafood						
Food	**Amount/ Prep**	**Oil**	**Time**	**Temp (°F)**	**Shake/Flip**	**Rack Position**
Thin Fish Fillet	1-2 fillets	Brush lightly	5-8 min.	400	No	Top
Thick Fish Fillet	2-4 fillets, 6 oz	Brush lightly	13-16 min.	400	No	Upper/ lower middle
Other						
Function	**Amount/ Prep**	**Oil**	**Time**	**Temp (°F)**	**Shake/Flip**	**Rack Position**
Melt		No	2-4 min.	400	No	Any

Reheat

Food	Amount/ Prep	Oil	Time	Temp (°F)	Shake/Flip	Rack Position
Pizza	1-2 slices	No	5 min.	375	No	Any
Veggies	1-4 servings	No	5-10 min.	400	No	Any
Veggies	4-6 servings	No	10-15 min.	350	No	Any
Proteins	1-2 servings	No	5-10 min.	350	Halfway through cooking time	Any
Proteins	4-6 servings	No	10-15 min.	325	Halfway through cooking time	Any

RJ38-RDO-14B_UG_LIVE_111425.indd 18 11/14/25 1:53 PM

Dry (Dehydrate)

Fruit						
Food	**Amount/ Prep**	**Oil**	**Time**	**Temp (°F)**	**Shake/Flip**	**Rack Position**
Citrus	⅛" thick slices	No	4-5 hours	165	No	Any
Apples	⅛" thick slices	No	6 hours	135	No	Any
Strawberries	¼" thick slices	No	10 hours	130	No	Any
Jerky						
Food	**Amount/ Prep**	**Oil**	**Time**	**Temp (°F)**	**Shake/Flip**	**Rack Position**
Beef	⅛–¼" thick slices	No	3 hours	165	No	Any

RJ38-RDO-14B_UG_LIVE_111425.indd 19 11/14/25 1:53 PM

Cooking Tips

- When air frying, oil foods lightly for a crisp exterior. Some foods, especially if fresh, benefit from being tossed with a little oil in a separate bowl before frying. However, high-fat foods, like a well-marbled steak, or prepared foods usually require no additional oil.
- Avoid wet batters. Loose batters, such as those used for deep frying, do not work in air fryers, as the batter simply slides off. Adapt such recipes to give foods a thicker coating, preferably including breadcrumbs to help the coating adhere.
- Use medium-high to high heat for air frying. Most foods air fry best between 375°F (190°C) and 400°F (205°C). For gentler cooking and reheating, use a lower temperature to avoid overcooking.
- Don't overcrowd the racks or pan. Too much food, especially if tightly packed, can inhibit browning and crisping. A better bet: cook food in batches.
- If using multiple wire racks, carefully switch rack positions halfway through the cooking cycle to ensure even cooking. For dehydrating, switch rack positions from top to bottom periodically.
- Check foods on the earlier side of the cooking time; you can always put the food back in to continue cooking.
- Because food sizes can vary, do not rely exclusively on recipe timing when cooking food. Check food for doneness against current safety guidelines before serving.
- If using the spit to cook a whole chicken, be sure the giblets are removed and truss tightly to ensure the chicken will fit in the oven with room to rotate; a 3 to 3½ lb chicken works well. Trim wing tips, if possible.

RJ38-RDO-14B_UG_LIVE_111425.indd 20 11/14/25 1:53 PM

Having Trouble?

Why is there white smoke coming from my unit?

White smoke can be a sign that there's too much fat in the fryer. Avoid cooking very fatty foods, such as sausages, in the air fryer, and be sure that the accessories and interior of the air fryer are clean before cooking.

Why has my food cooked unevenly?

Two culprits are likely: overcrowding and not switching rack positions. Evenly distribute foods on the rack(s) and pan. Flipping foods midway through cooking also helps. If using multiple racks, try switching rack positions at least once during cooking.

Why isn't my food crisp?

Though you can air fry with no added oil, coating foods very lightly with oil (usually just teaspoon per batch for most recipes) helps guarantee crisp results. Preheating the air fryer also helps.

RJ38-RDO-14B_UG_LIVE_111425.indd 21 11/14/25 1:53 PM

Keep It Clean

The air fryer is easy to clean and should be cleaned after each use. Follow the directions below.

1. Unplug the unit and let the unit cool completely before cleaning.
2. Wipe down the exterior and interior of the unit with a clean, damp cloth and dry thoroughly. Do not put the unit in the dishwasher or submerge it in water or any other liquid.
3. Using a sponge, soft cloth, or nylon pad, wash the glass on the door with dish soap and warm water, and dry thoroughly. Do not use a spray glass cleaner.
4. You can also remove the door completely for cleaning if needed. Hold the door open at a 45-degree angle and pull it up and away from the air fryer. Once removed, the door can be washed by hand with dish soap and warm water, or in the top rack of the dishwasher. To re-install, orient the door at the same 45-degree angle, with the "bar" portion of the door hinge resting on top of the hook portion. Press down to snap the bars securely into the hooks.
5. Wash all accessories with warm, soapy water; rinse, and dry well. All accessories are top-rack dishwasher safe.
6. Do not use abrasive cleansers, which can damage the finishes.

RJ38-RDO-14B_UG_LIVE_111425.indd 22 11/14/25 1:53 PM

Notes

RJ38-RDO-14B_UG_LIVE_111425.indd 23 11/14/25 1:53 PM

Terms & Conditions

Limited Warranty
RJ Brands, LLC d/b/a Chefman® offers a limited 1-year Warranty (the "Warranty") available on sales through authorized distributors and retailers only. Please note that this Warranty becomes valid from the date of initial retail purchase and that the Warranty is nontransferable and applies only to the original purchaser.

This Warranty is void without proof of purchase within the United States and Canada. Please be aware that this Warranty supersedes all other warranties and constitutes the entire agreement between the consumer and Chefman®. Any changes to the Terms and Conditions of this Warranty must be in writing, signed by a representative of Chefman®. No other party has the right or ability to alter or change the Terms and Conditions of this Warranty.

We may ask you to please submit, via email, photos and/or video of the issue you are experiencing. This is to help us better assess the matter and possibly offer a quick fix. Photos and/or video may also be required to determine Warranty eligibility.

We encourage you to register your product. Registering can make the Warranty process easier and can keep you informed of any updates or recalls on your product. To register, follow the directions on the Chefman® Warranty Registration page in the Chefman® User Guide. Please retain your proof of purchase even after registering. In the event that you do not have proof of your purchase date, we may declare your Warranty void or we may, at our sole discretion, apply the date of manufacture as the purchase date for purposes of this Warranty.

RJ38-RDO-14B_UG_LIVE_111425.indd 24 11/14/25 1:53 PM

What the Warranty Covers

- **Manufacturer Defects**
  Chefman® products are warranted against defects in material and workmanship, under normal household use, for a period of 1 year from the date of purchase when used in accordance with the directions listed in the Chefman® User Guide. If your product does not work as it should, please contact Customer Support at support@chefman.com so that we may assist you.

This Warranty Does Not Cover

- **Misuse**
  Damage that occurs from neglectful or improper use of products, including, but not limited to, damage that occurs as a result of usage with incompatible voltage, regardless of whether the product was used with a converter or adapter. See Safety Instructions in the Chefman® User Guide for information on proper use of product;

- **Poor Maintenance**
  General lack of proper care. We encourage you to take care of your Chefman® products so that you may continue to enjoy them. Please see Keep It Clean directions in this Chefman® User Guide for information on proper maintenance;

- **Commercial Use**
  Damage that occurs from commercial use;

- **Normal Wear and Tear**
  Damage or degradation expected to occur due to normal use over time;

- **Altered Products**
  Damage that occurs from alterations or modifications by any entity other than Chefman® such as the removal of the rating label affixed to the product;

- **Catastrophic Events**
  Damage that occurs from fire, floods, or natural disasters; or

- **Loss of Interest**
  Claims of loss of interest or enjoyment.

RJ38-RDO-14B_UG_LIVE_111425.indd 25 11/14/25 1:53 PM

For product information, please visit us at Chefman.com.

EXCEPT WHERE SUCH LIABILITY IS REQUIRED BY LAW, THIS WARRANTY DOES NOT COVER, AND CHEFMAN® SHALL NOT BE LIABLE FOR, INCIDENTAL, INDIRECT, SPECIAL, OR CONSEQUENTIAL DAMAGES, INCLUDING WITHOUT LIMITATION, DAMAGE TO, OR LOSS OF USE OF THE PRODUCT, OR LOST SALES OR PROFITS OR DELAY OR FAILURE TO PERFORM THIS WARRANTY OBLIGATION. THE REMEDIES PROVIDED HEREIN ARE THE EXCLUSIVE REMEDIES UNDER THIS WARRANTY, WHETHER BASED ON CONTRACT, TORT OR OTHERWISE.

RJ38-RDO-14B_UG_LIVE_111425.indd 26 11/14/25 1:53 PM

Warranty Registration

What do I need to register my product?

- Contact Information
- Model Number (see example below)
- Proof of Purchase (online confirmation, receipt, gift receipt)
- Date Code (see example below)
- Access Code (see example below)

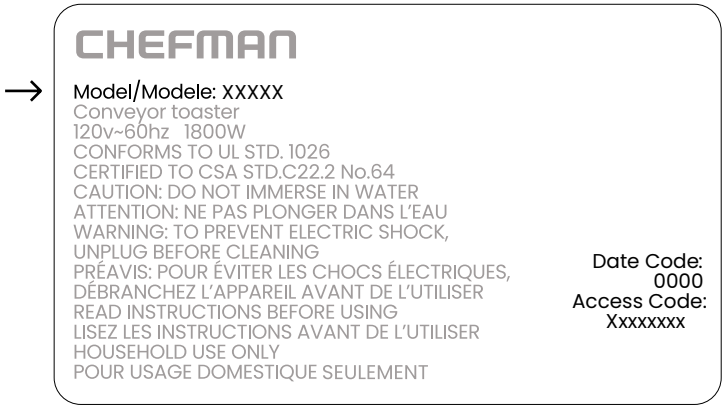

NOTE: Label depicted here is an example.
Please see label on your product for actual model/date code/access code.

How do I register my product?

All you need to do is fill out a simple Chefman® registration form.
You can easily access the form in one of the two ways listed below:

- Visit Chefman.com/register.
- Scan the QR code to the right to access site.

RJ38-RDO-14B_UG_LIVE_111425.indd 27 11/14/25 1:53 PM

CHEFMAN.

14-Quart
Multifunctional Air Fryer+

RJ38RDO14BUGIII425

Chefman® is a registered trademark of RJ Brands, LLC.