GHome
Smart

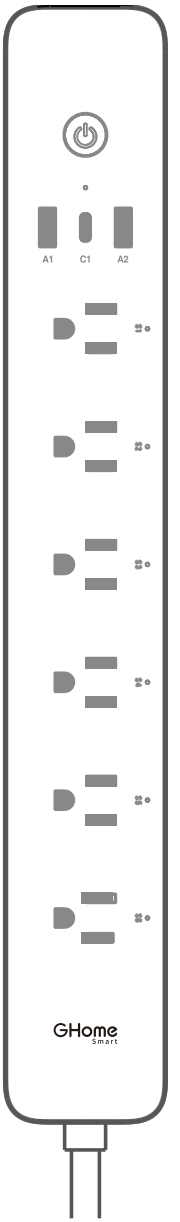

Smart Power Strip Manual

WP12

2.4G Wi-Fi Ready

5G Wi-Fi Not supported

Since the device only supports 2.4G Wi-Fi connection, please ensure that the mobile phone and the device are connected to 2.4G Wi-Fi simultaneously.

Product Overview

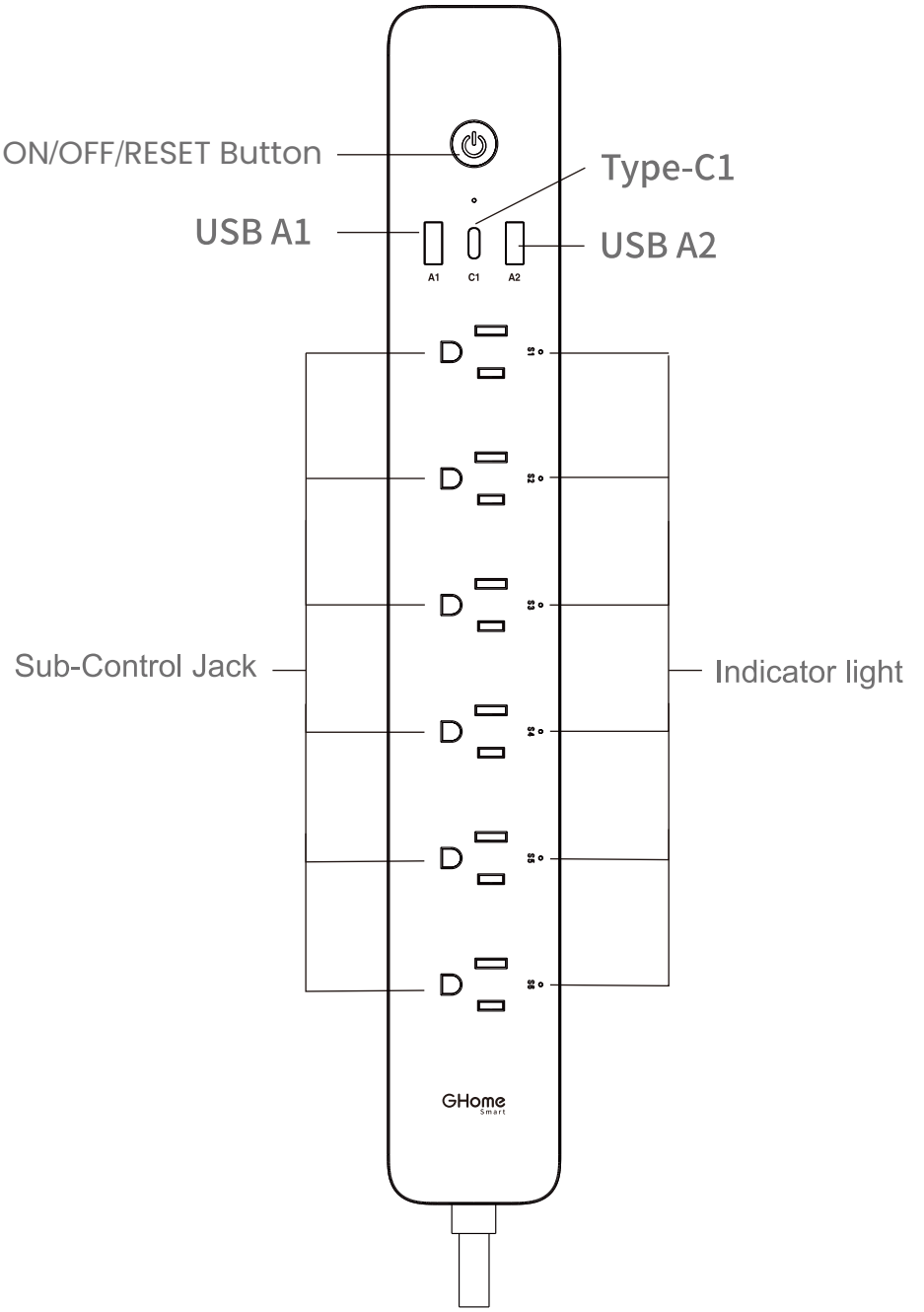

Note: ON/OFF button can also be used as a factory reset button- simply press and hold the button. Only do this if you want to erase the socket'scurrent settings.

Specification

Input:120V~50/60Hz 1800W MAX

Output:15A MAX

USB ports： 30W MAX

C1:5V⎓3A 9V⎓3A 12V⎓2.5A 15V⎓2A 30W MAX

A1/A2:5V⎓3A 9V⎓3A 12V⎓2.5A 30W MAX

A1+A2:5V⎓3A 15W MAX

A1/A2+C1:5V⎓3A 15W MAX

A1+A2+C1:5V⎓3A 15W MAX

Supported protocols:PD3.0/2.0, QC3.0+/3.0/2.0, BC1.2, AFC, FCP

Wi-Fi: 802.11 b/g/n, 2. 4GHz(only)

Operating Temp.: -10°C~35°C（14°F~95°F）

Cable Length: 1.8m/70.86inch

Main Features



Voice Control



APP Control



Schedule & Timer

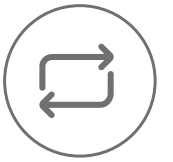

Independent Control



Energy Monitoring



Family Sharing



Group Control

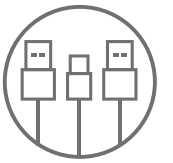

Surge Protection

How to Download the GHome App

Option 1: Search for "GHome" in the Apple APP Store or Google Play.

Option 2: Scan the QR code to enter the download page.

Note: Your phone must run iOS 11+ or Android 6.0+ for a smooth connection

How to Pair with the GHome App

1. Open the "GHome" app and create your GHome account.
2. Turn on the plug and place it near the router when pairing.
3. Hold the RESET button for 5 seconds until the button starts to blink red slowly to enter network pairing mode.
4. Connect your phone to 2.4 GHz Wi-Fi and turn on Bluetootth.
5. Tap the "+" icon in the top right corner of the home page aind select "Add Device".

You can add your device in two ways:

1) Automatic Pairing (Recommended)

1. The device will be automatically discovered by the appp.
2. Tap the device, enter your 2.4G Wi-Fi name and password, tap "Next".
3. Once the device is added successfully, tap "Done".

2) Manual Pairing (AP Mode)

If Bluetooth networking fails to discover the device:

1. Go to "Add Manually", select "WP12" under "Sockets".
2. Switch from "Bluetooth" to "Wi-Fi Mode" in the top right corner. Confirm the indicator is blinking slowly, then tap "Next".
3. Select 2.4 GHz Wi-Fi Network and enter password.
4. Connect your phone to the device hotspot "SmartLife-XXXX".
5. Return to the GHome App interface, it will automatically connect to the router, completing the configuration.

Reset

Hold the RESET button for 5 seconds until thebutton starts to blink red slowly to enter network pairing mode.

FCC WARNING

Any Changes or modifications not expressly approved by the party responsible for compliance could void the user's authority to operate the equipment.

Note: This equipment has been tested and found to comply with the limits for a Class B digital device, pursuant to part 15 of the FCC Rules.
These limits are designed to provide reasonable protection against harmful interference in a residential installation. This equipment generates uses and can radiate radio frequency energy and, if not installed and used in accordance with the instructions, may cause harmful interference to radio communications. However, there is no guarantee that interference will not occur in a particular installation. If this equipment does cause harmful interference to radio or television reception, which can be determined by turning the equipment off and on, the user is encouraged to try tocorrect the interference by one or more of the following measures:
-Reorient or relocate the receiving antenna.
-Increase the separation between the equipment and receiver.
-Connect the equipment into an outlet on a circuit different from that to which the receiver is connected. -Consult the dealer or an experienced radio/TV technician for help.
This device complies with part 15 of the FCC Rules.

(Operation is subject to the following two conditions:(1) This device may not cause harmful interference, and (2) this device must accept any interference received, including interference that may cause undesired operation.

Manufacturer: Shenzhen Cuco Smart Technology Co., Ltd.
Address: Room 201, 301, Building A, No.12 Difu Road, Guxing Community, Xixiang Street, Bao'an District, Shenzhen, 518000, Guangdong, P. R. China

Contact Information:
E-mail: service@ghomesmart.com
Tel: 1-844-394-5218 PST 9AM-5PM (Monday-Friday)
Website: https://ghomesmart.com/



Made in China

FCC ID: 2BHSG-WP12