PetSafe

Get Started!



ScoopFree® Crystal Smart Self-Cleaning Litter Box

Before we start:

As you set up your new litter box, keep in mind:

Some cats need time to adjust

While many cats take to their new and improved litter box right away, others take a little longer. Here are some tips to help you get off to a good start:

- Place the new ScoopFree® Crystal Smart Self-Cleaning Litter Box next to your cat's current litter box (trust us, you'll be able to get rid of the old one soon).
- Add a few handfuls of your cat's old litter to the crystal litter tray. You can also sprinkle a little crystal litter into your cat's old litter box.
- Let the old litter box get dirty. Most cats prefer a clean litter box and will soon be drawn to the fresh crystal litter.
- Although the ScoopFree® Crystal Smart Self-Cleaning Litter Box is quiet when running and only runs after use, in some cases it's a good idea to leave the new litter box unplugged until your kitty gets the hang of it.

Your kitten needs special care

Important: If you have a kitten, leave the litter box unplugged and scoop waste manually until she is at least 6 months old. Leave the waste trap cover off the litter box to make it easier for her to get in and out.

Staying connected with your cat is easier than ever.

What you have:

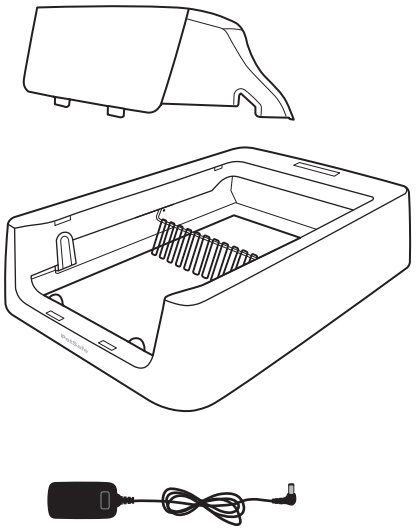

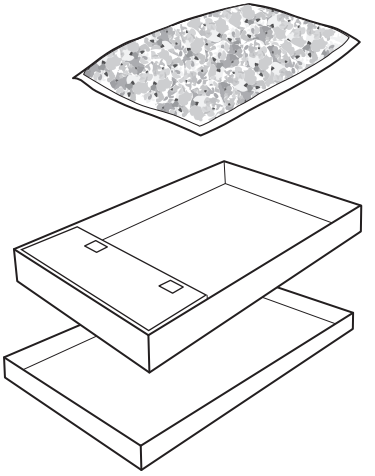

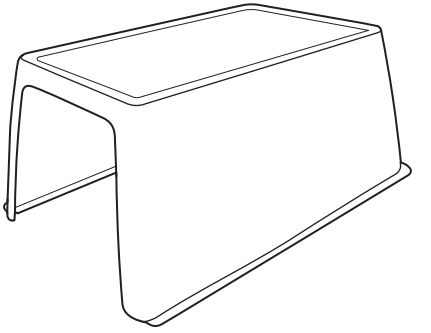

for covered litter boxes only

What you need:

- Wireless router 2.5 GHz (802.11b/g/n)
- High-speed internet connection
- Compatible Smartphone

Set up your new litter box

1

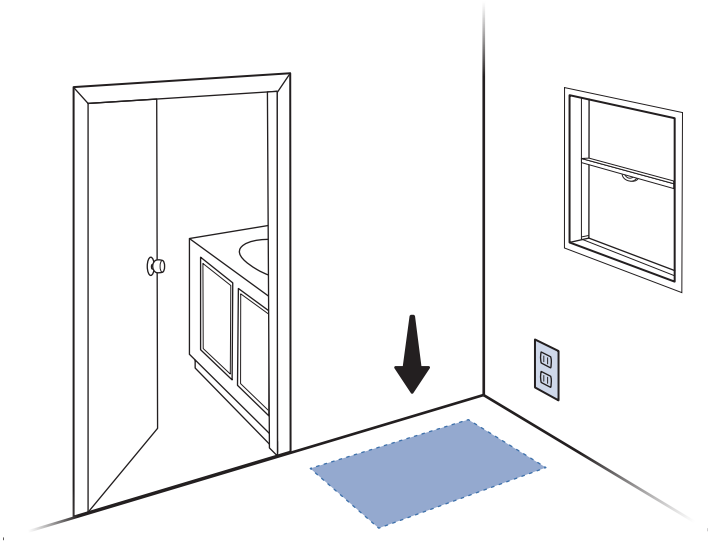

Select a location for the litter box, near a standard wall outlet.

For maximum tray life and odor control, place the litter box in a dry area with good air flow (not in a bathroom or basement).

Crystal litter controls odor by absorbing liquid from your cat's waste. Excess humidity in the air can cause the litter to become saturated more quickly, reducing the life of the crystal litter tray.

2

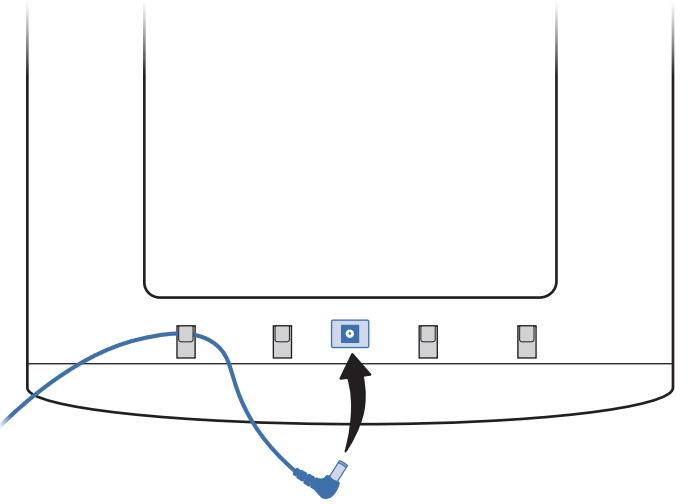

Insert the small end of the power adaptor into the socket on the bottom of the litter box frame. Slide the power adaptor cable under the clips on either side of the socket to secure it.

Do not plug the other end of the power adaptor into the wall outlet yet. You'll do this later, right before you connect to the app.

3

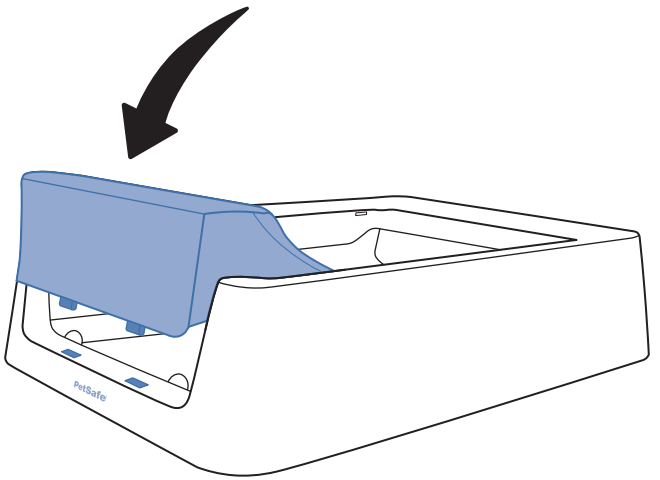

Insert the tabs on the waste trap cover into the slots at the front of the litter box frame. Press down on the waste trap cover until it snaps into place.

4

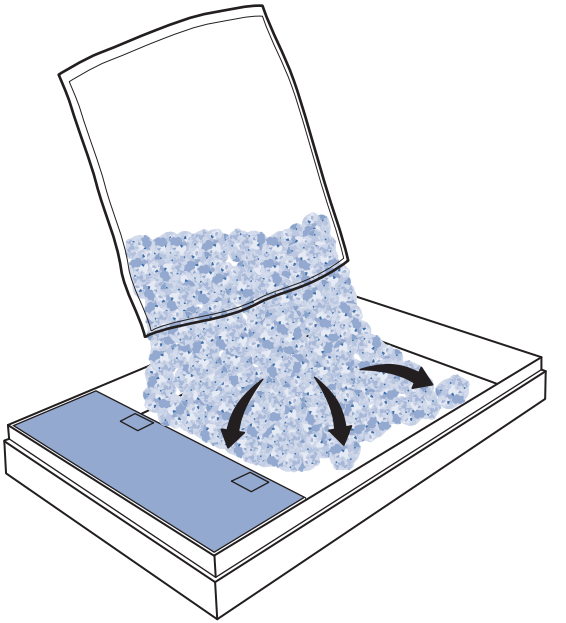

Pour the crystal litter into the litter tray and spread it evenly. Sprinkle one handful of the litter under the waste trap.

The litter tray lid is under the litter tray. You'll use this later when you change the litter tray.

5

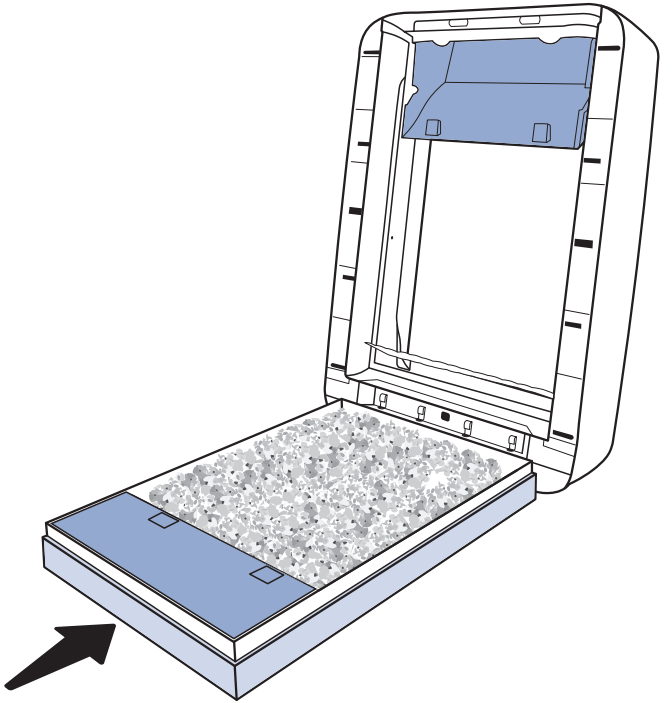

Lift the front of the litter box frame. Place the litter tray under it, making sure the waste trap on the tray is under the waste trap cover on the litter box frame

6

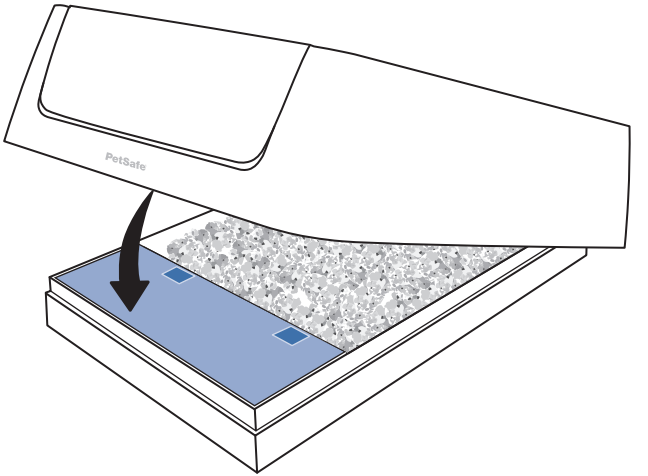

Lower the litter box frame. You'll hear a click as the magnets on the waste trap cover connect with the magnets on the litter tray.

7

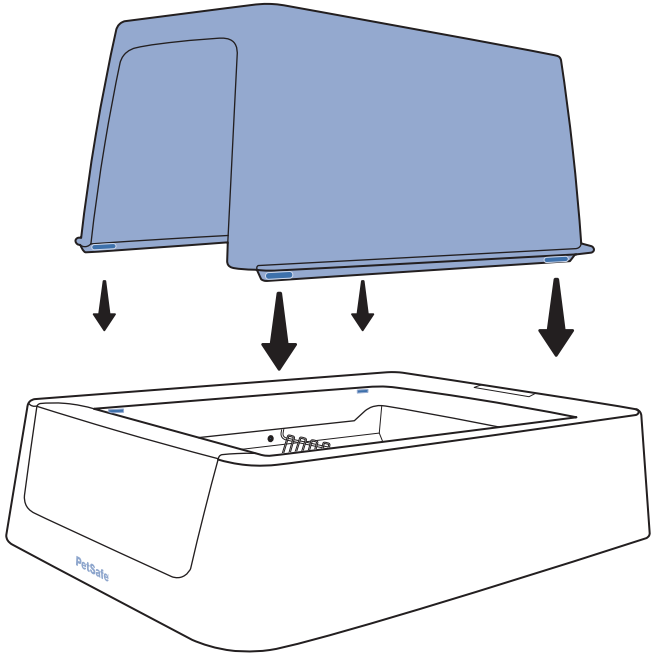

If your litter box came with a privacy cover, place it on top of the litter box, lining up the tabs at the bottom of the privacy cover with the notches in the top edge of the litter box. Press down firmly on the privacy cover to ensure all four tabs snap into place.

If your cat has not used a covered litter box before, it may help to leave the litter box uncovered until your cat is comfortable using it.

8

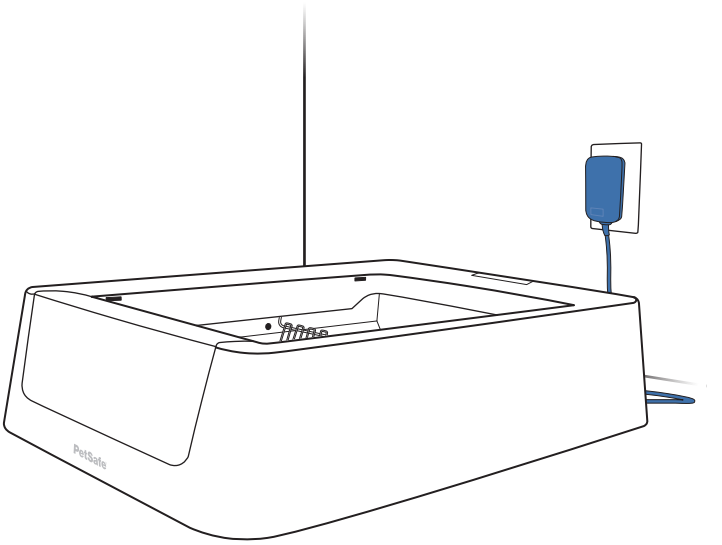

Plug the litter box power adaptor into the wall outlet. (**Important:** If you have a kitten, leave the litter box unplugged until she is at least 6 months old.)

The litter box powers on and the rake moves to the home position.

9



Download on the App Store

GET IT ON Google Play

Download the My PetSafe® app from your phone's app store, then open the app and follow the on-screen instructions to connect to your litter box. You will need a valid email address and your home Wi-Fi password.

The My PetSafe® app allows you to:

- Track your cat's use of the litter box in real time to help detect common kitty health problems.
- Remotely activate the rake to ensure a clean litter box.
- Set up customized alerts like litter tray change reminders.

Once you've connected the litter box to the app, it's ready to use. Here's how it works:

- Sensors inside the litter box recognize when your cat is present. When your cat leaves the litter box, the rake button blinks blue and the rake timer starts a 20-minute countdown. (You can change the length of this countdown in the app.)
- When the countdown is complete, the rake moves any solid waste into the waste trap. (The crystal litter will absorb any liquid waste.)
- If your cat returns to the litter box during the countdown, the rake timer stops. The rake timer resets when your cat leaves the litter box again.
- Each time the rake activates, the health counter increases by one. To reset the health counter (recommended when you change the litter tray), press and hold the health counter reset button.
- To activate the rake manually at any time, press the rake button. To pause the rake while it is in motion, press the rake button again.

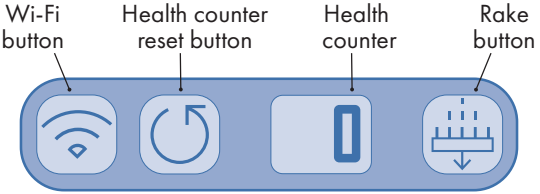

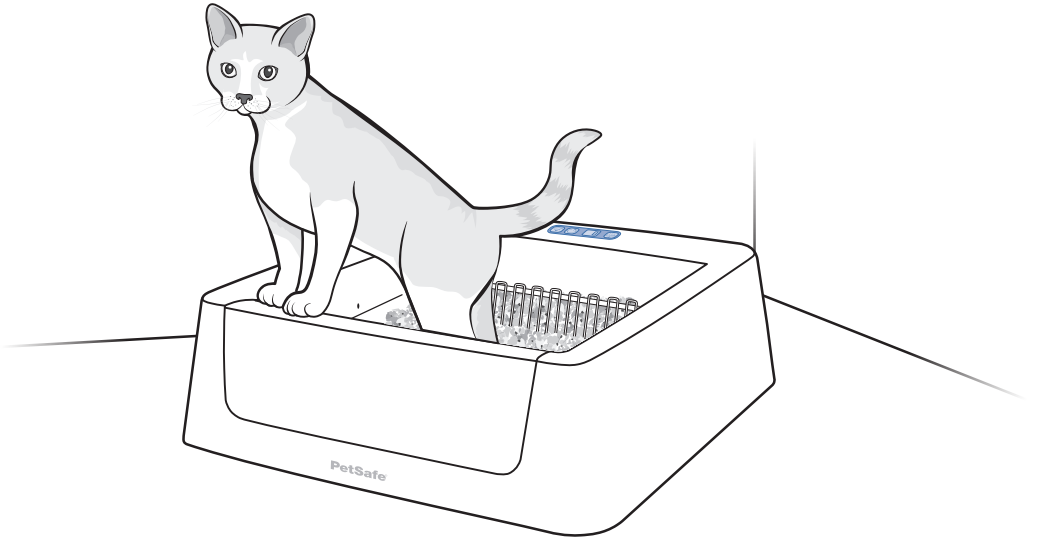

Lights on the Wi-Fi and rake buttons change color to indicate litter box status:

Button	Light color	Status
Wi-Fi button	Blue, solid	Wi-Fi is enabled and the litter box is connected to the internet.
	Blue, blinking	Wi-Fi is enabled and the litter box is trying to connect to the internet.
	Off	Wi-Fi is not enabled. To enable Wi-Fi, press and hold the Wi-Fi button for 10 seconds, or until it starts blinking yellow.
	Yellow, blinking	The litter box is ready to connect to your phone. Open the My PetSafe® app and follow the on-screen instructions to connect.
	Yellow, solid	The litter box is connected to your phone but is not yet connected to the internet.
	Red, blinking	The Wi-Fi password you entered is incorrect. Try again.
Rake button	Blue, solid	The litter box has power and is functioning normally, with the rake in the home position.
	Blue, blinking	The rake timer is counting down, or raking is currently in progress.
	Blue, fast blinking	The rake is paused. This happens if you press the rake button while the rake is in motion.
	Blue/red blinking	A mechanical error has occurred during the rake cycle. Clear any obstructions near the rake, then press the rake button. The rake should finish the cycle and return to the home position. If the error persists, the light turns solid red.
	Red, solid	Clear any obstructions near the rake and clean the sensors. If the error persists, contact our friendly team at Customer Care for assistance.

Keep the litter box fresh

An occasional cleaning is all that's needed to keep your new litter box fresh and raking reliably:

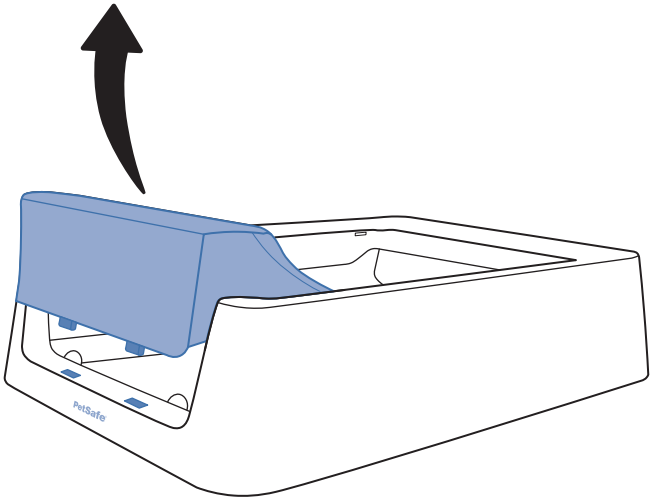

Unplug the litter box and lift it from the crystal litter tray. Pull straight up on the waste trap cover to remove it.

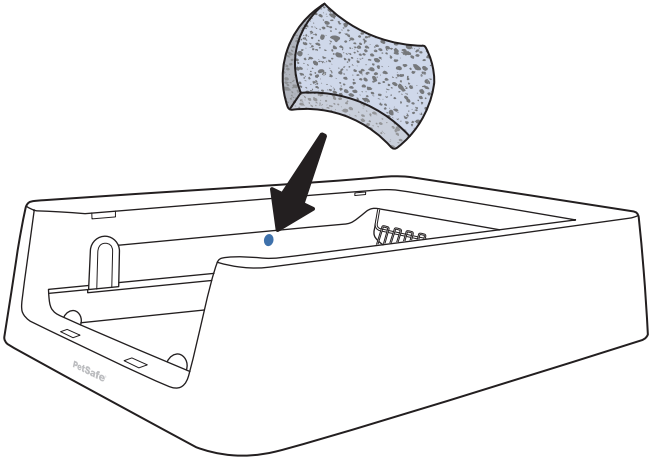

Using a cloth or sponge, mild soap, and water, wipe all surfaces of the litter box frame. Make sure the sensors inside the litter box frame are clean and unobstructed. Clean the rake with a sponge or soft brush.

Important: Do not use bleach or chemicals to clean; the odor may repel your cat.

Thoroughly dry all parts before reassembling the litter box.

Change the crystal litter tray

You can expect a litter tray to last 20-30 days for one cat, 10-15 days for two cats, and 7-10 days for three or more cats. When it's time for a change:

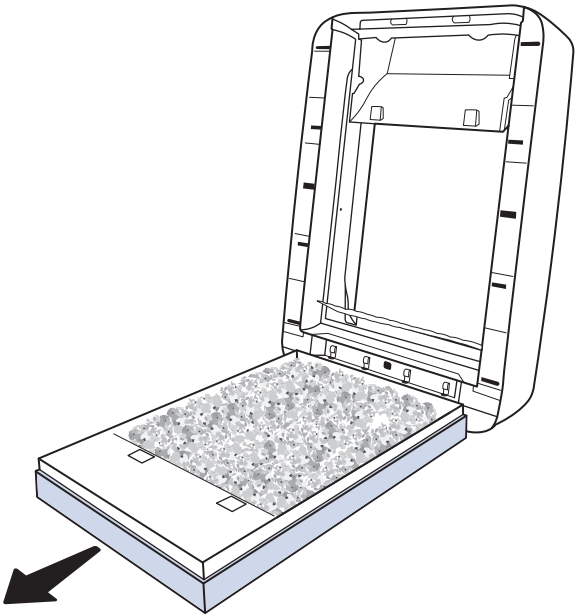

Lift the litter box frame and remove the used litter tray.

Important: See the customer care guide for safety instructions related to cat litter waste and toxoplasmosis.

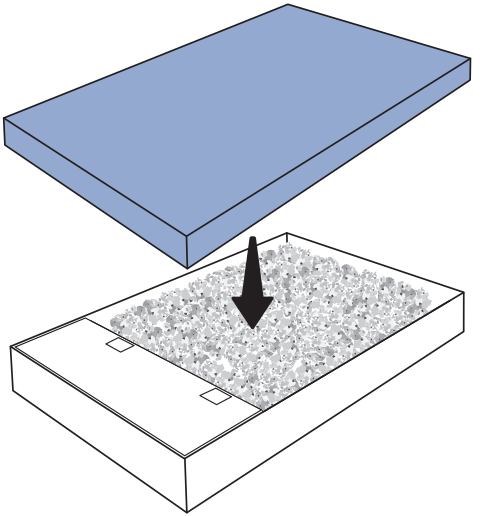

Remove the lid from under the tray and use it to cover the tray for disposal. There's no need to touch the litter.

Remember to use only PetSafe® ScoopFree® products. PetSafe® ScoopFree® litter is specially designed and pre-measured to work with PetSafe® ScoopFree® Crystal Smart Self-Cleaning Litter Boxes. Crystal litter trays are available in 1-, 3-, and 6-packs and a variety of scents (Fresh, Lavender, and Sensitive).

Never run out of litter trays

You can purchase crystal litter trays, litter mats, litter box privacy covers, and other replacement parts and accessories for your PetSafe® ScoopFree® Crystal Smart Self-Cleaning Litter Box at pet retailers, on www.petsafe.com, or by contacting our Customer Care Center.

For added savings and convenience, consider signing up for a crystal litter tray home delivery subscription on our website or through our Customer Care Center. With a subscription, you'll save money on each litter tray, which will be automatically delivered to your door as frequently as you choose.



We're here to help!

For questions or additional tips:
support.petsafe.com

1-Year Limited Warranty | ©2023 Radio Systems Corporation | Models: PAL00-16807, PAL00-16808 | 400-2497/2
For important safety instructions, please see the customer care guide.