VEVOR®

TOUGH TOOLS, HALF PRICE

Technical Support and E-Warranty Certificate www.vevor.com/support

ADJUSTABLE OPEN FRAME SERVER RACK USER MANUAL

We continue to be committed to provide you tools with competitive price.
"Save Half", "Half Price" or any other similar expressions used by us only represents an estimate of savings you might benefit from buying certain tools with us compared to the major top brands and doses not necessarily mean to cover all categories of tools offered by us. You are kindly reminded to verify carefully when you are placing an order with us if you are actually saving half in comparison with the top major brands.

VEVOR®

TOUGH TOOLS, HALF PRICE

ADJUSTABLE OPEN FRAM SERVER RACK

THIS MANUAL APPLIES TO THE FOLLOWING SKUS:		
HT-W6412	HT-W6415	HT-W6420

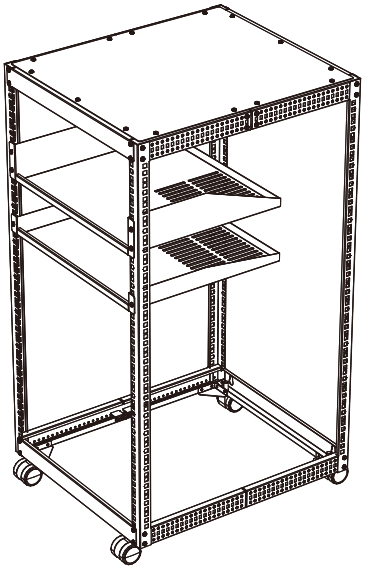

NEED HELP? CONTACT US!

Have product questions? Need technical support? Please feel free to contact us:

CustomerService@vevor.com

This is the original instruction, please read all manual instructions carefully before operating. VEVOR reserves a clear interpretation of our user manual. The appearance of the product shall be subject to the product you received. Please forgive us that we won't inform you again if there are any technology or software updates on our product.

Thank you for purchasing the Performance Series Wall Mount Cabinet from VEVOR.
Every effort has been made to ensure the accuracy of the information in this product manual.

COMPLIANCE STATEMENTS

Use of Trademarks,Registered Trademarks, and other Protected Names and Symbols

This manual may make reference to trademarks, registered trademarks,and other protected names and/or symbols of third-party companies not related in any way to vevor. Where they occur these references are for illustrative purposes only and do not represent an endorsement of a product or service by vevor, or an endorsement of the product(s)to which this manual applies by the third-party company in question. Regardless of any direct acknowledgment elsewhere in the body of this document, vevor hereby acknowledges that all trademarks, registered trademarks,service marks, and other protected names and/or symbols contained in this manual and related documents are the property of their respective holders.

WARNING STATEMENTS

- Make sure that you assemble this product according to the instructions.
- Do not exceed the weight capacity of this product. Overloading this product might result in injury or property damage. This product can support the following weight: Ground-mounted load-bearing: 200lb, Wall-mounted load-bearing: 100lb.
- This product is intended for indoor use only and should not be used outdoors.
- This enclosure is extremely heavy. Never attempt to move or lift this

enclosure without assistance.

- Tipping hazard! Extending multiple components from this enclosure increases the chance that the enclosure will tip over. To avoid this risk, do not extend more than one component from the enclosure.
- Do not place any items on this enclosure and do not stack the enclosure on top of another enclosure.
- Keep liquid away from this enclosure.
- Make sure that you install the enclosure in an area that can handle the combined weight of the enclosure and the equipment that you intend to place inside of the enclosure.
- This product requires an earth-ground connection. Do not use this product without an earth-ground connection.

PRODUCT DIAGRAM

Expanded View

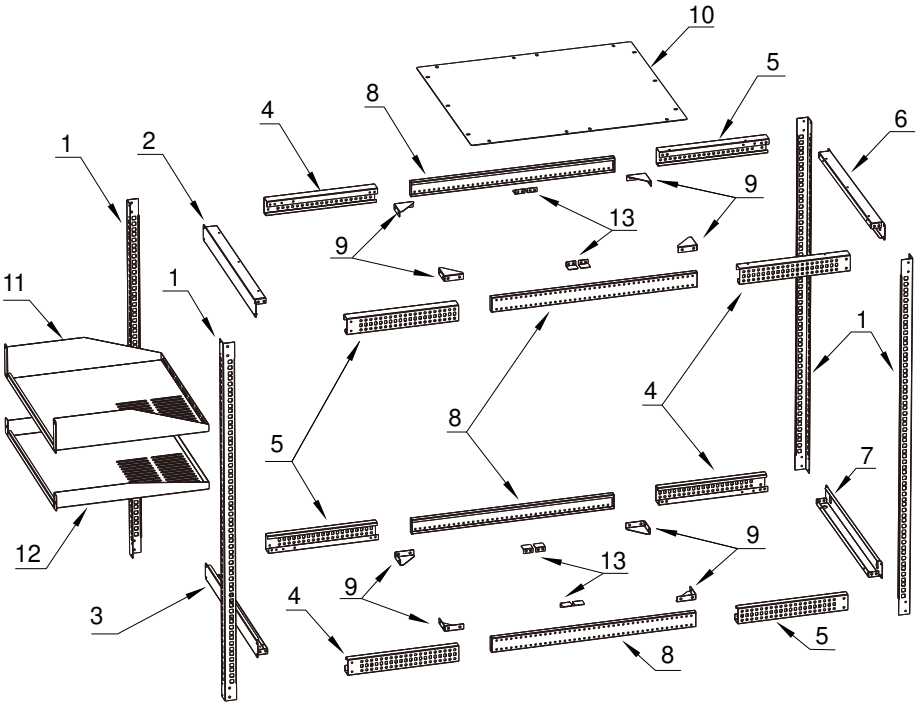

1	Vertical Rails (x 4)	8	Center Sections (x 4)
2	Left upper Bracket (x 1)	9	Corner piece (x 8)
3	Left lower Bracket (x 1)	10	Top panel (x 1)
4	Left corner Brackets (x 4)	11	Top Pallet (x 1)
5	Right corner Brackets (x 4)	12	Bottom Pallet (x 1)
6	Righ upper Bracket (x 1)	13	Limit parts (x 8)
7	Righ lower Bracket (x 1)	14	Expansion bolts (x 4)

To view manuals, videos, drivers, downloads, technical drawings, and more visit www.vevor

PACKAGE CONTENTS

① 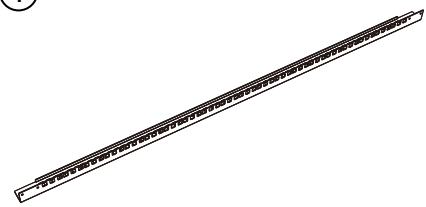 Vertical Rails Qty: 4	② 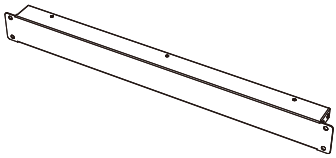 Left Upper Bracket Qty: 1
③ 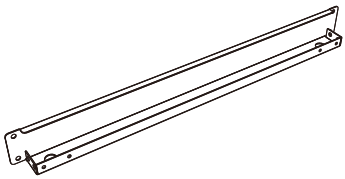 Left Lower Bracket Qty: 1	④ 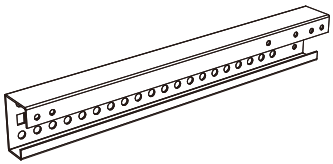 Left Corner Brackets Qty: 4

⑤ 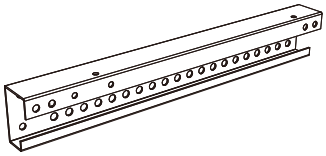 Right Corner Brackets Qty: 4	⑥ 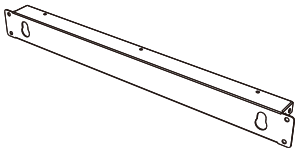 Right Upper Bracket Qty: 1
⑦ 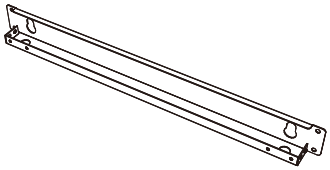 Right Lower Bracket Qty: 1	⑧ 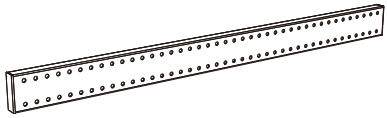 Center Sections Qty: 4
⑨ 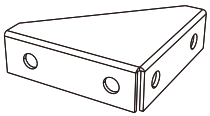 Corner Piece Qty: 8	⑩ 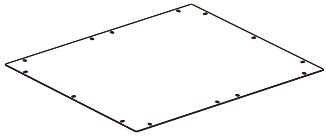 Top Panel Qty: 1
⑪ 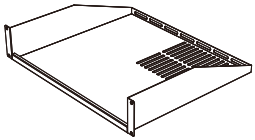 Top Pallet Qty: 1	⑫ 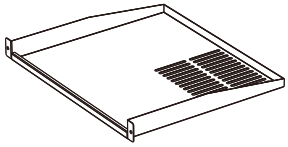 Bottom Palle Qty: 1
⑬ 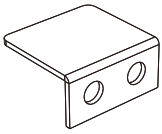 Limit Parts Qty: 8	⑭ 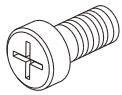 M5*10 Cross Head Screw Qty: 145

⑮ 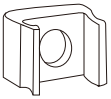 M6 Cage Nuts Qty: 10	⑯ 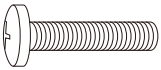 M6*12 Cross Head Screw Qty: 10
⑰ 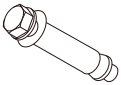 Expansion bolts Qty: 4	

REQUIREMENTS

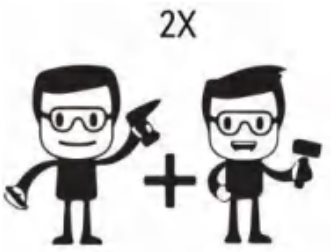



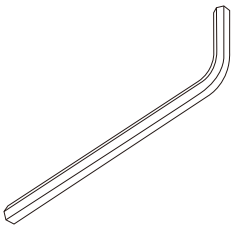



- Electric screwdriver (sold separately)
- Two People (for assembly)
- Earth Ground Connection
- Allen key

INSTALLATIO

Note: Two people are required for the Rack assembly.

Adjust the torque of the electric screwdriver to 10

Set the Mounting Depth

1. Align the Left corner Brackets(#4)and the Right corner Brackets(#4) with the Center Sections(#8),slide the Corner Brackets overtop of the Center Sections.(Figure 1)

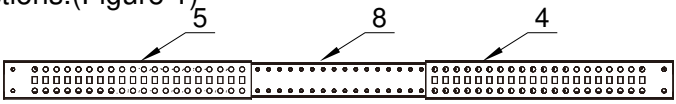

Figure 1

2. Determine the maximum required mounting depth for the Rack Mountable Equipment.

3. Slide the Left corner Brackets and the Right corner Brackets,inward along the Center Sections,and align the Center Sections with the hole on the Left corner Brackets and the Right corner Brackets.(Figure 2)

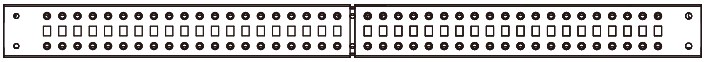

Figure 2

4. Insert M5*10 Cross head screws through into the holes in the Corner Brackets and Center Sections. (Figure 3)

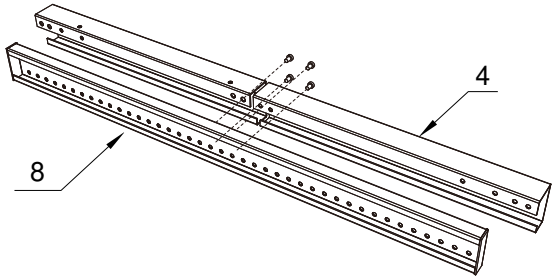

Figure 3

5. Tighten the M5*10 Cross head screws on the Centre Section Assembly using Electric screwdriver.

6. Place two Limit parts(#13) on Corner Brackets,Tighten the M5*10 Cross head screws using Electric screwdriver. (Figure 4)

7.Repeat the above steps and assemble other 4 center section

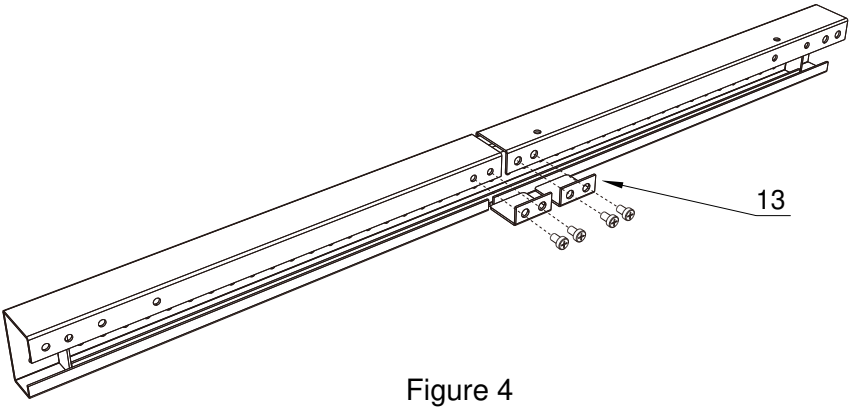

Figure 4

Assemble the Rack

1. Place Vertical Rails (#1) on Center Section Assembly, Secure with the M5*10 Cross head screws.(Figure 5)

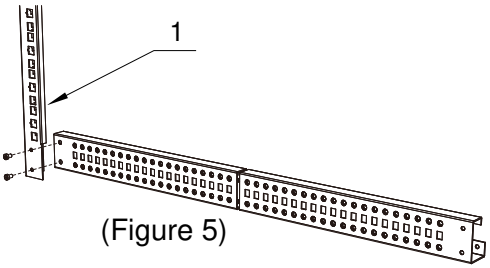

(Figure 5)

2. Place Vertical Rails (#1) on The other end of Center Section Assembly, Secure with the M5*10 Cross head screws.(Figure 6)

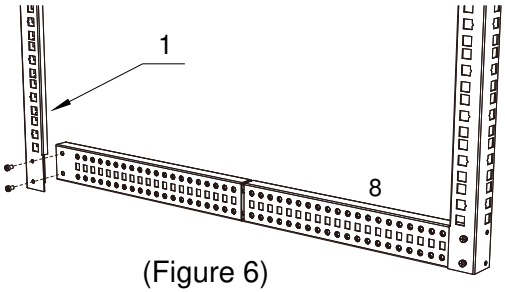

(Figure 6)

3. Insert one Center Section Assembly between the Top of the two Vertical Rails.Ensure the holes in the ends of the Center Section Assembly align with the holes in the Top of the two Vertical Rails.
4. Tighten the M5*10 Cross head screws on the Vertical Rails using Electric screwdriver.

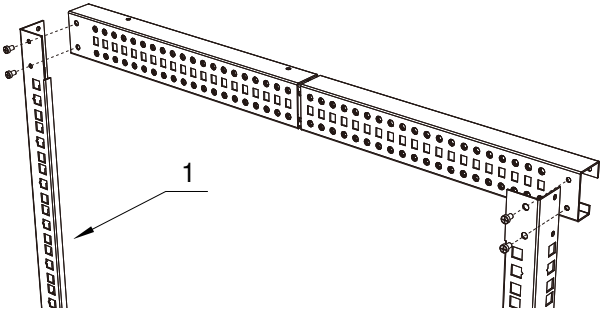

5. Repeat the above steps and Assemble another half-frame.

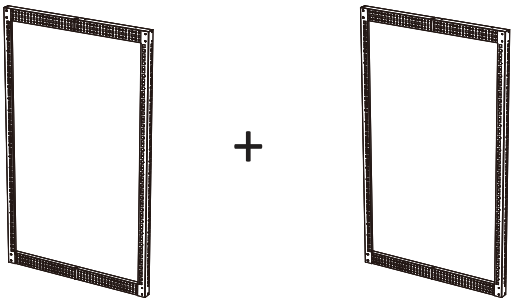

6. Place Left lower Bracket （#3）between the Half-frame Assembly, align the
two holes in the Vertical Rail and Left lower Bracket.
7. Tighten the M5*10 Cross head screws on the Left lower Bracket using Electric screwdriver.

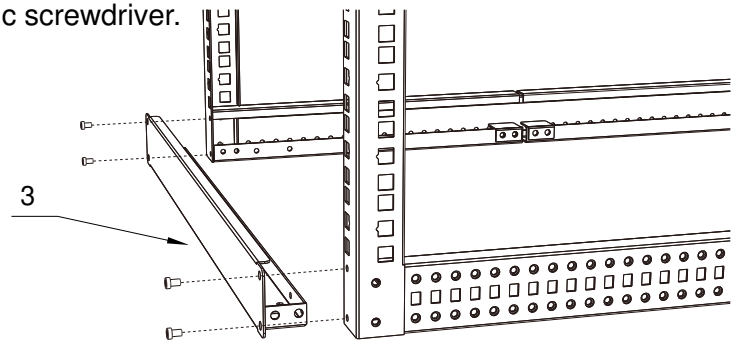

8. Place Left upper Bracket (#2) between the Half-frame Assembly, align the two holes in the Vertical Rail and Left upper Bracket.
9. Tighten the M5*10 Cross head screws on the Left upper Bracket using Electric screwdriver.

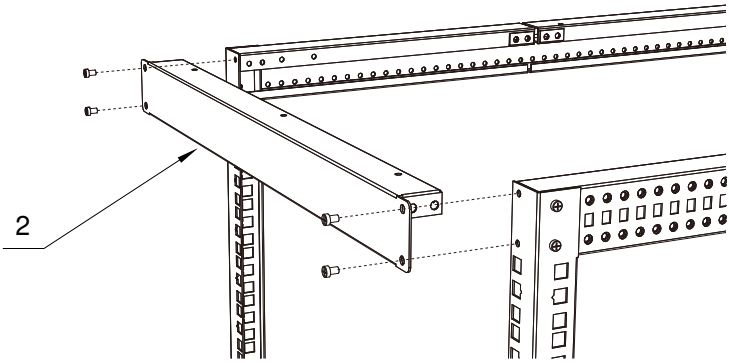

10. Place Righ lower Bracket (#7) between the Half-frame Assembly, align the two holes in the Vertical Rail and Right lower Bracket.
11. Tighten the M5*10 Cross head screws on the Right lower Bracket using Electric screwdriver.

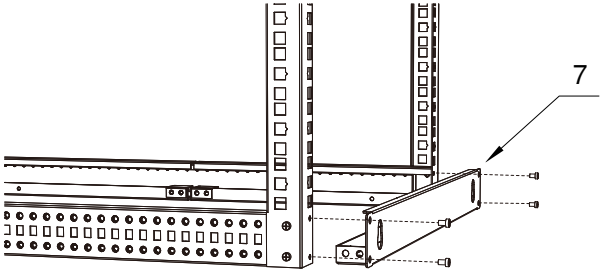

12. Place Right upper Bracket (#6) between the Half-frame Assembly, align the two holes in the Vertical Rail and Right upper Bracket.
13. Tighten the M5*10 Cross head screws on the Right upper Bracket using Electric screwdriver.

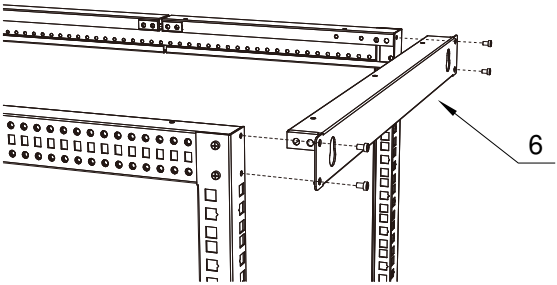

14. Place Corner piece (#9) on Center Section Assembly and lower Bracket(or upper Bracket).There are 8 locations that need to be installed
15. Tighten the M5*10 Cross head screws on the Corner piece using Electric screwdriver.

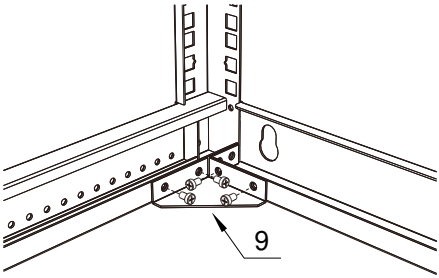

16. Place Top Pallet (#1) and Bottom Pallet (#2) on the Enclosure.
17. Tighten the M6 Cage Nuts and M6*12 Cross hex head screws on the Corner piece using allen key

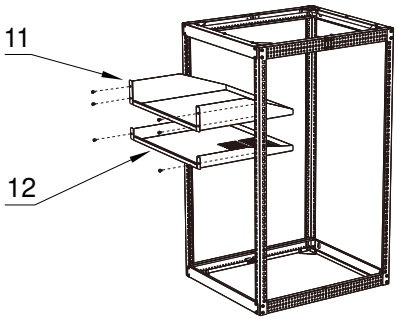

18. Place Top panel (#10) on the Enclosure.
19. Tighten the M5*10 Cross head screws on the Top panel using Electric screwdriver.

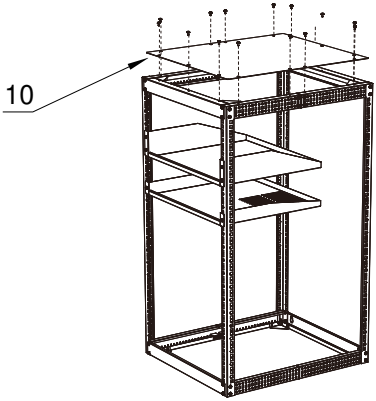

Ground the Rack

1. Insert an M6 Screw through the Grounding Point on the Grounding Wire and into the Ground Hole located on the bottom of the Rack.
2. Run the Grounding Wire under the Rack's Frame.
3. Connect the Grounding Wire to an Earth Ground Connection.

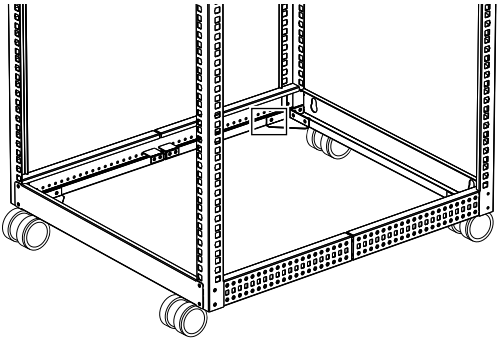

LIMITATION OF LIABILITY

In no event shall the liability of vevor (or their officers,directors,employees or agents)for any damages(whether direct or indirect, special, punitive, incidental, consequential, or otherwise), loss of profits, loss of business,or any pecuniary loss, arising out of or related to the use of the product exceed the actual price paid for the product.

Some states do not allow the exclusion or limitation of incidental or consequential damages. If such laws apply, the limitations or exclusions contained in this statement may not apply to you.

PRODUCT PARAMETER

Name	Adjustable	Open Frame Server Rack	
Model	HT-W6412	HT-W6415	HT-W6420
Adjustable Depth	15”-40”	15”-40”	15”-40”
Installation Width Standard	19"		
Height	12U	15U	20U
Ground-Mounted Load-Bearing	200 lbs		
Wall-Mounted Load-Bearing	100 lbs		
Product Size	585*510*626mm	585*510*759mm	585*510*982mm
Package Size	710*610*170mm	840*610*170mm	1050*610*170mm
Weight	N.W.: 14.15Kg G.W.: 17.35Kg	N.W.: 14.45Kg G.W.: 17.95Kg	N.W.: 14.95Kg G.W.: 18.75Kg

Address: Baoshanqu Shuangchenglu 803long 11hao 1602A-1609shi Shanghai

Imported to USA: VEVOR STORE INC, 9448 RINCHMOND PL #E RANCHO CUCAMONGA, California, 91730 United States of America

Made In China

VEVOR®

TOUGH TOOLS, HALF PRICE

Technical Support and E-Warranty Certificate

www.vevor.com/support