66882
Rev 02

ENGLISH

264 Contemporary Electronic Deadbolt

Installation and User Guide

Required tools

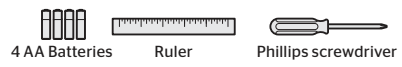

Additional Tools (depending on application)



Kwikset Technical Support
1-800-327-5625
www.kwikset.com

Parts in the box

Latch 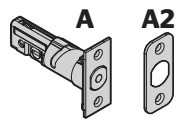	Drive-In Collar 	Strike 	Cylinder 
Exterior Assembly 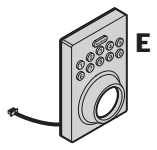	Keys 	Mounting Plate 	Interior Assembly 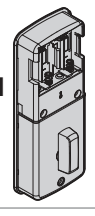
Interior Cover 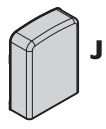	Latch and Strike Screws 	Interior Assembly Screws 	Mounting Plate Screws 

1 Prepare the door and check dimensions

If drilling a new door, use the supplied template and the complete door drilling instructions available at www.kwikset.com/doorprep

A Measure to confirm that the hole in the door is either 2-1/8" (54 mm) or 1-1/2" (38 mm).

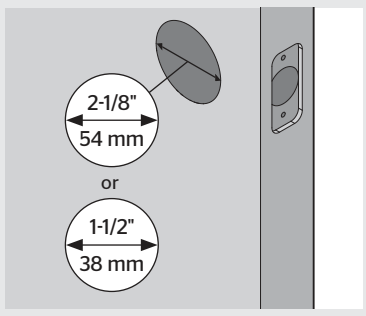

B Measure to confirm that the backset is either 2-3/8" or 2-3/4" (60 or 70 mm).

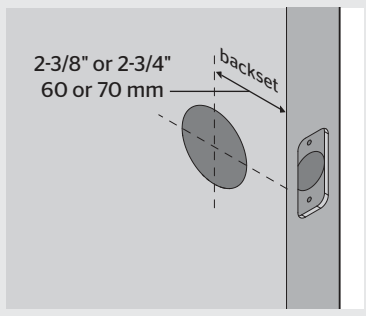

C Measure to confirm that the hole in the door edge is 1" (25 mm).

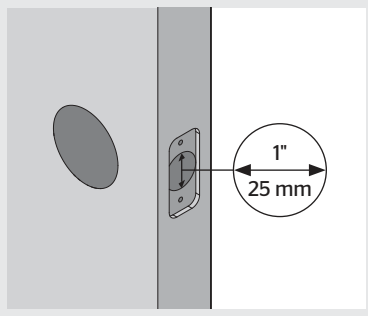

D Measure to confirm that the door is either 1-3/8" or 1-3/4" (35 mm or 44 mm) thick.

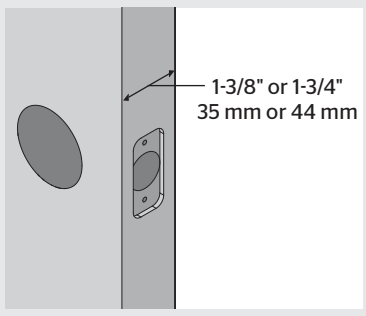

Note: Additional door preparation may be required for doors with 1-1/2" (38 mm) holes. Consult the deadbolt drilling instructions at www.kwikset.com/doorprep

2 Install the latch and strike

A Hold the latch in front of the door hole, with the latch face flush against the door edge.

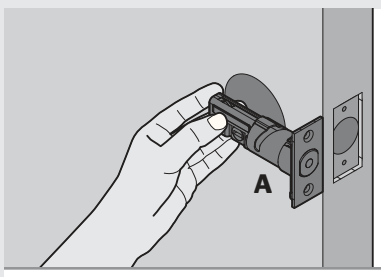

Is the slotted hole centered in the door hole?

YES

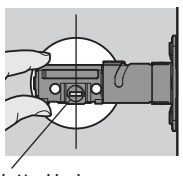

slotted hole is centered

No adjustment is required. Proceed to next step.

NO

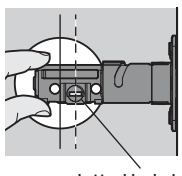

slotted hole is NOT centered

Rotate latch face as shown to extend latch.

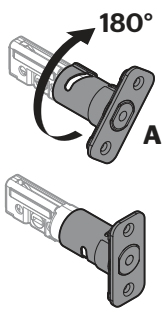

B Is the door edge chiseled?

YES

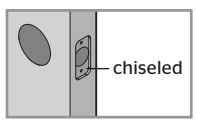

Install latch in door with supplied screws.

NO

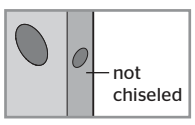

Use a flathead screwdriver to lift tabs on collar of rectangular face to remove it from latch. Install drive-in collar.

Optional: Remove square corner face and replace with round corner face (if needed).

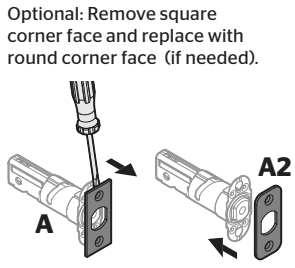

Ensure A2 snaps into place.

Install latch in door with supplied screws.

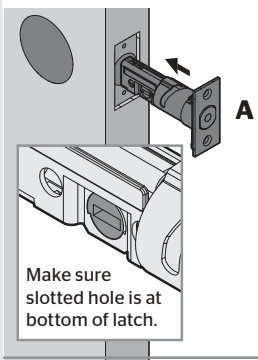

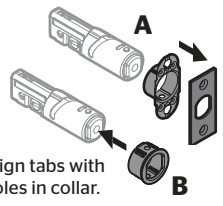

Align tabs with holes in collar.

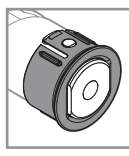

Ensure collar snaps into place.

Pull collar to test for tight fit.

Install latch in door with wood block and hammer.

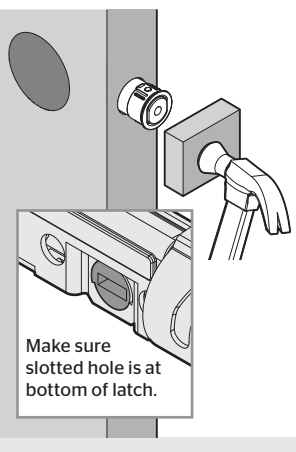

C Install strike on the door frame.

⚠ Make sure hole in door frame is drilled a minimum of 1" (25 mm) deep.

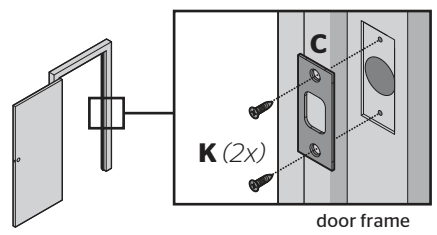

D ⚠ **IMPORTANT:** Make sure the latch bolt is fully retracted (in the unlocked position).

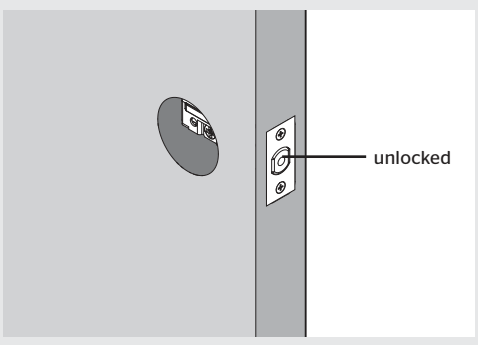

3 Prepare keypad and mounting plate (only for doors with smaller holes)

What is the diameter of the hole in the door?

Diameter is 2-1/8" (54 mm)

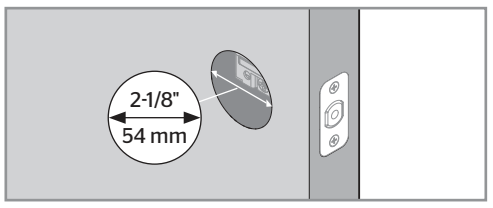

No adjustment is required.
Proceed to step 4.

or

Diameter is 1-1/2" (38 mm)

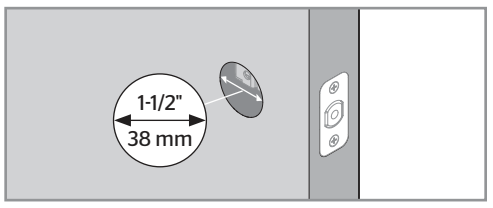

A Remove adapter ring from exterior assembly:

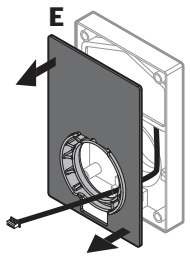

1. Remove gasket.

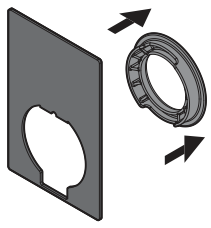

2. Remove adapter ring from gasket.

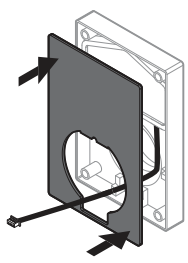

3. Reinstall gasket, ensuring tight seal.

B Use pliers to remove two tabs from mounting plate:

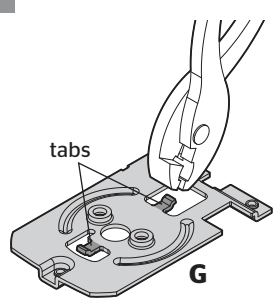

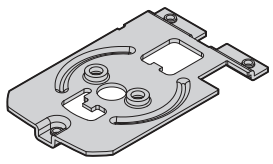

4 Install exterior assembly

A Install the cylinder into the exterior assembly.

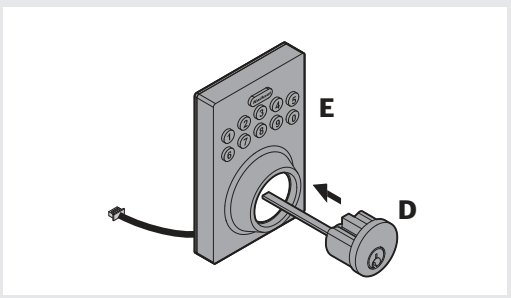

B Route the cable below the latch.

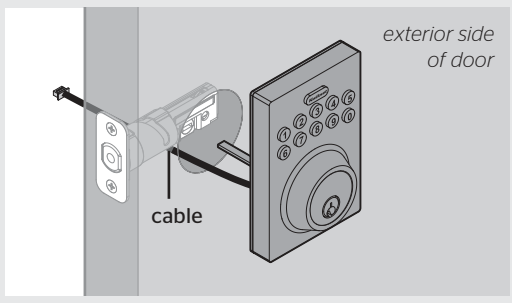

C **IMPORTANT:** Make sure the latch is fully retracted (in the unlocked position).

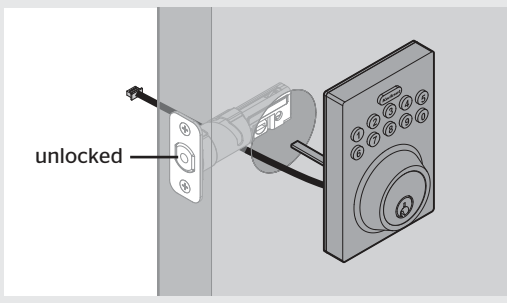

D **IMPORTANT:** Make sure the torque blade is in the horizontal position.

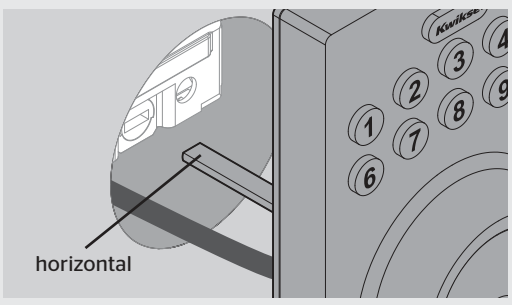

E Insert the torque blade through the horizontal slot in the latch.

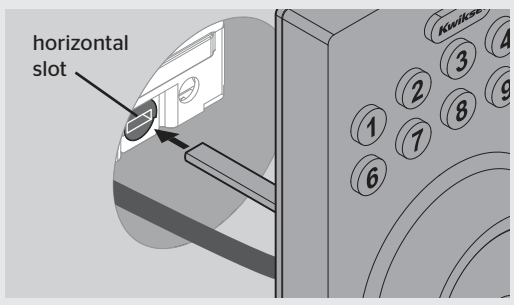

F Push the torque blade through the center hole in the mounting plate and send the cable through the bottom hole.

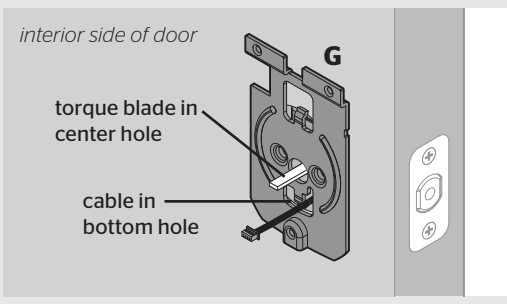

G Secure the mounting plate with the supplied screws.

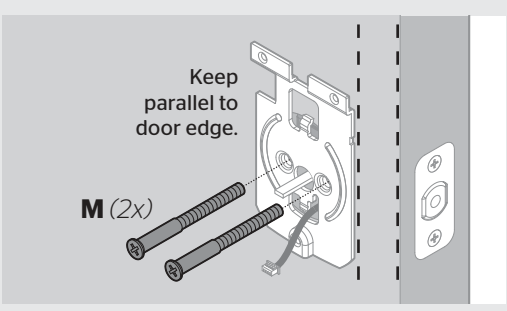

H Insert the key and test the latch for smooth operation.

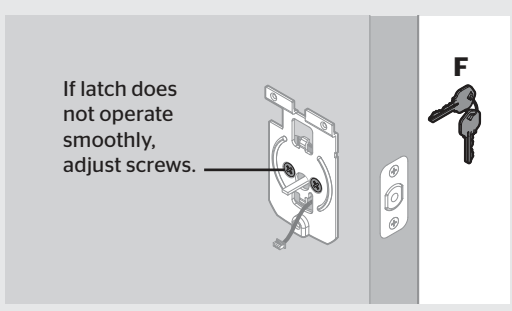

I Remove the key and make sure the latch bolt is still in the unlocked position.

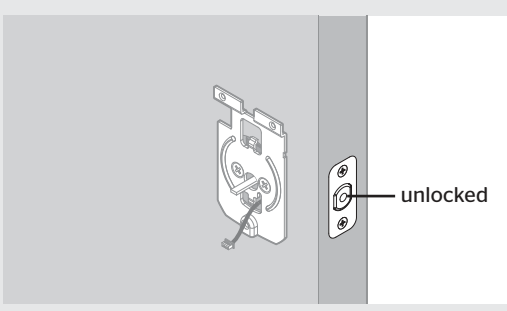

5 Install interior assembly

A Remove the battery cover.

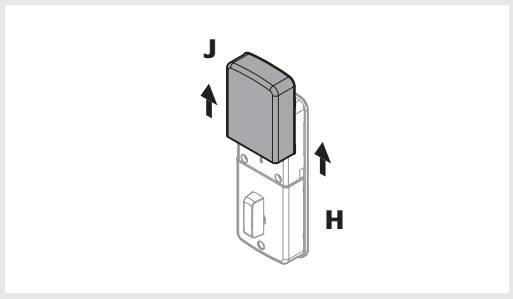

B Load 4 AA batteries into the interior assembly. For best results, use new, non-rechargeable Alkaline batteries only.

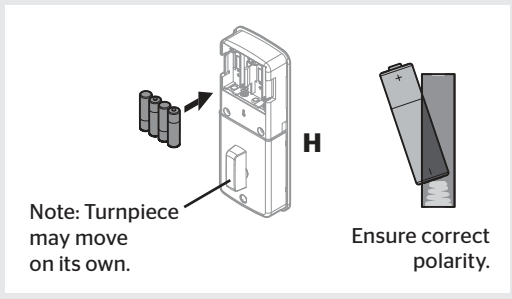

C Press and hold the Reset button on the interior assembly for 5 seconds, until you hear 3 long beeps.

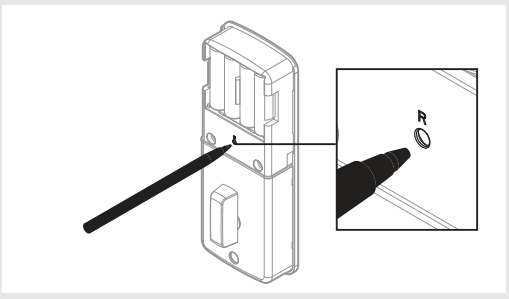

D Align the colored edges of the connectors and ensure a tight cable connection.

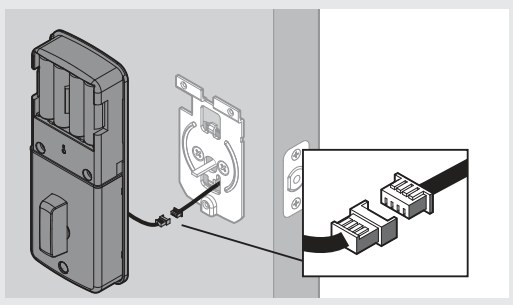

E ⚠ **IMPORTANT:** Rotate the turnpiece AWAY from the door edge and make sure the latch is fully retracted (in the unlocked position).

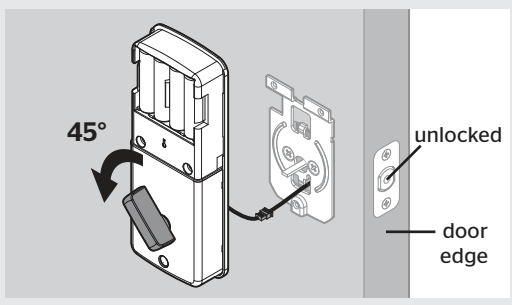

F Make sure the torque blade is still in the horizontal position and install the interior assembly.

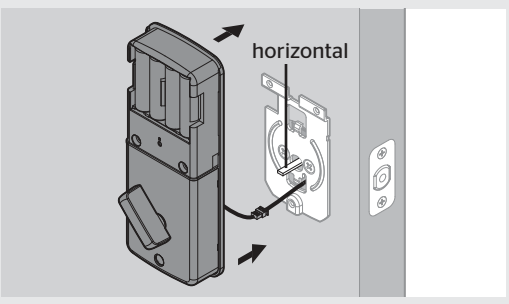

G Test the turnpiece for smooth rotation.

If turnpiece doesn't rotate, repeat steps 5E and 5F, making sure to rotate the turnpiece AWAY from the door edge.

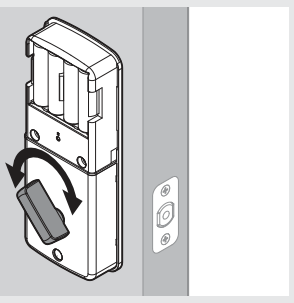

H Secure the interior assembly with the supplied screws.

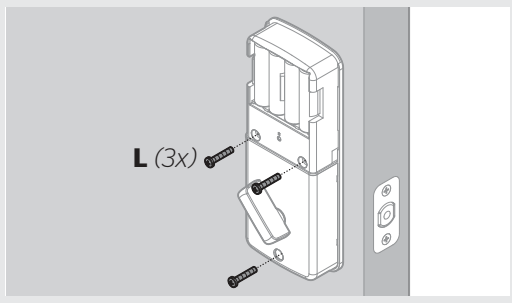

I Reinstall battery cover and make sure the latch is still in the unlocked position.

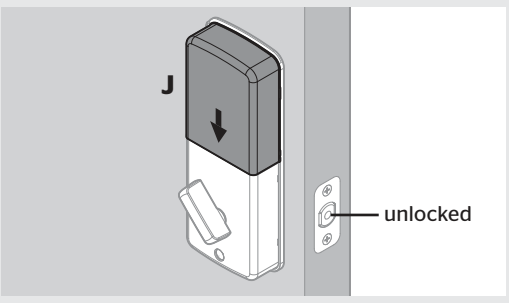

6 Set locking and unlocking direction

A While the door is OPEN and UNLOCKED, enter the following code to teach the lock the orientation of the door:

This is your default Programming Code.

1. Press 0-0-0-0.
2. Press **Kwikset**. You will hear one beep.
3. Press 0.
4. Press **Kwikset**.

Note: The keypad will light up in blue when pressed.



B The latch bolt will extend and retract. The lock will beep and the **Kwikset** button will turn green or red.

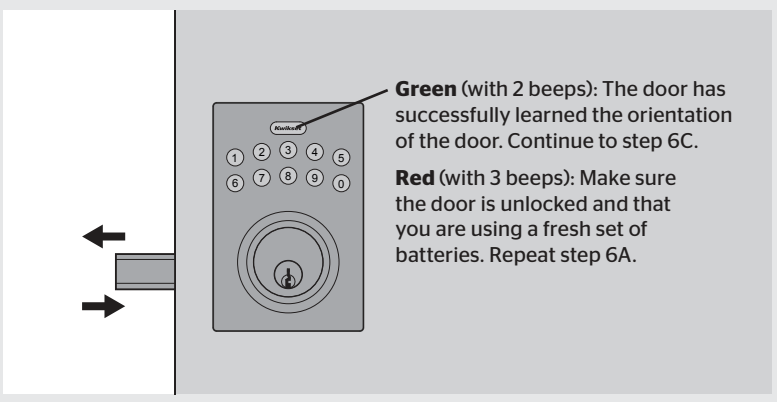

Green (with 2 beeps): The door has successfully learned the orientation of the door. Continue to step 6C.

Red (with 3 beeps): Make sure the door is unlocked and that you are using a fresh set of batteries. Repeat step 6A.

C Press the **Kwikset** button. The latch bolt will extend to lock.

During normal operation, press the **Kwikset** button to lock the door.

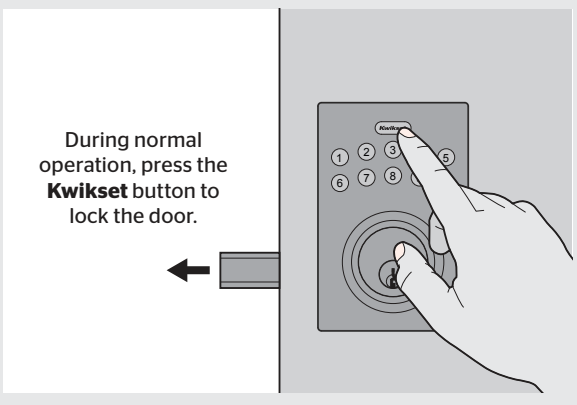

D Enter the default User Code (1-2-3-4), then press the **Kwikset** button. The door will unlock.

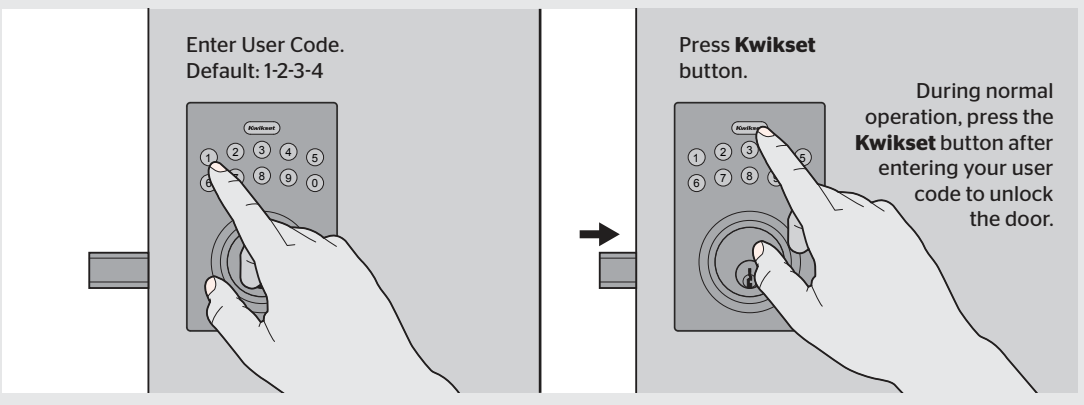

⚠ **IMPORTANT:** It is recommended that you replace the default Programming Code and default User Code with codes of your own. See page 4.

7 Quick Setup and Use

Move swiftly during programming. If no digit is pressed for 10 seconds, the system will time out and you will need to restart the procedure.

A How to delete all User Codes

CAUTION: A User Code is used to unlock the door while a Programming Code is a password for making changes to the lock features.

1. Make sure the lock is unlocked and the door is open.
2. Enter your Programming Code - for new installation, default is 0-0-0-0.
3. Press **Kwikset**. You will hear one beep.
4. Press **3**.
5. Press **Kwikset**. You will hear two beeps if successful. If you hear three beeps, it was unsuccessful. Repeat from step 1 slowly.

For a new installation, this will delete the default User Code 1-2-3-4. For subsequent instances, this will delete all User Codes in the lock.

Now the lock can only be operated by the key and turnpiece until a new User Code is added in step B.

B How to add User Codes

A total of 6 User Codes (and a temporary one-time User Code) may be programmed. Do not program a User Code that is the same as your Programming Code.

CAUTION: A User Code is used to unlock the door while a Programming Code is a password for making changes to the lock features.

1. Make sure the lock is unlocked and the door is open.
2. Enter your Programming Code - for new installation, default is 0-0-0-0.
3. Press **Kwikset**. You will hear one beep.
4. Press **1**.
5. Press **Kwikset**. You will hear one beep.
6. Enter a new User Code. It must be 4-10 digits.
7. Press **Kwikset**. You will hear two beeps if successful. If you hear three beeps, it was unsuccessful. Repeat from step 1 slowly.
8. Test the code: While your door is open, lock it. Wake the screen and touch the random lit digits.Enter your new User Code, then press **Kwikset**. The door should unlock.

C How to change your Programming Code

The Programming Code will not unlock your door. It is an added security feature that is used to set up all functions.

The default Programming Code is 0-0-0-0. It is recommended that you change it to a code of your own.

1. Make sure the lock is unlocked and the door is open.
2. Enter your Programming Code - for new installation, default is 0-0-0-0.
3. Press **Kwikset**. You will hear one beep.
4. Press **4**.
5. Press **Kwikset**. You will hear one beep.
6. Enter a new Programming Code. It must be between 4 and 10 digits.
7. Press **Kwikset**. You will hear two beeps if successful. If you hear three beeps, it was unsuccessful. Repeat from step 1 slowly.

8 Additional Programming Features

How to enable/disable Auto-Lock

The Auto-Lock feature automatically re-locks your door 30 seconds after unlocking. This feature is off by default.

1. Make sure the lock is unlocked and the door is open.
2. Enter your existing Programming Code.
3. Press **Kwikset**. You will hear one beep.
4. Press **5**.
5. Press **Kwikset**. You will hear two beeps if successful. If you hear three beeps, it was unsuccessful. Repeat from step 1 slowly.

How to enable/disable User Codes

If User Codes are disabled (example: when you go on vacation), the lock can only be operated by the key and turnpiece until they are enabled again.

1. Make sure the lock is unlocked and the door is open.
2. Enter your existing Programming Code.
3. Press **Kwikset**. You will hear one beep.
4. Press **8**.
5. Press **Kwikset**. You will hear two beeps if successful. If you hear three beeps, it was unsuccessful. Repeat from step 1 slowly.

How to mute/unmute lock

If the lock is muted, you will not hear beeping during programming, normal operation, low battery indicators or system alerts.

1. Make sure the lock is unlocked and the door is open.
2. Enter your existing Programming Code.
3. Press **Kwikset**. You will hear one beep.
4. Press **7**.
5. Press **Kwikset**. You will hear two beeps if successful. If you hear three beeps, it was unsuccessful. Repeat from step 1 slowly.

How to change Auto-Lock time delay

You can set the Auto-Lock time delay between 10 and 99 seconds.

1. Make sure the lock is unlocked and the door is open.
2. Enter your existing Programming Code.
3. Press **Kwikset**. You will hear one beep.
4. Press **6**.
5. Press **Kwikset**. You will hear one beep.
6. Enter time between 10 and 99 seconds.
7. Press **Kwikset**. You will hear two beeps if successful. If you hear three beeps, it was unsuccessful. Repeat from step 1 slowly.

How to delete individual User Codes

The lock is pre-programmed with a default User Code of 1-2-3-4. It is recommended that you delete this code.

1. Make sure the lock is unlocked and the door is open.
2. Enter your existing Programming Code.
3. Press **Kwikset**. You will hear one beep.
4. Press **2**.
5. Press **Kwikset**. You will hear one beep.
6. Enter the User Code you wish to delete.
7. Press **Kwikset**. You will hear two beeps if successful. If you hear three beeps, it was unsuccessful. Repeat from step 1 slowly.
8. Test the code: While your door is open, lock it. Enter the User Code, then press the Lock symbol. The door should not unlock.

How to add a one-time User Code

A one-time user code may be used only once, and then it will be deleted immediately after use.

1. Make sure the lock is unlocked and the door is open.
2. Enter your existing Programming Code.
3. Press **Kwikset**. You will hear one beep.
4. Press **9**.
5. Press **Kwikset**. You will hear one beep.
6. Enter a new User Code. It must be between 4 and 10 digits.
7. Press **Kwikset**. You will hear two beeps if successful. If you hear three beeps, it was unsuccessful. Repeat from step 1 slowly.

How to restore default settings

This procedure will delete all User Codes associated with the lock, and the default Programming Code (0-0-0-0) and User Code (1-2-3-4) will be restored.

1. Make sure the door is open and unlocked. Press and hold the Reset button for 5 seconds, until you hear 3 long beeps.

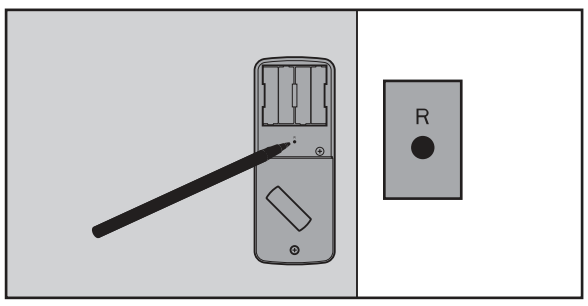

2. Enter the default Programming Code (0-0-0-0).
3. Press **Kwikset**. You will hear one beep.
4. Press **0**.
5. Press **Kwikset**. The latch bolt will extend and retract to learn the orientation of the door. If successful, the **Kwikset** button will flash green and you will hear 2 beeps. If unsuccessful, the **Kwikset** button will flash red and you will hear 3 beeps (make sure the door is open and unlocked and that you are using a fresh set of batteries).
6. Test the lock: With the door open and unlocked, press **Kwikset**. Make sure it locks the door.
7. Test the default User Code: Enter the default User Code (1-2-3-4), then press **Kwikset**. Make sure it unlocks the door.

The default Programming Code is 0-0-0-0. It is recommended that you change it to a code of your own.

The lock is pre-programmed with a default User Code of 1-2-3-4. It is recommended that you delete this code.

System Alerts

Alert	Reason	Solution
Kwikset button flashes red 3 times with 3 beeps.	Door jammed while attempting to lock.	Manually re-lock door. If needed, reposition strike.
	Door handing code has not been entered.	Enter door handing code.
	No User Code programmed, or User Codes are disabled.	Program at least one User Code, or re-enable User Codes.
	Unsuccessful programming.	Attempt programming procedure again.
	Incorrect User Code entered.	Re-enter User Code.
Kwikset button flashes red 5 times with 5 beeps.	5 incorrect User Codes entered within one minute.	Re-enter User Code after 45-second keypad lockout.
Kwikset button flashes red 10 times with 10 beeps.	Low battery.	Replace batteries.

Regulatory Compliance

This product complies with standards established by the following regulatory bodies:

- Federal Communications Commission (FCC)
- Industry Canada

FCC

This device complies with Part 15 of the FCC Rules. Operation is subject to the following two conditions: (1) this device may not cause harmful interference, and (2) this device must accept any interference received, including interference that may cause undesired operation.

This equipment has been tested and found to comply with the limits for a Class B digital device, pursuant to Part 15 of the FCC Rules. These limits are designed to provide reasonable protection against harmful interference in a residential installation. This equipment generates, uses, and can radiate radio frequency energy and, if not installed and used in accordance with the instructions, may cause harmful interference to radio communications. However, there is no guarantee that interference will not occur in a particular installation. If this equipment does cause harmful interference to radio or television reception, which can be determined by turning the equipment off and on, the user is encouraged to try to correct the interference by one or more of the following measures:

- Reorient or relocate the receiving antenna.
- Increase the separation between the equipment and receiver.
- Connect the equipment into an outlet on a circuit different from that to which the receiver is connected.
- Consult the dealer or an experienced radio/TV technician for help.

IMPORTANT! Changes or modifications not expressly approved by the manufacturer could void the user's authority to operate the equipment.

Industry Canada

This device complies with Industry Canada licence-exempt RSS standard(s). Operation is subject to the following two conditions: (1) this device may not cause interference, and (2) this device must accept any interference, including interference that may cause undesired operation of the device.

Troubleshooting

The lock cannot be locked or unlocked by the keypad.

Make sure the lock is programmed with at least one User Code and that the User Codes are not disabled. If needed, restore the lock's default settings.

The keypad doesn't respond when touched (no lights are visible and no beeping is heard).

Make sure the cables are properly connected, and make sure the batteries are new and installed correctly.

After the lock has been working normally, the latch bolt locks up and the turnpiece will not rotate.

Enter your Programming Code.

Press **Kwikset**.. You will hear one beep.

Press **0**.

Press **Kwikset** .. You will hear two beeps

The latch bolt will extend and retract to learn the orientation of the door. If successful, the **Kwikset** button will flash green and you will hear 2 beeps. If unsuccessful, the button will flash red and you will hear 3 beeps (make sure the door is open and unlocked and that you are using a fresh set of batteries).

The door can be locked with the Kwikset button, but the User Code will not unlock the door.

Make sure the User Code is correct and that the **Kwikset** button is pushed after entering the User Code. If the door still won't unlock, use a key to unlock the door. Call technical support for further troubleshooting.

When the door is closed and the Kwikset button is pressed to lock the door, the lock beeps 3 times. When the door is open and the Kwikset button is pressed to lock the door, the lock doesn't beep.

Make sure that the hole in the door frame behind the strike is drilled at least 1 inch (25 mm) deep. Also make sure the strike plate is aligned with the latch bolt. If needed, reposition the strike.

Important Safeguards

1. Read all instructions in their entirety.
2. Familiarize yourself with all warning and caution statements.
3. Remind all family members of safety precautions.
4. Restrict access to your lock's interior assembly and routinely check your settings to ensure they have not been altered without your knowledge.
5. Protect your User Codes and Programming Code.
6. Dispose of used batteries according to local laws and regulations.

CAUTION: Prevent unauthorized entry. This lock has a pre-set User Code and Programming Code. Upon installation and set-up, replace both of these codes with your own. Since anyone with access to the interior assembly can reset the lock and change the User Codes, you must restrict access to the interior assembly and routinely check the User Codes to ensure they have not been altered without your knowledge.

WARNING: This Manufacturer advises that no lock can provide complete security by itself. This lock may be defeated by forcible or technical means, or evaded by entry elsewhere on the property. No lock can substitute for caution, awareness of your environment, and common sense. Builder's hardware is available in multiple performance grades to suit the application. In order to enhance security and reduce risk, you should consult a qualified locksmith or other security professional.

© 2018 Spectrum Brands, Inc.