HP ENVY Photo 7800 All-in-One series

Table of contents

1 How do I? 1

2 Get started 2

Accessibility 3
HP EcoSolutions (HP and the Environment) 4
Printer parts 8
Control panel and status lights 10
Paper basics 13
Load paper 16
Load original 22
Update the printer 23
Open the HP printer software (Windows) 24
Use the HP Smart app to print, scan, and troubleshoot from an iOS, Android, or Windows 10 device 25
Turn the printer off 26

3 Print 27

Print using the HP Smart app 28
Print documents using HP printer software 29
Print photos using HP printer software 30
Print on envelopes 32
Print on both sides (duplexing) 34
Print using the maximum dpi 35
Print from apps on mobile devices 37
Tips for successful printing 38

4 Copy and scan 41

Copy 42
Scan 43
Tips for copy and scan success 52

5 Fax 53
Send a fax 54
Receive a fax 59
Set up phone book contacts 63
Change fax settings 65
Fax and digital phone services 69
Fax on Voice over Internet Protocol 70
Use reports 71
Additional fax setup 75

6 Web Services 96
What are Web Services? 97
Set up Web Services 98
Use Web Services 100
Remove Web Services 102

7 Work with cartridges 103
Information on cartridges and the printhead 104
Check the estimated ink levels 105
Replace the cartridges 106
Order cartridges 108
Use single-cartridge mode 109
Store printing supplies 110
Cartridge warranty information 111

8 Network setup 112
Set up the printer for wireless communication 113
Change network settings 117
Use Wi-Fi Direct 119

9 Printer management tools 122
The HP Smart app 123
Toolbox (Windows) 123
HP Utility (OS X and macOS) 125
Embedded web server 126

10 Solve a problem 129
Jams and paper-feed issues 130
Cartridge issues 135
Printing issues 137

Copy issues 146
Scan issues 147
Fax issues 148
Network and connection issues 157
Printer hardware issues 159
Get help from the printer control panel 160
Get help from the HP Smart app 161
Understand printer reports 162
Solve problems using Web Services 163
Maintain the printer 164
Restore original factory defaults and settings 167
HP support 169

Appendix A Technical information 171
HP Company notices 172
Specifications 173
Regulatory notices 175
Environmental product stewardship program 184

Index 191

1 How do I?

Learn how to use your HP ENVY Photo 7800 series

- Get started
- Print
- Copy and scan
- Fax
- Web Services
- Work with cartridges
- Network setup
- Solve a problem

2 Get started

This section contains the following topics:

- Accessibility
- HP EcoSolutions (HP and the Environment)
- Printer parts
- Control panel and status lights
- Paper basics
- Load paper
- Load original
- Update the printer
- Open the HP printer software (Windows)
- Use the HP Smart app to print, scan, and troubleshoot from an iOS, Android, or Windows 10 device
- Turn the printer off

Accessibility

The printer provides a number of features that make it accessible for people with disabilities.

Visual

The HP software provided with the printer is accessible for users with visual impairments or low vision by using your operating system's accessibility options and features. The software also supports most assistive technology such as screen readers, Braille readers, and voice-to-text applications. For users who are color blind, colored buttons and tabs used in the HP software have simple text or icon labels that convey the appropriate action.

Mobility

For users with mobility impairments, the HP software functions can be executed through keyboard commands. The HP software also supports Windows accessibility options such as StickyKeys, ToggleKeys, FilterKeys, and MouseKeys. The printer doors, buttons, paper trays, and paper-width guides can be operated by users with limited strength and reach.

Support

For more information about accessibility solutions for HP products, visit the HP Accessibility and Aging website (www.hp.com/accessibility).

For accessibility information for OS X and macOS, visit the Apple website at www.apple.com/accessibility.

HP EcoSolutions (HP and the Environment)

HP is committed to helping you optimize your environmental footprint and empowering you to print responsibly—at home or in the office.

For more detailed information about environmental guidelines that HP follows during the manufacturing process, see Environmental product stewardship program. For more information about HP's environmental initiatives, visit www.hp.com/ecosolutions.

- Manage Power
- Quiet Mode
- Optimize Printing Supplies

Manage Power

Use **Sleep Mode**, **Auto-off** and **Schedule Printer On/Off** to conserve electricity.

- Sleep mode
- Auto- off
- Schedule On and Off

Sleep mode

Power usage is reduced while in Sleep mode. After initial setup of printer, the printer will enter Sleep mode after five minutes of inactivity.

You can set up the printer to enter sleep mode after some time of inactivity or through pressing (the Power button).

To enter sleep mode after some time of inactivity

Use the following instructions to change the period of inactivity before the printer sleeps.

1. From the printer control panel, do one of the following.
   - Touch or swipe down the tab at the top of the screen to open the Dashboard, touch .
   - Touch or swipe down the tab at the top of the screen to open the Dashboard, touch , and then touch **Power Management**.
2. Touch **Sleep Mode**, and then touch the desired option.

NOTE: The printer will enter sleep mode when the selected time of inactivity is reached.

To enter sleep mode through pressing (the Power button)

You can make the printer enter sleep mode directly by pressing (the Power button).

1. Touch , and then touch **Power Management**.
2. Touch **Power Button**, and then select **Enters Sleep Mode**.
3. Press (the Power button) located on the front left side of the printer to make the printer enter the sleep mode.

NOTE: The printer will enter sleep mode 5 seconds after you press (the Power button). During this period, you can press (the Power button) again to make the printer enter sleep mode immediately.

Auto- off

This feature turns the printer off after 2 hours of inactivity to help reduce energy use. Auto-Off turns the printer off completely, so you must use the Power button to turn the printer back on.

If your printer supports this energy saving feature, Auto-Off is automatically enabled or disabled depending on printer capabilities and connection options. Even when Auto-Off is disabled, the printer enters Sleep mode after 5 minutes of inactivity to help reduce energy use

- Auto-Off is enabled when the printer is turned on, if the printer does not have network, fax or Wi-Fi Direct capability, or is not using these capabilities.
- Auto-Off is disabled when a printer's wireless or Wi-Fi Direct capability is turned on or when a printer with fax, USB, or Ethernet network capability establishes a fax, USB, or Ethernet network connection.

Schedule On and Off

Schedule On and Off

Use this feature to automatically turn the printer on or off on selected days. For example, you can schedule the printer to turn on at 8 a.m. and turn off at 8 p.m. from Monday to Friday. In this way, you save energy during the night and weekends.

Use the following instructions to schedule the day and time for On and Off.

1. From the printer control panel, touch or swipe down the tab at the top of the screen to open the Dashboard, touch .
2. Touch **Schedule On/Off**.
3. Touch the desired option, and follow the onscreen messages to set the day and time to turn the printer off and on.

CAUTION: Always turn the printer off properly, using either **Schedule Off** or (the Power button) located on the front left side of the printer.

If you improperly turn the printer off, the print carriage might not return to the correct position, causing problems with the cartridges and print quality issues.

Quiet Mode

Quiet Mode slows down printing to reduce overall noise without affecting print quality. It only works when printing on plain paper. Additionally, Quiet Mode is disabled if you are printing using the best or presentation print quality. To reduce printing noise, turn on Quiet Mode. To print at normal speed, turn Quiet Mode off. Quiet Mode is off by default.

NOTE: Quiet Mode does not work if you print photos or envelopes.

You can create a schedule by selecting the time when the printer prints in Quiet Mode. For example, you can schedule the printer to be in Quiet Mode from 10 p.m. to 8 a.m. everyday.

To turn on Quiet Mode from the printer control panel

1. From the printer control panel, touch or swipe down the tab at the top of the screen to open the Dashboard, and then touch (**Setup**).
2. Touch **Quiet Mode** .
3. Turn on **Quiet Mode** .

To create a schedule for Quiet Mode from the printer control panel

1. From the printer control panel, touch or swipe down the tab at the top of the screen to open the Dashboard, and then touch (**Setup**).
2. Touch **Quiet Mode** .
3. Turn on **Quiet Mode** .
4. Turn on **Schedule**, and then change the start time and end time of the schedule.

To turn on Quiet Mode while the printer is printing

- On the printing screen, touch (Quiet Mode) to turn it on.

NOTE: Quiet Mode is turned on only after the current page is printed and is only used for the current print job.

To turn Quiet Mode on or off from the printer software (Windows)

1. Open the HP printer software. For more information, see Open the HP printer software (Windows).
2. Click **Quiet Mode** .
3. Select **On** or **Off** .
4. Click **Save Setting**.

To turn Quiet Mode on or off from the printer software (OS X and macOS)

1. Open HP Utility.

   NOTE: HP Utility is located in the **HP** folder in the **Applications** folder.

2. Select the printer.

3. Click **Quiet Mode** .
4. Select **On** or **Off** .
5. Click **Apply Now**.

To turn Quiet Mode on or off from the Embedded Web Server (EWS)

1. Open the EWS. For more information, see Open the embedded web server.
2. Click the **Settings** tab.
3. In the **Preferences** section, select **Quiet Mode** , and then select **On** or **Off** .
4. Click **Apply**.

Optimize Printing Supplies

To optimize printing supplies such as ink and paper, try the following:

- Optimize paper usage by printing on both sides of the paper.
- Change the print quality in the printer driver to a draft setting. The draft setting uses less ink.
- Do not clean the printhead unnecessarily. Doing so wastes ink and shortens the life of the cartridges.
- Recycle used original HP cartridges through HP Planet Partners. For more information, visit www.hp.com/recycle.

Printer parts

Front view

Figure 2-1 Front and top views of HP ENVY Photo 7800 All-in-One series

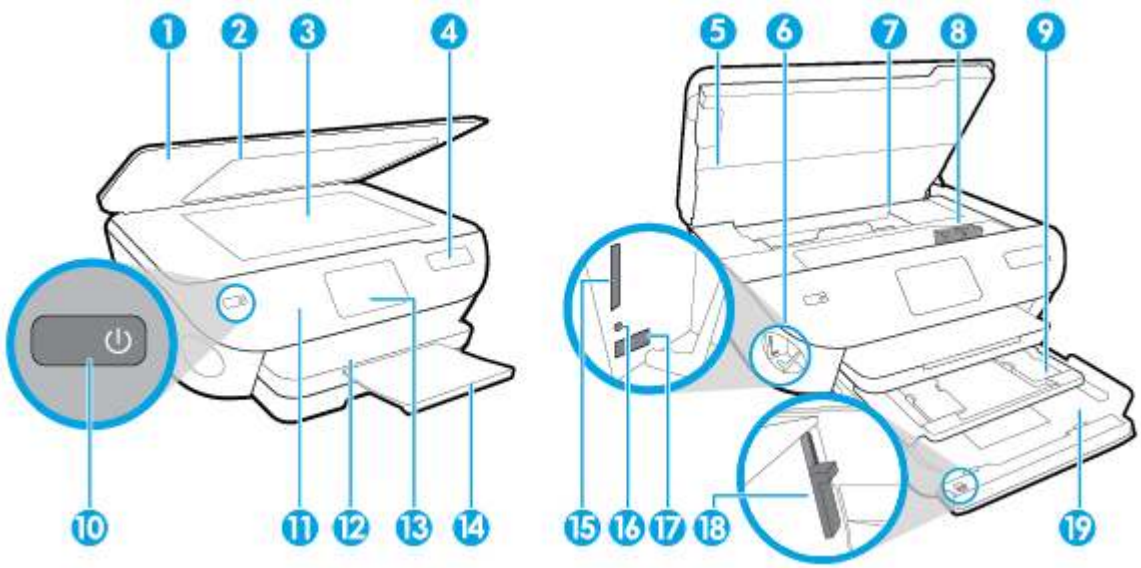

Feature	Description
1	Lid
2	Lid-backing
3	Scanner glass
4	Printer model name
5	Cartridge access door
6	Memory device area
7	Cartridge access area
8	cartridges
9	Photo tray
10	On button (also referred to as the Power button)
11	Control panel
12	Output tray
13	Color graphics display (also referred to as the display)
14	Automatic output tray extender (also referred to as the tray extender)
15	Memory card slot
16	Memory device light
17	Front universal serial bus (USB) port
18	Unlatch button
19	Paper tray

Printing supplies area

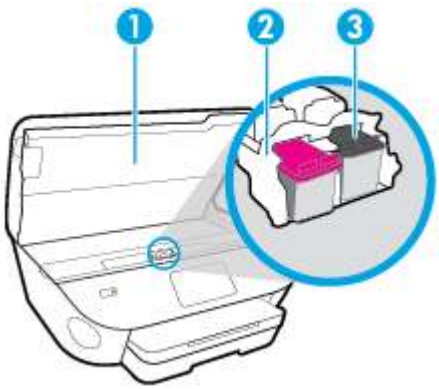

Feature	Description
1	Cartridge access door
2	Printhead
3	Cartridges

NOTE: Cartridges should be kept in the printer to prevent possible print quality issues or printhead damage. Avoid removing supplies for extended periods of time.

Back view

Figure 2-2 Rear view of HP ENVY Photo 7800 All-in-One series

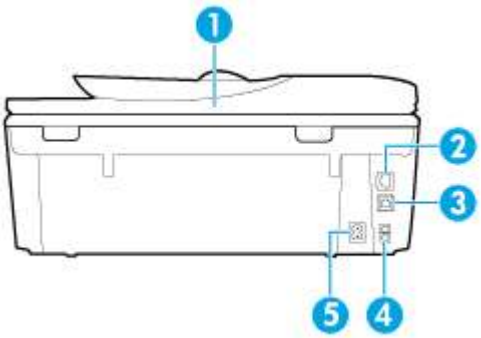

Feature	Description
1	Document feeder
2	Ethernet network port
3	Rear USB port
4	Fax ports: 2-EXT (top) and 1-LINE (bottom)
5	Power connection. Use only the power cord supplied by HP.

Control panel and status lights

Overview of buttons and lights

The following diagram and related table provides a quick reference to the printer control panel features.

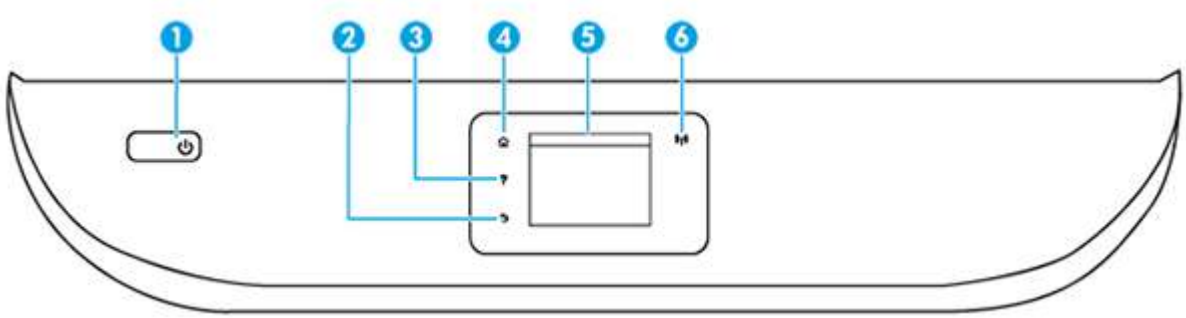

Label	Name and Description
1	Power button: Turns the printer on or off.
2	Back button: Returns to the previous screen.
3	Help button: Opens the Help menu for the current operation.
4	Home button: Returns to the Home screen, the screen that is displayed when you first turn on the printer.
5	Control panel display: Touch the screen to select menu options, or scroll through the menu items.
6	Wireless light: Indicates the status of the printer wireless connection. • Solid blue light indicates that wireless connection has been established and you can print. • Slow blinking light indicates that wireless is on, but the printer is not connected to a network. Make sure your printer is within the range of wireless signal. • Fast blinking light indicates wireless error. Refer to the message on the printer display. • If wireless is turned off, the wireless light is off and the display screen shows **Wireless Off**.

Control panel display icons

Icon	Purpose
	Copy : Opens the **Copy** menu where you can select a copy type or change the copy settings.
	Scan : Opens the **Scan** menu where you can select a destination for your scan.
	Apps : Access the apps from your printer.

Icon	Purpose
	**Photo** : Opens the **Photo** menu where you can view and print photos.
	**Fax** : Displays a screen where you can send a fax, or change fax settings.
	**Setup** : Opens the **Setup** menu where you can change preferences and use tools to perform maintenance functions.
	**Help** : Opens the Help menu where you can view How To videos, printer feature information, and tips.
	HP ePrint icon: Opens the **Web Services Summary** menu, where you can check ePrint status details, change ePrint settings, or print an Info page.
	Wi-Fi Direct icon: Opens the **Wi-Fi Direct** menu where you can turn on Wi-Fi Direct, turn off Wi-Fi Direct, and display the Wi-Fi Direct name and password.
	Wireless icon: Opens the **Wireless Summary** menu where you can check wireless status and change wireless settings. You can also print a wireless test report, helping diagnose network connection issues. **NOTE:**  (Ethernet) and  (Wireless) will not be displayed at the same time. Showing the Ethernet icon or the wireless icon depends on the way your printer is connected to the network. If the network connection of the printer has not been set up, by default, the printer control panel display shows  (Wireless).
	Ethernet icon: Shows that an Ethernet network connection exists and also provides easy access to the the network status screen.
	ECO icon: Displays a screen where you can configure some of the printer environmental features.
	Fax Status icon: Displays status information for the Auto Answer function, fax logs, and the fax sound volume.
	Ink icon: Shows estimated ink levels by cartridge. Displays a warning symbol if the ink level is less than the minimum expected ink level. **NOTE:** Ink level warnings and indicators provide estimates for planning purposes only. When you receive a low-ink warning message, consider having a replacement cartridge available to avoid possible printing delays. You do not need to replace cartridges until the print quality becomes unacceptable.

Change printer settings

Use the control panel to change the printer function and settings, print reports, or get help for the printer.

TIP: If the printer is connected to a computer, you can also change the printer settings using the printer management tools in computer.

For more information about these tools, see Printer management tools.

To change settings for a function

The Home screen of the control panel display shows the available functions for the printer.

1. From the control panel display, select a function tab, touch and slide your finger across the screen, and then touch the icon to select the desired function.
2. After selecting a function, touch (**Settings**), scroll through the available settings, and then touch the setting you want to change.
3. Follow the prompts on the control panel display to change the settings.

TIP: Touch (Home) to return to the Home screen.

To change the printer settings

To change the printer settings or print reports, use the options available on the **Setup** menu.

1. From the printer control panel, touch or swipe down the tab at the top of the screen to open the Dashboard, and then touch (**Setup**).
2. Touch and scroll through the screens.
3. Touch the screen items to select screens or options.

TIP: Touch (Home) to return to the Home screen.

Dashboard

The Dashboard on the printer control panel lets you access the icons on the display, check the status of the printer, or monitor and manage current and scheduled printer tasks.

To open the Dashboard, touch or swipe down the tab at the top of a screen on the control panel.

Paper basics

The printer is designed to work well with most types of office paper. It is best to test a variety of print paper types before buying large quantities. Use HP paper for optimum print quality. Visit the HP website at www.hp.com for more information about HP paper.

HP recommends plain papers with the ColorLok logo for printing everyday documents. All papers with the ColorLok logo are independently tested to meet high standards of reliability and print quality, and produce documents with crisp, vivid color, bolder blacks, and that dry faster than ordinary plain papers. Look for papers with the ColorLok logo in a variety of weights and sizes from major paper manufacturers.

This section contains the following topics:

- Recommended papers for printing
- Order HP paper supplies
- Tips for selecting and using paper

Recommended papers for printing

If you want the best print quality, HP recommends using HP papers that are specifically designed for the type of project you are printing.

Depending on your country/region, some of these papers might not be available.

Photo printing

- **HP Premium Plus Photo Paper**

  HP Premium Plus Photo Paper is HP's highest-quality photo paper for your best photos. With HP Premium Plus Photo Paper, you can print beautiful photos that are instant-dry so you can share them right off the printer. The printer supports several sizes, including A4, 8.5 x 11 inches, 4 x 6 inches (10 x 15 cm), and 5 x 7 inches (13 x 18 cm) in two finishes - glossy or soft gloss (semi-gloss). Ideal for framing, displaying, or gifting your best photos and special photo projects. HP Premium Plus Photo Paper delivers exceptional results with professional quality and durability.

- **HP Advanced Photo Paper**

  This glossy photo paper features an instant-dry finish for easy handling without smudging. It resists water, smears, fingerprints, and humidity. Your prints have a look and feel comparable to a store-processed photo. It is available in several sizes, including A4, 8.5 x 11 inches, 10 x 15 cm (4 x 6 inches), 13 x 18 cm (5 x 7 inches). It is acid-free for longer lasting documents.

- **HP Everyday Photo Paper**

  Print colorful, everyday snapshots at a low cost, using paper designed for casual photo printing. This affordable photo paper dries quickly for easy handling. Get sharp, crisp images when you use this paper with any inkjet printer. It is available in glossy finish in several sizes, including A4, 8.5 x 11 inches, 5 x 7 inches and 4 x 6 inches (10 x 15 cm). It is acid-free for longer lasting documents.

Business documents

- **HP Premium Presentation Paper 120g Matte or HP Professional Paper 120g Matte**

  This paper is a heavy two-sided matte paper perfect for presentation, proposals, reports, and newsletters. It is heavyweight for an impressive look and feel.

- **HP Brochure Paper Glossy** or **HP Professional Paper Glossy**

  These papers are glossy-coated on both sides for two-sided use. They are the perfect choice for near-photographic reproductions and business graphics for report covers, special presentations, brochures, mailers, and calendars.

- **HP Brochure Paper Matte** or **HP Professional Paper Matte**

  These papers are matte-coated on both sides for two-sided use. They are the perfect choice for near-photographic reproductions and business graphics for report covers, special presentations, brochures, mailers, and calendars.

Everyday printing

All the papers listed for everyday printing feature ColorLok Technology for less smearing, bolder blacks, and vivid colors.

- **HP Bright White Inkjet Paper**

  HP Bright White Inkjet Paper delivers high-contrast colors and sharp text. It is opaque enough for two-sided color usage with no show-through, which makes it ideal for newsletters, reports, and flyers.

- **HP Printing Paper**

  HP Printing Paper is a high-quality multifunction paper. It produces documents that look and feel more substantial than documents printed on standard multipurpose or copy paper. It is acid-free for longer lasting documents.

- **HP Office Paper**

  HP Office Paper is a high-quality multifunction paper. It is suitable for copies, drafts, memos, and other everyday documents. It is acid-free for longer lasting documents.

Order HP paper supplies

The printer is designed to work well with most types of office paper. Use HP paper for optimum print quality.

To order HP papers and other supplies, go to www.hp.com . At this time, some portions of the HP website are available in English only.

HP recommends plain papers with the ColorLok logo for printing and copying of everyday documents. All papers with the ColorLok logo are independently tested to meet high standards of reliability and print quality, and produce documents with crisp, vivid color, bolder blacks and shorter dry-time than ordinary plain papers. Look for papers with the ColorLok logo in a variety of weights and sizes from major paper manufacturers.

Tips for selecting and using paper

For the best results, observe the following guidelines.

- Load only one type and one size of paper at a time into a tray or document feeder.
- Make sure the paper is loaded correctly when loading from the input tray or document feeder.

- Do not overload the tray or document feeder.
- To prevent jams, poor print quality, and other printing problems, avoid loading the following paper in the tray or document feeder:
  - Multipart forms
  - Media that is damaged, curled, or wrinkled
  - Media with cutouts or perforations
  - Media that is heavily textured, embossed, or does not accept ink well
  - Media that is too lightweight or stretches easily
  - Media that contains staples or clips

Load paper

Select a paper size to continue.

To load small-size paper

1. Pull out the photo tray.

   Slide the paper-width guides outward, and then remove any previously loaded media.

   If you do not see the photo tray, remove the output tray from the printer.

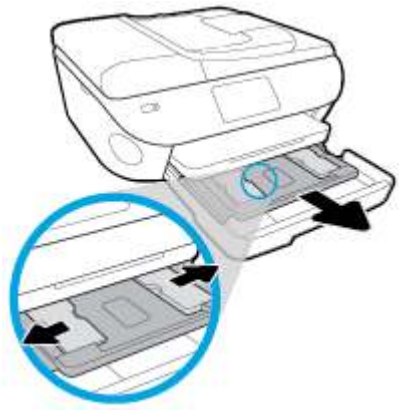

2. Load paper.

   - Insert a stack of photo paper into the photo tray print side down.

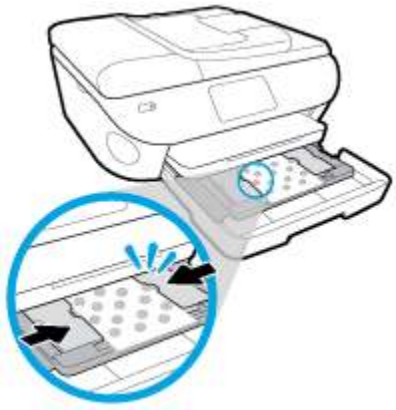

   - Slide the photo paper forward until it stops.
   - Slide the paper-width guides inward until they stop at the edges of the paper.

3. Push the photo tray back in.
4. Change or retain the paper settings on the printer display.

To load full-size paper

1. Pull out the paper tray, slide the paper-width guides outward, and then remove any previously loaded media.



2. Load paper.

   - Insert a stack of paper into the paper tray with the short edge forward and the print side down.
   - Slide the paper forward until it stops.
   - Slide the paper-width guides inward until they stop at the edges of the paper.

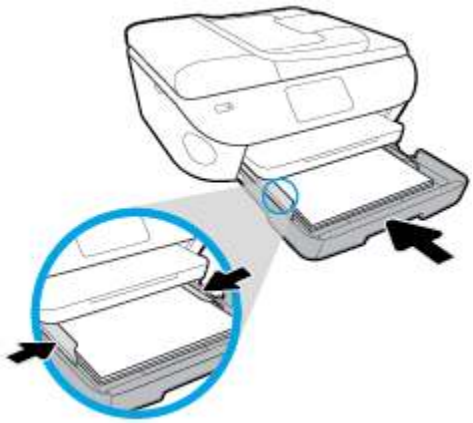

3. Push the paper tray back in.
4. Change or retain the paper settings on the printer display.

To load legal paper

1. Pull out the paper tray, slide the paper-width guides outward, and then remove any previously loaded media.

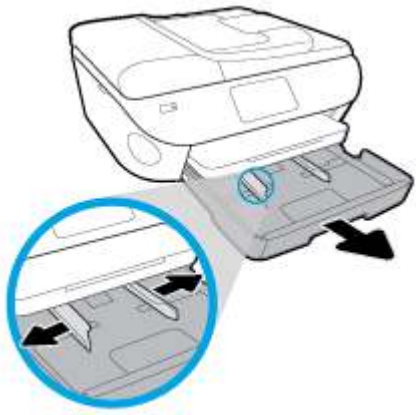

2. Unlock and open the front side of the paper tray.

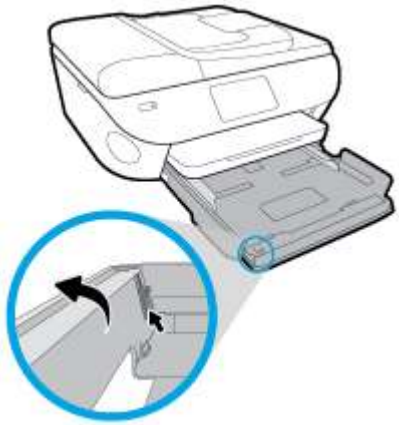

3. Load paper.

   - Insert a stack of paper into the paper tray with the short edge forward and the print side down.
   - Slide the paper forward until it stops.

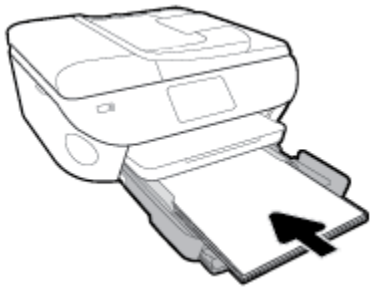

- Slide the paper-width guides inward until they stop at the edges of the paper.

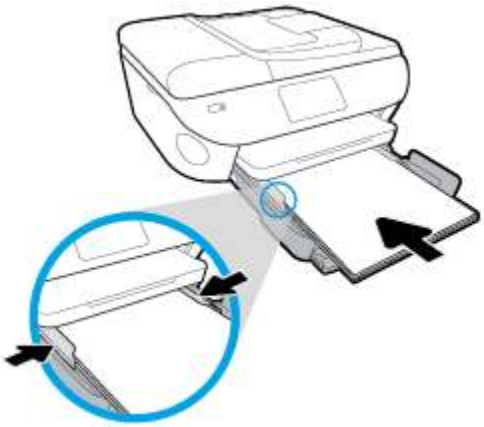

4. Push the paper tray back in.
5. Change or retain the paper settings on the printer display.

To load panorama photo paper

1. Pull out the paper tray, slide the paper-width guides outward, and then remove any previously loaded media.

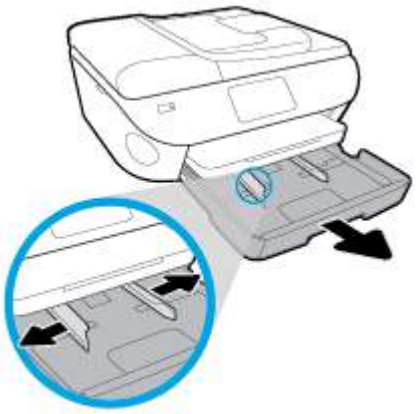

2. Load paper.
   - Insert a stack of panorama photo paper into the paper tray print side down.



- Slide the photo paper forward until it stops.
- Slide the paper-width guides inward until they stop at the edges of the paper.

3. Push the paper tray back in.
4. Change or retain the paper settings on the printer display.

To load envelopes

1. Pull out the paper tray, slide the paper-width guides outward, and then remove any previously loaded media.

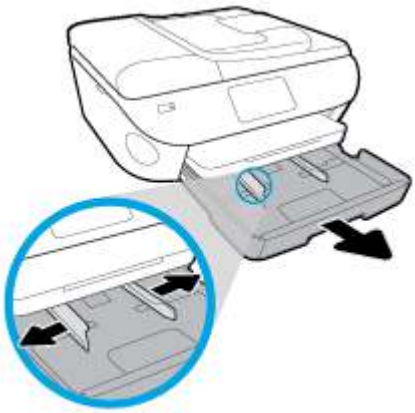

2. Load envelopes
   - Insert one or more envelopes in the center of the paper tray. The print side should face down. Load envelopes according to the graphic.

- Slide a stack of envelopes inward until it stops.

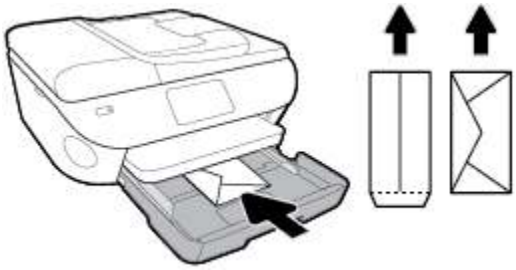

- Slide the paper-width guides inward against the stack of envelopes until they stop.

3. Push the paper tray back in.
4. Change or retain the paper settings on the printer display.

Load original

To load original on the scanner glass

1. Lift the scanner lid.



2. Load the original print side down on the right front corner of the glass.

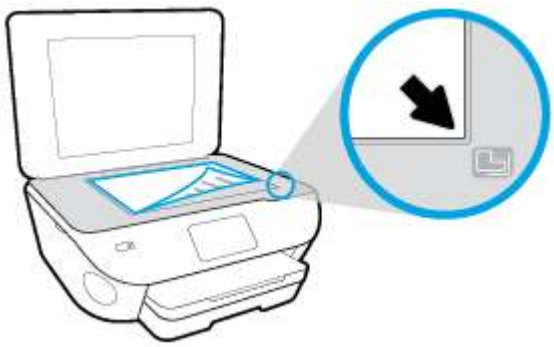

3. Close the scanner lid.

To load an original in the document feeder

1. Slide paper-width guides outwards.
2. Load original print-side up in the document feeder.

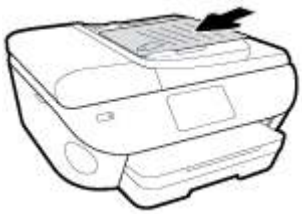

3. Slide paper-width guides inward until they stop at the edge of paper.

Update the printer

By default, if the printer is connected to a network and Web Services has been enabled, the printer automatically checks for updates.

To update the printer using the printer control panel

1. From the top of the screen, touch or swipe down the tab to open the Dashboard, touch (**Setup**)
2. Touch **Printer Maintenance** .
3. Touch **Update the Printer** .
4. Touch **Check for Printer Updates Now**.

To enable the printer to automatically check for updates

1. From the printer control panel, touch or swipe down the tab at the top of the screen to open the Dashboard, touch (**Setup**).
2. Touch **Printer Maintenance**.
3. Touch **Update the Printer**.
4. Touch **Printer Update Options**.
5. Select **Install Automatically (Recommended)** or **Alert When Available**.

To update the printer using the embedded web server

1. Open the EWS.

   For more information, see Embedded web server.
2. Click the **Tools** tab.
3. In the **Printer Updates** section, click **Firmware Updates**, and then follow the onscreen instructions.

NOTE: If a printer update is available, the printer downloads and installs the update, and then restarts.

NOTE: If prompted for proxy settings and if your network uses proxy settings, follow the onscreen instructions to set up a proxy server. If you do not have the details, contact your network administrator or the person who set up the network.

Open the HP printer software (Windows)

You can use the HP printer software to configure the printer settings, check estimated ink levels, order printing supplies, maintain the printer, resolve printing issues, and more. More information about the available printer software options is provided throughout this guide.

After installing the HP printer software, depending on your operating system, do one of the following:

NOTE: If you are using HP Smart app instead of the printer software, see Use the HP Smart app to print, scan, and troubleshoot from an iOS, Android, or Windows 10 device

- **Windows 10**: From the computer desktop, click **Start**, select **HP** from the app list, and then select the icon with the printer name.
- **Windows 8.1**: Click the down arrow in lower left corner of the Start screen, and then select the printer name.
- **Windows 8**: Right-click an empty area on the Start screen, click **All Apps** on the app bar, and then select the printer name.
- **Windows 7**, **Windows Vista**, and **Windows XP**: From the computer desktop, click **Start**, select **All Programs**, click **HP**, click the folder for the printer, and then select the icon with the printer name.

Use the HP Smart app to print, scan, and troubleshoot from an iOS, Android, or Windows 10 device

HP Smart (formerly known as HP All-in-One Printer Remote) helps you to set up, scan, print, share, and manage your HP printer. You can share documents and images through email, text messages, and popular cloud and social media services (such as iCloud, Google Drive, Dropbox, and Facebook). You can also set up new HP printers, as well as monitor and order supplies.

NOTE: The HP Smart app might not be available in all languages. Some features might not be available with all printer models.

To install the HP Smart app

- The HP Smart app is supported on iOS, Android, and Windows 10 devices. To install the app on your device, go to 123.hp.com and follow the onscreen instructions to access your device's app store.

To open the HP Smart app on a Windows 10 computer

- After installing the HP Smart app, from the device desktop, click **Start**, and then select **HP Smart** from the app list.

Connect to your printer

- Make sure that the printer is turned on and is connected to the same network as your device. Then HP Smart will automatically detect the printer.

For more information about printing, scanning, and troubleshooting using HP Smart, see Print using the HP Smart app, Scan using the HP Smart app, Get help from the HP Smart app and Access printer features and troubleshooting information from mobile devices.

Turn the printer off

Press (the Power button) to turn off the printer. Wait until the power light turns off before unplugging the power cord or turning off a power strip.

CAUTION: If you incorrectly turn the printer off, the print carriage might not return to the correct position, causing problems with the cartridges and print quality issues.

3 Print

Most print settings are automatically handled by the software application. Change the settings manually only when you want to change print quality, print on specific types of paper, or use special features.

This section contains the following topics:

- Print using the HP Smart app
- Print documents using HP printer software
- Print photos using HP printer software
- Print on envelopes
- Print on both sides (duplexing)
- Print using the maximum dpi
- Print from apps on mobile devices
- Tips for successful printing

Print using the HP Smart app

To print from a Windows 10 device

1. Load paper in the input tray. For more information, see Load paper.
2. Open HP Smart. For more information, see Use the HP Smart app to print, scan, and troubleshoot from an iOS, Android, or Windows 10 device.
3. Make sure your printer is selected.

   TIP: If you want to select a different printer, click or tap the Printer icon on the toolbar at the left side of the screen, and then select **Select a Different Printer** to view all available printers.
4. Select **Photos**, locate a photo you want to print, and then click or tap **Select Photos to Print**.

   Select **Documents**, locate a PDF document you want to print, and then click or tap **Print**.
5. Select the appropriate options. To view more settings, click or tap **More settings**. For more information about printing settings, see Tips for successful printing.
6. Click or tap **Print** to begin printing.

To print from an Android or iOS device

1. Open the HP Smart app.
2. Tap the Plus icon if you need to change to a different printer, or add a new printer.
3. Tap a printing option (for example, **Print Photos** or **Print Facebook Photos**, etc.). You can print photos and documents from your device, cloud storage, or social media sites.
4. Select the photo or document you want to print.
5. Tap **Print**.

Print documents using HP printer software

To print documents (Windows)

1. Load paper in the input tray. For more information, see Load paper.
2. From your software, select **Print**.
3. Make sure your printer is selected.
4. Click the button that opens the **Properties** dialog box.

   Depending on your software application, this button might be called **Properties**, **Options**, **Printer Setup**, **Printer Properties**, **Printer**, or **Preferences**.

   NOTE: To set print settings for all print jobs, make the changes in the HP software provided with the printer. For more information on the HP software, see Printer management tools.

5. Select the appropriate options on the **Printing Shortcuts** or **Printing Shortcut** tab.

   To change other print settings, click the other tabs.

   For more printing tips, see Tips for successful printing.

   NOTE: If you change the paper size, be sure to load the correct paper in the input tray and set the paper size on the printer control panel.

6. Click **OK** to close the **Properties** dialog box.
7. Click **Print** or **OK** to begin printing.

To print documents (OS X and macOS)

1. From the **File** menu in your software, choose **Print**.
2. Make sure your printer is selected.
3. Set the print options.

   If you do not see options on the Print dialog, click **Show Details**.

   - Choose the appropriate paper size in the **Paper Size** pop-up menu.

     NOTE: If you change the paper size, ensure that you have loaded the correct paper.

   - Select the orientation.
   - Enter the scaling percentage.

4. Click **Print**.

Print photos using HP printer software

Make sure photo paper is loaded into the photo tray.

To print a photo from the computer (Windows)

1. Load paper in the input tray. For more information, see Load paper.
2. From your software, select **Print**.
3. Make sure your printer is selected.
4. Click the button that opens the **Properties** dialog box.

   Depending on your software application, this button might be called **Properties**, **Options**, **Printer Setup**, **Printer Properties**, **Printer**, or **Preferences**.
5. Select the appropriate options on the **Printing Shortcuts** or **Printing Shortcut** tab.

   To change other print settings, click the other tabs.

   For more printing tips, see Tips for successful printing.

   NOTE: If you change the paper size, be sure to load the correct paper in the input tray and set the paper size on the printer control panel.
6. Click **OK** to close the **Properties** dialog box.
7. Click **Print** or **OK** to begin printing.

NOTE: After the printing is finished, remove unused photo paper from the input tray. Store the photo paper so it does not start to curl, which could reduce the quality of your printout.

To print a photo from the computer (OS X and macOS)

1. From the **File** menu in your software, choose **Print**.
2. Make sure your printer is selected.
3. Set the print options.

   If you do not see options on the Print dialog, click **Show Details**.

   - Choose the appropriate paper size in the **Paper Size** pop-up menu.

     NOTE: If you change the paper size ensure that you have loaded the correct paper.
   - Select the orientation.
4. From the pop-up menu, choose **Paper Type/Quality**, and then choose the following settings:

   - **Paper Type**: The appropriate photo paper type
   - **Quality**: Select the option that provides the best quality or maximum dpi.
   - Click the **Color Options** disclosure triangle, and then choose the appropriate **Photo Fix** option.

- **Off**: applies no changes to the image.
- **On**: automatically focuses the image; moderately adjusts image sharpness.

5. Select any other print settings you want, and then click **Print**.

To print photos from a memory device

1. On the printer display, touch **Photo**, and then select a photo type that you want to print.
2. Insert a memory device into the slot.

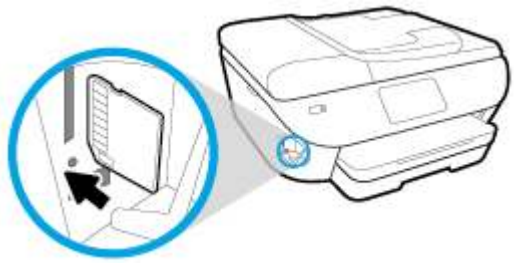

NOTE: If you insert both memory card and USB flash drive into the printer, you will need to select a memory device.

CAUTION: Do not remove the flash drive from the printer USB port while it is being accessed by the printer. This can damage the files on the USB flash drive. You can safely remove a USB flash drive only when the USB port light is not blinking.

3. Follow the on-screen steps to set properties, select the photos you want to print, and touch **Continue**.
4. Touch (**Edit**) to change brightness, crop, or rotate the selected photo, or touch (**Print Settings**) to set properties.
5. Touch **Continue** and preview the selected photo.
6. Touch **Print** to begin printing.

Print on envelopes

Avoid envelopes with the following characteristics:

- Very slick finish
- Self-stick adhesives, clasps, or windows
- Thick, irregular, or curled edges
- Areas that are wrinkled, torn, or otherwise damaged

Make sure the folds of envelopes you load in the printer are sharply creased.

NOTE: For more information about printing on envelopes, see the documentation available with the software program you are using.

To print envelopes (Windows)

1. Load paper in the input tray. For more information, see Load paper.
2. On the **File** menu in your software, click **Print**.
3. Make sure your printer is selected.
4. Click the button that opens the **Properties** dialog box.

   Depending on your software application, this button might be called **Properties**, **Options**, **Printer Setup**, **Printer Properties**, **Printer**, or **Preferences**.

   NOTE: To set print settings for all print jobs, make the changes in the HP software provided with the printer. For more information on the HP software, see Printer management tools.

5. Select the appropriate options on the **Printing Shortcuts** or **Printing Shortcut** tab.

   To change other print settings, click the other tabs.

   For more printing tips, see Tips for successful printing.

   NOTE: If you change the paper size, be sure to load the correct paper in the input tray and set the paper size on the printer control panel.

6. Click **OK** to close the **Properties** dialog box.
7. Click **Print** or **OK** to begin printing.

To print envelopes (OS X and macOS)

1. From the **File** menu in your software, choose **Print**.
2. Make sure your printer is selected.
3. Select the appropriate envelope size from the **Paper Size** pop-up menu.

   If you do not see options on the Print dialog, click **Show Details**.

   NOTE: If you change the paper size, ensure that you have loaded the correct paper.

4. From the pop-up menu, choose **Paper Type/Quality**, and verify the paper type setting is set to **Plain Paper**.
5. Click **Print**.

Print on both sides (duplexing)

To print on both sides of the paper (Windows)

1. Load paper in the input tray. For more information, see Load paper.
2. From your software, select **Print**.
3. Make sure your printer is selected.
4. Click the button that opens the **Properties** dialog box.

   Depending on your software application, this button might be called **Properties**, **Options**, **Printer Setup**, **Printer Properties**, **Printer**, or **Preferences**.

   NOTE: To set print settings for all print jobs, make the changes in the HP software provided with the printer. For more information on the HP software, see Printer management tools.

5. On the **Printing Shortcut** tab, select a shortcut which supports the **Print On Both Sides** setting. Select an option from the **Print On Both Sides** drop-down list.

   To change other print settings, click the other tabs.

   For more printing tips, see Tips for successful printing.

   NOTE: If you change the paper size, be sure to load the correct paper in the input tray and set the paper size on the printer control panel.

6. Click **OK** to close the **Properties** dialog box.
7. Click **Print** or **OK** to begin printing.

To print on both sides of the paper (OS X and macOS)

1. From the **File** menu in your software, choose **Print**.
2. In the Print dialog, choose **Layout** from the pop-up menu.
3. Choose the type of binding you want for your two-sided pages, and then click **Print**.

Print using the maximum dpi

Use maximum dots per inch (dpi) mode to print high-quality, sharp images on photo paper.

Printing in maximum dpi takes longer than printing with other settings and requires a large amount of disk space.

To print in maximum dpi mode (Windows)

1. From your software, select **Print**.
2. Make sure your printer is selected.
3. Click the button that opens the **Properties** dialog box.

   Depending on your software application, this button might be called **Properties**, **Options**, **Printer Setup**, **Printer Properties**, **Printer**, or **Preferences**.
4. Select the appropriate options.

   #### Windows 10, Windows 8.1, and Windows 8

   - Click **Paper/Quality** tab. From the **Paper Size** drop-down list, select the appropriate paper size. From the **Paper type** drop-down list, select the appropriate paper type.
   - Click the **Advanced** tab. Select **Print in Max DPI**.

   #### Windows 7, Windows Vista, and Windows XP

   - Click **Paper/Quality** tab. From the **Media** drop-down list, select the appropriate paper type.
   - Click the **Advanced** button. Select the appropriate paper size from the **Paper Size** drop-down list. In the **Printer Features** area, select **Yes** from the **Print in Max DPI** drop-down list. Then click **OK** to close the **Advanced Options** dialog box.

   For more printing tips, see Tips for successful printing.
5. Confirm the paper orientation on the **Layout** tab, and then click **OK** to print.

To print using maximum dpi (OS X and macOS)

1. From the **File** menu in your software, choose **Print**.
2. Make sure your printer is selected.
3. Set the print options.

   If you do not see options on the Print dialog, click **Show Details**.

   - Choose the appropriate paper size in the **Paper Size** pop-up menu.

     NOTE: If you change the paper size ensure that you have loaded the correct paper.

   - Select the orientation.
4. From the pop-up menu, choose **Paper Type/Quality**, and then choose the following settings:

- **Paper Type**: The appropriate paper type
- **Quality**: **Maximum dpi**

5. Select any other print settings that you want, and then click **Print**.

Print from apps on mobile devices

Print from apps on mobile devices

You can print documents and photos directly from many of the apps on your mobile devices, on iOS, Android, Windows Mobile, Chromebook and Amazon Kindle.

To print from apps on your mobile devices

1. Make sure your printer is connected to the same network as your mobile device.
2. Enable printing on your mobile device:
   - **iOS:** Use the **Print** option from the **Share** menu. No setup is required since iOS AirPrint is preinstalled.

     NOTE: Devices running iOS 4.2 or later have AirPrint preinstalled.

   - **Android:** Download the HP Print Service Plugin (supported by most Android devices) from the Google Play Store and enable it on your device.

     NOTE: Devices running Android 4.4 or later are supported by the HP Print Service Plugin. Devices running Android 4.3 or earlier can print using the HP ePrint app, available in the Google Play Store.

   - **Windows Mobile:** Tap **Print** from the **Device** menu. No setup is required since the software is preinstalled.

     NOTE: If your printer is not listed, you might need to do a one-time setup of the printer using the **Add Printer** wizard.

   - **Chromebook:** Download and install the **HP Print for Chrome** app from the Chrome Web Store to enable both Wi-Fi and USB printing.
   - **Amazon Kindle Fire HD9 and HDX:** The first time you select **Print** on your device, the HP Print Service Plugin is automatically downloaded to enable mobile printing.

   NOTE: For detailed information about enabling printing from apps on your mobile devices, visit www.hp.com/go/mobileprinting. If a local version of this website is not available in your country/region or language, you might be directed to the HP Mobile Printing website in another country/region or language.
3. Make sure the loaded paper matches the paper settings of the printer (see Load paper for more information). Accurately setting the paper size for the paper that is loaded enables your mobile device to know what paper size it is printing.

You can also print photos and documents from the HP Smart app. For more information, see Print using the HP Smart app.

Access printer features and troubleshooting information from mobile devices

For more information about accessing printer features and troubleshooting with the HP Smart app, go to:

- **iOS/Android**: www.hp.com/go/hpsmart-help.
- **Windows**: www.hp.com/go/hpsmartwin-help.

Tips for successful printing

Software settings selected in the print driver only apply to printing, they do not apply to copying or scanning.

You can print your document on both sides of the paper. For more information, see Print on both sides (duplexing).

Ink tips

- If the print quality is not acceptable, see Printing issues for more information.
- Use Original HP cartridges.

  Original HP cartridges are designed and tested with HP printers and papers to help you easily produce great results, time after time.

  NOTE: HP cannot guarantee the quality or reliability of non-HP supplies. Product service or repairs required as a result of using a non-HP supply will not be covered under warranty.

  If you believe you purchased Original HP cartridges, go to www.hp.com/go/anticounterfeit.
- Install both the black and color cartridges correctly.

  For more information, see Replace the cartridges .
- Check the estimated ink levels in the cartridges to make sure there is sufficient ink.

  Ink level warnings and indicators provide estimates for planning purposes only.

  For more information, see Check the estimated ink levels .

  NOTE: When you receive a low-ink warning message, consider having a replacement cartridge available to avoid possible printing delays. You do not need to replace the cartridges until print quality becomes unacceptable.
- Always turn off the printer by pressing (the Power button) to allow the printer to protect the nozzles.

Paper loading tips

For more information, also see Load paper.

- Ensure the paper is loaded in the input tray properly, and set the correct media size and media type. Upon loading paper in input tray, you will be prompted to set the media size and media type.
- Load a stack of paper (not just one page). All the paper in the stack should be of the same size and type to avoid a paper jam.
- Load paper with the print-side down.
- Ensure that paper loaded in the input tray lays flat and the edges are not bent or torn.

Printer settings tips (Windows)

- To change default print settings, open the HP printer software, click **Print, Scan & Fax** , and then click **Set Preferences**. For information how to open the printer software, see Open the HP printer software (Windows).
- You can use printing shortcuts to save time setting desired printing preferences. A printing shortcut stores the settings that are appropriate for a particular type of job, so that you can set all the options with a single click. To use a shortcut, go to the **Printing Shortcuts** or **Printing Shortcut** tab, select the desired shortcut, and then click **OK**.

  To add a new printing shortcut, select an existing shortcut similar to the one you want to create, set the desired printing preferences in the **Printing Shortcuts** or **Printing Shortcut** tab, click **Save As** and enter a name, and then click **OK**.

  To delete a printing shortcut, select it, and then click **Delete**.

  NOTE: You cannot delete the default printing shortcuts.

- To understand paper and paper tray settings:
  - **Paper Size**: Select the paper size you loaded in the input tray.
  - **Paper type** or **Media**: Select the paper type you are using.
- To understand color or black and white settings:
  - **Color**: Uses ink from all cartridges for full color prints.
  - **Black & White** or **Black Ink Only**: Uses the black ink only for normal or lower quality black and white prints.
  - **High Quality Grayscale**: Uses ink from both the color and black cartridges to produce a wider range of black and grey tones for high quality black and white prints.
- To understand print quality settings:

  The print quality is measured in print resolution dots per inch (dpi). Higher dpi produces clearer and more detailed prints, but slows print speed and might use more ink.
  - **Draft**: Lowest dpi typically used when ink levels are low or when high quality prints are not needed.
  - **Normal**: Suitable for most print jobs.
  - **Best**: Better dpi than **Normal**.
  - **Print in Max DPI**: Highest dpi setting available for print quality.
  - **HP Real Life Technologies**: This feature smooths and sharpens images and graphics for improved print quality.
- To understand page and layout settings:
  - **Orientation**: Select **Portrait** for vertical prints or **Landscape** for horizontal prints.
  - **Print on Both Sides Manually**: Manually flip the pages after one side of the paper prints out so that you can print on both sides of the paper.

    - **Flip on Long Edge**: Select it if you want to flip pages by the long edge of the paper when printing on both sides of the paper.
    - **Flip on Short Edge**: Select it if you want to flip pages by the short edge of the paper when printing on both sides of the paper.
- **Booklet Layout** or **Booklet**: Allows you to print a multiple-page document as a booklet. It places two pages on each side of a sheet that can then be folded into a booklet in half size of the paper.
    - **Left binding** or **Booklet-LeftBinding**: The binding side after folded into a booklet appears at the left side. Select this option if your reading habit is from left to right.
    - **Right binding** or **Booklet-RightBinding**: The binding side after folded into a booklet appears at the right side. Select this option if your reading habit is from right to left.
- **Page Borders**: Allows you to add borders to the pages if you print the document with two or more pages per sheet.
- **Pages per Sheet Layout**: Helps you specify the order of the pages if you print the document with more than two pages per sheet.
- **Pages to Print**: Allows you to print the odd pages only, print the even pages only, or print all pages.
- **Reverse page order** or **Page Order**: Allows you to print pages from front to back or in reverse order.

Printer settings tips (OS X and macOS)

- On the Print dialog, use the **Paper Size** pop-up menu to select the size of paper loaded in the printer.
- On the Print dialog, choose the **Paper Type/Quality** pop-up menu and select the appropriate paper type and quality.

4 Copy and scan

- Copy
- Scan
- Tips for copy and scan success

Copy

To copy document photo or ID card

1. Make sure you have paper loaded in the input tray. For more information, see Load paper.
2. Place your original print-side down on the scanner glass or print-side up in the document feeder.

> **NOTE:** Do not place an ID card in the document feeder because the card may get stuck in the document feeder.

3. From the printer control panel display, touch **Copy** .
4. Select **Document** , **ID Card** , or **Photo**.
   - If you select **Document** or **ID Card** :
     1. Scroll left or right to select the number of copies, or make other settings.

        > **TIP:** To save your settings as defaults for future jobs, touch (**Copy Settings**), and then touch **Save Current Settings**.

     2. Touch **Black** or **Color**.
   - If you select **Photo**:
     1. Make sure you place your photo on the scanner glass according to the onscreen instruction.
     2. Touch **OK**.

Scan

You can scan documents, photos, and other paper types, and send them to a variety of destinations, such as a computer or an email recipient.

When scanning documents with the HP printer software, you can scan to a format that can be searched and edited.

When scanning a borderless original, use the scanner glass and not the document feeder.

NOTE: Some scan functions are only available after you have installed the HP printer software.

TIP: If you have problems scanning documents, see Scan issues.

- Scan using the HP Smart app
- Scan using HP printer software
- Scan from the printer control panel
- Scan using Webscan

Scan using the HP Smart app

You can use the HP Smart app to scan documents or photos from the printer's scanner, and you can also scan using your device camera. HP Smart includes editing tools that allow you to adjust the scanned image before saving or sharing. You can print, save your scans locally or in cloud storage, and share them via email, SMS, Facebook, Instagram, etc. To scan with HP Smart, follow the instructions provided in the appropriate section below, depending on the type of device you are using.

- Scan from a Windows 10 device
- Scan from an Android or iOS device

Scan from a Windows 10 device

To scan a document or photo using the printer scanner

1. Load the original print side up into the document feeder, or load the original print side down on the right front corner of the scanner glass.
2. Open HP Smart. For more information, see Use the HP Smart app to print, scan, and troubleshoot from an iOS, Android, or Windows 10 device.
3. Select **Scan**, and then select **Scanner**.
4. Click or tap the Settings icon to modify the basic settings.

   Select the correct source from the **Source** drop-down list, if your printer supports scan from both the document feeder and scanner glass.
5. Click or tap the Preview icon to preview and adjust the image if necessary.
6. Click or tap the Scan icon.
7. Make other adjustments if necessary:

- Click or tap the Rotate icons to rotate the file.
- Click or tap **Edit** to crop the document or image or to adjust its contrast, brightness, saturation, or angle.
- Click or tap **Add** to add more documents or photos.

8. Select the file type you want, and then click or tap the Save icon to save it or click or tap the Share icon to share it with others.

To scan a document or photo using the device camera

If your device has a camera, you can use the HP Smart app to scan a printed document or photo with the device camera. You can then use HP Smart to edit, save, print or share the image.

1. Open HP Smart. For more information, see Use the HP Smart app to print, scan, and troubleshoot from an iOS, Android, or Windows 10 device.
2. Select **Scan**, and then select **Camera**.
3. Put a document or photo in front of the camera, and then click or tap the round button at the bottom of the screen to take an image.
4. Adjust boundaries if needed. Click or tap the Apply icon.
5. Make other adjustments if necessary:
   - Click or tap the Rotate icons to rotate the file.
   - Click or tap **Edit** to crop the document or image or to adjust its contrast, brightness, saturation, or angle.
   - Click or tap **Add** to add more documents or photos.
6. Select the file type you want, and then click or tap the Save icon to save it or click or tap the Share icon to share it with others.

To edit a previously scanned document or photo

HP Smart provides editing tools, such as crop or rotate, so that you can use to adjust a previously scanned document or photo on your device.

1. Open HP Smart. For more information, see Use the HP Smart app to print, scan, and troubleshoot from an iOS, Android, or Windows 10 device.
2. Select **Scan**, and then select **Import Local**.
3. Select the document or photo that you want to adjust, and then click or tap **Open**.
4. Adjust boundaries if needed. Click or tap the Apply icon.
5. Make other adjustments if necessary:

- Click or tap the Rotate icons to rotate the file.
- Click or tap **Edit** to crop the document or image or to adjust its contrast, brightness, saturation, or angle.
- Click or tap **Add** to add more documents or photos.

6. Select the file type you want, and then click or tap the Save icon to save it or click or tap the Share icon to share it with others.

Scan from an Android or iOS device

To scan from an Android or iOS device

1. Open the HP Smart app.
2. Tap the Plus icon if you need to change to a different printer, or add a new printer.
3. Tap a scanning option you want to use .
   - If you select to scan using the camera, the built-in camera will open. Scan your photo or document using the camera.
   - If you select to scan using the printer scanner, tap the Settings icon to select the input source and change the scan settings, and then tap the Scan icon.

   NOTE: Be sure to select the correct input source if your printer supports scan from both the document feeder and scanner glass.
4. When you have finished adjusting the scanned document or photo, save, share, or print it.

Scan using HP printer software

- Scan to a computer
- Scan to email
- Scan documents as editable text
- Create a new scan shortcut (Windows)
- Change scan settings (Windows)

Scan to a computer

Before scanning to a computer, make sure you have already installed the HP recommended printer software. The printer and computer must be connected and turned on.

In addition, on Windows computers, the printer software must be running prior to scanning.

You can use the HP printer software to scan documents into editable text. For more information, see Scan documents as editable text .

To enable the scan to a computer feature (Windows)

If the printer is connected to the computer with a USB connection, the feature for scanning to computer is enabled by default and cannot be disabled.

If you are using network connection, follow these instructions if the feature has been disabled, and you wish to enable it again.

1. Open the HP printer software. For more information, see Open the HP printer software (Windows).
2. Go to the **Scan** section.
3. Select **Manage Scan to Computer**.
4. Click **Enable**.

To enable the scan to a computer feature (OS X and macOS)

The scan to a computer feature is enabled by default from the factory. Follow these instructions if the feature has been disabled, and you wish to enable it again.

1. Open HP Utility.

   NOTE: HP Utility is located in the **HP** folder in the **Applications** folder.

2. Under **Scan Settings**, click **Scan to Computer**.
3. Ensure that **Enable Scan to Computer** is selected.

To scan an original from HP printer software (Windows)

1. Load the original print side up into the document feeder, or load the original print side down on the right front corner of the scanner glass.
2. Open the HP printer software. For more information, see Open the HP printer software (Windows).
3. In the printer software, under **Print, Scan & Fax** , click **Scan**, and then click **Scan a document or Photo**.
4. Under **Scan Shortcuts**, select the type of scan you want, and then click **Scan** .

   NOTE: The initial screen allows you to review and modify basic settings. Click the **More** link at the top right corner of the Scan dialog to review and modify detailed settings.

   For more information, see Change scan settings (Windows) .

To scan an original from HP printer software (OS X and macOS)

1. Open HP Easy Scan.

   HP Easy Scan is located in the **Applications** folder.

2. Choose the type of scan profile you want.
3. Click **Scan**.

Scan to email

To scan a document or photo to email from HP printer software (Windows)

1. Load the original print side up into the document feeder, or load the original print side down on the right front corner of the scanner glass.
2. Open the HP printer software. For more information, see Open the HP printer software (Windows).

3. In the printer software, click **Scan a Document or Photo** .

4. Select the type of scan you want and then click **Scan** .

   Choose **Email as PDF** or **Email as JPEG** to open your email software with the scanned file as an attachment.

NOTE: The initial screen allows you to review and modify basic settings. Click the **More** link at the top right corner of the Scan dialog to review and modify detailed settings.

For more information, see Change scan settings (Windows) .

If **Show Viewer After Scan** is selected, you can make adjustments to the scanned image in the preview screen.

Scan documents as editable text

When scanning documents, you can use the HP software to scan documents into a format that you can search, copy, paste, and edit. This allows you to edit letters, newspaper clippings, and many other documents.

NOTE: This is an optional feature from the HP printer software. To use this feature, do not clear the **I.R.I.S OCR** check box on the **Software Selections** screen when you install the HP printer software. Otherwise, visit 123.hp.com to download and reinstall the HP printer software.

- Scan documents as editable text
- Guidelines for scanning documents as editable text

Scan documents as editable text

Use the following guidelines for scanning documents as editable text.

To scan a document to editable text (Windows)

1. Load the original print side up into the document feeder, or load the original print side down on the right front corner of the scanner glass.
2. Open the HP printer software. For more information, see Open the HP printer software (Windows).
3. In the printer software, under **Print, Scan & Fax** , click **Scan** , and then click **Scan a Document or Photo** .
4. Under **Scan Shortcuts**, select **Save as Editable Text (OCR)** and then click **Scan** .

NOTE: The initial screen allows you to review and modify basic settings. Click the **More** link at the top right corner of the Scan dialog to review and modify detailed settings.

For more information, see Change scan settings (Windows) .

If **Show Viewer After Scan** is selected, you can make adjustments to the scanned image in the preview screen.

To scan documents as editable text (OS X and macOS)

1. Load your original print-side down on the scanner glass or print-side up in the document feeder.
2. Open HP Easy Scan.

   HP Easy Scan is located in the **Applications** folder.

3. Click the **Scan** button.

   A dialog appears requesting confirmation of your scanning device and the scan settings preset.

4. Follow the onscreen instructions to complete the scan.
5. When all of the pages have been scanned, select **Save** from the **File** menu.
6. Select the type of editable text you want from the **Format** pop-up menu.
7. Click **Save**.

Guidelines for scanning documents as editable text

Use the following guidelines to ensure the software successfully converts your documents.

- **Make sure the scanner glass or document feeder window is clean.**

  Smudges or dust on the scanner glass or document feeder window can prevent the software from converting the document to editable text

- **Make sure the document is loaded correctly.**

  Make sure the original is properly loaded and aligned with the marking on the right front corner of the glass. Make sure that the document is not skewed.

- **Make sure the text on the document is clear.**

  To successfully convert the document to editable text, the original must be clear and of high quality.

  The following conditions can cause the software to not convert the document successfully:

  — The text on the original is faint or wrinkled.

  — The text is too small.

  — The structure of the document is too complex.

  — The text is tightly spaced. For example, if the text that the software converts has missing or combined characters, "rn" might appear as "m."

  — The text is on a colored background. Colored backgrounds can cause images in the foreground to blend too much.

- **Choose the correct profile.**

  Be sure to select a shortcut or preset that allows scanning as editable text. These options use scan settings designed to maximize the quality of your OCR scan.

  Windows: Use the **Editable Text (OCR)** or **Save as PDF** shortcuts.

  OS X and macOS: Use the **Documents with Text** preset.

- **Save your file in the correct format.**

  If you want to extract just the text from the document, without any of the formatting of the original, select a plain text format, such as **Text (.txt)** or **TXT**.

  If you want to extract the text, as well as some of the formatting of the original, select Rich Text Format, such as **Rich Text (.rtf)** or **RTF**, or searchable PDF format, such as **Searchable PDF (.pdf)** or **Searchable PDF** .

Create a new scan shortcut (Windows)

You can create your own scan shortcut to make scanning easier. For example, you might want to regularly scan and save photos in PNG format, rather than JPEG.

1. Load the original print side up into the document feeder, or load the original print side down on the right front corner of the scanner glass.
2. Open the HP printer software. For more information, see Open the HP printer software (Windows).
3. In the printer software, under **Print, Scan & Fax** , click **Scan** , and then click **Scan a Document or Photo** .
4. Click **Create New Scan Shortcut** .
5. Enter a descriptive name, choose an existing shortcut on which to base your new shortcut, and then click **Create** .

   For example, if you are creating a new shortcut for photos, choose either **Save as JPEG** or **Email as JPEG** . This makes available the options for working with graphics when scanning.
6. Change the settings for your new shortcut to meet your needs, and then click the save icon to the right of the shortcut.

NOTE: The initial screen allows you to review and modify basic settings. Click the **More** link at the top right corner of the Scan dialog to review and modify detailed settings.

For more information, see Change scan settings (Windows) .

Change scan settings (Windows)

You can modify any of the scan settings either for a singular use or save the changes to use permanently. These settings include options such as page size and orientation, scan resolution, contrast, and the folder location for saved scans.

1. Load the original print side up into the document feeder, or load the original print side down on the right front corner of the scanner glass.
2. Open the HP printer software. For more information, see Open the HP printer software (Windows).
3. In the printer software, under **Print, Scan & Fax** , click **Scan** , and then click **Scan a Document or Photo** .
4. Click the **More** link in the top right corner of the HP Scan dialog.

   The detailed settings pane appears on the right. The left column summarizes the current settings for each section. The right column allows you to change the settings in the highlighted section.
5. Click each section at the left of the detailed settings pane to review the settings in that section.

   You can review and change most settings using drop-down menus.

   Some settings allow greater flexibility by displaying a new pane. These are indicated by a + (plus sign) at the right of the setting. You must either accept or cancel any changes on this pane to return to the detailed settings pane.
6. When you have finished changing settings, do one of the following.

- Click **Scan** . You are prompted to save or reject the changes to the shortcut after the scan is finished.
- Click the save icon to the right of the shortcut. It saves the changes into the shortcut so that you can reuse them next time. Otherwise, the changes only affect the current scan. Then click **Scan** .

Learn more about using the HP Scan software. Click here to go online for more information. At this time, this website might not be available in all languages.

- Customize scan settings, such as image file type, scan resolution, and contrast levels.
- Scan to network folders and cloud drives.
- Preview and adjust images before scanning.

Scan from the printer control panel

Scan to a computer

To scan an original from the printer control panel

1. Load the original print side up into the document feeder, or load the original print side down on the right front corner of the scanner glass.
2. Touch **Scan** .
3. Touch a computer that you want to scan to.
4. Choose the type of scan you want.
5. Touch **OK**.

Scan to a memory device

You can scan directly to a memory card or USB flash drive from the printer control panel without using a computer or the HP printer software provided with the printer.

To scan an original to a memory device from the printer control panel

1. Load the original print side up into the document feeder, or load the original print side down on the right front corner of the scanner glass.
2. Touch **Scan** , and then select **Memory Device**.

NOTE: If you insert both memory card and USB flash drive into the printer, you will need to select a memory device.

3. Insert a memory device.

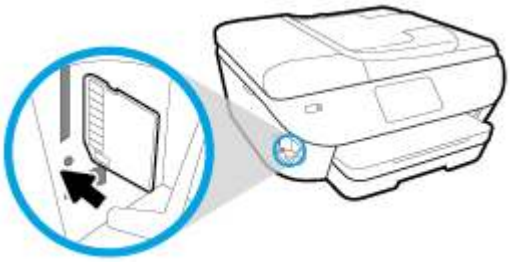

4. Make changes to scan options, if needed.
5. Touch **Save**.

Scan using Webscan

Webscan is a feature of the embedded web server that lets you scan photos and documents from your printer to your computer using a web browser.

This feature is available even if you did not install the printer software on your computer.

For more information, see Embedded web server.

NOTE: By default, Webscan is off. You can enable this feature from the EWS.

If you are unable to open Webscan in the EWS, your network administrator might have turned it off. For more information, contact your network administrator or the person who set up your network.

To enable Webscan

1. Open the embedded web server. For more information, see Embedded web server.
2. Click the **Settings** tab.
3. In the **Security** section, click **Administrator Settings**.
4. Select **Webscan from EWS** to enable Webscan.
5. Click **Apply**.

To scan using Webscan

Scanning using Webscan offers basic scan options. For additional scan options or functionality, see Scan using HP printer software .

1. Load the original print side up into the document feeder, or load the original print side down on the right front corner of the scanner glass.
2. Open the embedded web server. For more information, see Embedded web server.
3. Click the **Scan** tab.
4. Click **Webscan** in the left pane, change any settings, and then click **Start Scan** .

TIP: To scan documents as editable text, you must install the HP software included with the printer. For more information, see Scan documents as editable text .

Tips for copy and scan success

Use the following tips to copy and scan successfully.

- Keep the glass and the back of the lid clean. The scanner interprets anything it detects on the glass as part of the image.
- Load your original print-side down on the scanner glass and align it with the marking on the right front corner of the glass.
- To make a large copy of a small original, scan the original into the computer, resize the image in the scanning software, and then print a copy of the enlarged image.
- If you want to adjust scan size, output type, scan resolution, or file type, and so on, start the scan from the printer software.
- To avoid incorrect or missing scanned text, make sure the brightness is set appropriately in the software.
- If you want to scan a document with several pages into one file instead of multiple files, start the scan with the printer software instead of selecting **Scan** from the printer display.

5 Fax

You can use the printer to send and receive faxes, including color faxes. You can schedule faxes to be sent at a later time within 24 hours and set up phone book contacts to send faxes quickly and easily to frequently used numbers. From the printer control panel, you can also set a number of fax options, such as resolution and the contrast between lightness and darkness on the faxes you send.

NOTE: Before you begin faxing, make sure you have set up the printer correctly for faxing. You can verify the fax is set up correctly by running the fax setup test from the printer control panel.

- Send a fax
- Receive a fax
- Set up phone book contacts
- Change fax settings
- Fax and digital phone services
- Fax on Voice over Internet Protocol
- Use reports
- Additional fax setup

Send a fax

You can send a fax in a variety of ways, depending on your situation or need.

- Send a standard fax
- Send a standard fax from the computer
- Send a fax from a phone
- Send a fax using monitor dialing
- Send a fax using printer memory
- Send a fax to multiple recipients
- Send a fax in Error Correction Mode

Send a standard fax

You can easily send a single- or multiple-page black-and-white or color fax by using the printer control panel.

NOTE: Send single-page faxes by placing the original on the glass. Send multiple page faxes using the document feeder.

NOTE: If you need printed confirmation that your faxes were successfully sent, fax confirmation must be enabled.

To send a standard fax from the printer control panel

1. Load the original print side up into the document feeder, or load the original print side down on the right front corner of the scanner glass.
2. From the printer control panel display, touch **Fax** .
3. Touch **Send Now**.
4. Enter the fax number by using the keypad or by selecting from the phone book

   TIP: To add a pause in the fax number you are entering, touch ***** repeatedly, until a dash (**-**) appears on the display.

5. Touch **Black** or **Color** .

   If the printer detects an original loaded in the document feeder, it sends the document to the number you entered.

   TIP: If the recipient reports issues with the quality of the fax, try changing the resolution or contrast of your fax.

Send a standard fax from the computer

You can fax a document directly from your computer without printing it first.

To use this feature, make sure you have installed the HP printer software on your computer, the printer is connected to a working telephone line, and the fax function is set up and functioning correctly.

To send a standard fax from the computer (Windows)

1. Open the document on your computer that you want to fax.
2. On the **File** menu in your software application, click **Print**.
3. From the **Name** list, select the printer that has **"fax"** in the name.
4. To change settings (such as selecting to send the document as a black fax or a color fax), click the button that opens the **Properties** dialog box. Depending on your software application, this button might be called **Properties**, **Options**, **Printer Setup**, **Printer**, or **Preferences**.
5. After you have changed any settings, click **OK**.
6. Click **Print** or **OK**.
7. Enter the fax number and other information for the recipient, change any further settings for the fax, and then click **Send Fax**. The printer begins dialing the fax number and faxing the document.

To send a standard fax from the computer (OS X and macOS)

1. Open the document on your computer that you want to fax.
2. From the **File** menu in your software, click **Print**.
3. Select the printer that has **"(Fax)"** in the name.
4. Enter a fax number or a name from your Contacts that already has a fax number entry.
5. When you have finished filling out the fax information, click **Fax**.

Send a fax from a phone

You can send a fax using your telephone extension. This allows you to talk with the intended recipient before sending the fax.

To send a fax from an extension phone

1. Load the original print side up into the document feeder, or load the original print side down on the right front corner of the scanner glass.
2. Dial the number by using the keypad on the phone that is connected to the printer.

   If the recipient answers the telephone, inform the recipient that they should receive the fax on their fax machine after they hear fax tones. If a fax machine answers the call, you will hear fax tones from the receiving fax machine.
3. From the printer control panel display, touch **Fax** .
4. Touch **Send Now**.
5. When you are ready to send the fax, touch **Black** or **Color** .

   The telephone is silent while the fax is transmitting. If you want to speak to the recipient later, remain on the line until the transmission is complete. If you were finished talking to the recipient, you can hang up the telephone as soon as the fax begins transmitting.

Send a fax using monitor dialing

When you send a fax using monitor dialing, you can hear the dial tones, telephone prompts, or other sounds through the speakers on the printer. This enables you to respond to prompts while dialing, as well as control the pace of your dialing.

TIP: If you are using a calling card and do not enter your PIN fast enough, the printer might start sending fax tones too soon and cause your PIN not to be recognized by the calling card service. If this is the case, create a phone book contact to store the PIN for your calling card.

NOTE: Make sure the volume is turned on to hear a dial tone.

To send a fax using monitor dialing from the printer control panel

1. Load the original print side up into the document feeder, or load the original print side down on the right front corner of the scanner glass.
2. From the printer control panel display, touch **Fax** .
3. Touch **Send Now**.
4. Touch **Black** or **Color** .
5. When you hear the dial tone, enter the number by using the keypad on the printer control panel.
6. Follow any prompts that might occur.

TIP: If you are using a calling card to send a fax and you have your calling card PIN stored as a phone book contact, when prompted to enter your PIN, touch (**Phone Book**), and then touch (**Local Phone Book**) to select the phone book contact where you have your PIN stored.

Your fax is sent when the receiving fax machine answers.

Send a fax using printer memory

You can scan a black-and-white fax into memory and then send the fax from memory. This feature is useful if the fax number you are trying to reach is busy or temporarily unavailable. The printer scans the originals into memory and sends them once it is able to connect to the receiving fax machine. After the printer scans the pages into memory, you can immediately remove the originals from the document feeder tray or scanner glass.

NOTE: You can only send a black-and-white fax from memory.

To send a fax using printer memory

1. Ensure that **Scan and Fax Method** is turned on.
   a. From the printer control panel display, touch **Fax** .
   b. Touch **Setup** , and then touch **Preferences** .
   c. Turn on **Scan and Fax Method**.
2. Load the original print side up into the document feeder, or load the original print side down on the right front corner of the scanner glass.
3. From the printer control panel display, touch **Fax** .

4. Touch **Send Now**.
5. Enter the fax number by using the keypad.

   Or touch (**Phone Book**), and then touch (**Call History**), or (**Local Phone Book**) to select a number or group to dial.
6. Touch **Send Fax** .

   The printer scans the originals into memory and sends the fax when the receiving fax machine is available.

Send a fax to multiple recipients

You can send a fax to multiple recipients by creating a group phone book contact made up of two or more individual recipients.

To send a fax to multiple recipients using group phone book

1. Load the original print side up into the document feeder, or load the original print side down on the right front corner of the scanner glass.
2. From the printer control panel display, touch **Fax** .
3. Touch **Send Now**.
4. Touch (**Phone Book**), and then touch (**Local Phone Book**)
5. Touch and select (**Group**) to switch to the group phone book.
6. Touch the name of the group that you want to send.
7. Touch **Send Fax** .

   Printer sends the document to all the numbers in the selected group.

TIP: If the recipient reports issues with the quality of the fax, try changing the resolution or contrast of your fax.

Send a fax in Error Correction Mode

Error Correction Mode (ECM) prevents loss of data due to poor phone lines by detecting errors that occur during transmission and automatically requesting retransmission of the erroneous portion. Phone charges are unaffected, or might even be reduced, on good phone lines. On poor phone lines, ECM increases sending time and phone charges, but sends the data much more reliably. The default setting is **On** . Turn ECM off only if it increases phone charges substantially, and if you can accept poorer quality in exchange for reduced charges.

If you turn ECM off:

- The quality and transmission speed of faxes you send and receive are affected.
- The **Speed** is automatically set to **Medium** .
- You can no longer send or receive faxes in color.

To change the ECM setting from the control panel

1. From the printer control panel display, touch **Fax** .
2. Touch **Setup** .
3. Touch **Preferences** .
4. Scroll to **Error Correction Mode** and turn the feature on or off.

Receive a fax

You can receive faxes automatically or manually. If you turn off the **Auto Answer** option, you must receive faxes manually. If you turn on the **Auto Answer** option (the default setting), the printer automatically answers incoming calls and receives faxes after the number of rings that are specified by the **Rings to Answer** setting. (The default **Rings to Answer** setting is five rings.)

If you receive a Legal-size or larger fax and the printer is not currently set to use Legal-size paper, the printer reduces the fax so that it fits on the paper that is loaded. If you have disabled the **Automatic Reduction** feature, the printer prints the fax on two pages.

NOTE: If you are copying a document when a fax arrives, the fax is stored in the printer memory until the copying finishes.

- Receive a fax manually
- Set up backup fax
- Reprint received faxes from memory
- Forward faxes to another number
- Set automatic reduction for incoming faxes
- Block unwanted fax numbers

Receive a fax manually

When you are on the phone, the person you are speaking with can send you a fax while you are still connected. You can pick up the handset to talk or listen for fax tones.

You can receive faxes manually from a phone that is directly connected to the printer (on the 2-EXT port).

To receive a fax manually

1. Make sure the printer is turned on and you have paper loaded in the main tray.
2. Remove any originals from the document feeder tray.
3. Set the **Rings to Answer** setting to a high number to allow you to answer the incoming call before the printer answers. Or, turn off the **Auto Answer** setting so that the printer does not automatically answer incoming calls.
4. If you are currently on the phone with the sender, instruct the sender to press **Start** on their fax machine.
5. Do the following when you hear fax tones from a sending fax machine.
   a. From the printer control panel display, touch **Fax** , touch **Send and Receive**, and then touch **Receive Now**.
   b. After the printer begins to receive the fax, you can hang up the phone or remain on the line. The phone line is silent during fax transmission.

Set up backup fax

Depending on your preference and security requirements, you can set up the printer to store all the faxes it receives, only the faxes it receives while the printer is in an error condition, or none of the faxes it receives.

To set backup fax from the printer control panel

1. From the printer control panel display, touch **Fax** .
2. Touch **Setup** .
3. Touch **Preferences** .
4. Touch **Backup Fax Reception**.
5. Touch the required setting.

On	The default setting. When **Backup fax** is **On** , the printer stores all received faxes in memory. This enables you to reprint up to 30 of the most recently printed faxes if they are still saved in memory. **NOTE:** When printer memory is low, it overwrites the oldest, printed faxes as it receives new faxes. If the memory becomes full of unprinted faxes, the printer stops answering incoming fax calls. **NOTE:** If you receive a fax that is too large, such as a very detailed color photo, it might not be stored in memory due to memory limitations.
On Error Only	Causes the printer to store faxes in memory only if an error condition exists that prevents the printer from printing the faxes (for example, if the printer runs out of paper). The printer continues to store incoming faxes as long as there is memory available. (If the memory becomes full, the printer stops answering incoming fax calls.) When the error condition is resolved, the faxes stored in memory print automatically, and then they are deleted from memory.
Off	Faxes are never stored in memory. For example, you might want to turn off **Backup fax** for security purposes. If an error condition occurs that prevents the printer from printing (for example, the printer runs out of paper), the printer stops answering incoming fax calls.

Reprint received faxes from memory

The received faxes that are not printed are stored in memory.

NOTE: After the memory becomes full, the printer cannot receive the new fax until you print or delete the faxes from memory. You might also want to delete the faxes in memory for security or privacy purposes.

You can reprint up to 30 of the most recently printed faxes, if they are still in memory. For example, you might need to reprint your faxes if you lost the copy of your last printout.

To reprint faxes in memory from the printer control panel

1. Make sure you have paper loaded in the main tray. For more information, see Load paper.
2. From the printer control panel display, touch **Fax** .
3. Touch **Reprint**.

   The faxes are listed in the reverse order from which they were received with the most recently received fax printed first, and so on.
4. Touch **Received Fax List**.
5. Touch to select a fax, and then touch **Print**.

   If you want to stop reprinting the faxes in memory, touch (Cancel).

Forward faxes to another number

You can set up the printer to forward your faxes to another fax number. All faxes are forwarded in black and white, regardless of how they were originally sent.

HP recommends that you verify the number you are forwarding to is a working fax line. Send a test fax to make sure the fax machine is able to receive your forwarded faxes.

To forward faxes from the printer control panel

1. From the printer control panel display, touch **Fax** .
2. Touch **Setup** .
3. Touch **Preferences** .
4. Touch **Fax Forwarding**.
5. Touch **On (Print and Forward)** to print and forward the fax, or select **On (Forward)** to forward the fax.

NOTE: If the printer is not able to forward the fax to the designated fax machine (for example, if it is not turned on), the printer prints the fax. If you set up the printer to print error reports for received faxes, it also prints an error report.

6. At the prompt, enter the number of the fax machine intended to receive the forwarded faxes, and then touch **Done** . Enter the required information for each of the following prompts: start date, start time, end date, and end time.
7. Fax forwarding is activated. Touch **OK** to confirm.

   If the printer loses power when fax forwarding is set up, it saves the fax forwarding setting and phone number. When the power is restored to the printer, the fax forwarding setting is still **On** .

NOTE: You can cancel fax forwarding by selecting **Off** from the **Fax Forwarding** menu.

Set automatic reduction for incoming faxes

The **Automatic Reduction** setting determines what the printer does if it receives a fax that is too large for the loaded paper size. This setting is turned on by default, so the image of the incoming fax is reduced to fit on one page, if possible. If this feature is turned off, information that does not fit on the first page is printed on a second page. **Automatic Reduction** is useful when you receive a fax larger than A4/Letter-size fax and A4/Letter-size paper is loaded in the input tray.

To set automatic reduction from the printer control panel

1. From the printer control panel display, touch **Fax** .
2. Touch **Setup** .
3. Touch **Preferences** .
4. Scroll to **Automatic Reduction** and turn the feature on or off.

Block unwanted fax numbers

If you subscribe to a caller ID service through your phone provider, you can block specific fax numbers so the printer does not receive faxes received from those numbers. When an incoming fax call is received, the printer compares the number to the list of junk fax numbers to determine if the call should be blocked. If the number

matches a number in the blocked fax numbers list, the fax is not received. (The maximum number of fax numbers you can block varies by model.)

NOTE: This feature is not supported in all countries/regions. If it is not supported in your country/region, **Junk Fax Blocking** does not appear in the **Preferences** menu.

NOTE: If no phone numbers are added in the Caller ID list, it is assumed that you are not subscribed to a Caller ID service.

You can block specific fax numbers by adding them to the junk fax list, unblock these numbers by removing them from the junk fax list, and print a list of blocked junk fax numbers.

To add a number to the junk fax list

1. From the printer control panel display, touch **Fax** .
2. Touch **Setup** .
3. Touch **Preferences** .
4. Touch **Junk Fax Blocking** .
5. Touch (Plus Sign).
6. Do one of the following.
   - To select a fax number to block from the call history list, touch (**Call History**).
   - Manually enter a fax number to block, and touch **Add**.

NOTE: Make sure you enter the fax number as it appears on the control panel display, and not the fax number that appears on the fax header of the received fax, as these numbers can be different.

To remove numbers from the junk fax list

If you no longer want to block a fax number, you can remove it from the junk fax list.

1. From the printer control panel display, touch **Fax** .
2. Touch **Setup** .
3. Touch **Preferences** .
4. Touch **Junk Fax Blocking** .
5. Touch the number you want to remove, and then touch **Remove**.

To print a junk fax list

1. From the printer control panel display, touch **Fax** .
2. Touch **Setup** , and then touch **Reports** .
3. Touch **Print Fax Reports** .
4. Touch **Junk Fax Report**.
5. Touch **Print** to begin printing.

Set up phone book contacts

You can set up frequently used fax numbers as phone book contacts. This lets you quickly dial those numbers using the printer control panel.

TIP: In addition to creating and managing phone book contacts from the printer control panel, you can also use tools available on your computer, such as the HP software included with the printer and the printer EWS. For more information, see Printer management tools.

- Create and edit a phone book contact
- Create and edit a group phone book contact
- Delete phone book contacts

Create and edit a phone book contact

You can store fax numbers as phone book contacts.

To set up phone book contacts

1. From the printer control panel display, touch **Fax** .
2. Touch **Phone Book** .
3. Touch (**Plus Sign**) to add a contact.
4. Touch **Name**, and then enter the name of the phone book contact, and then touch **Done** .
5. Touch **Fax Number**, and then enter the fax number for the phone book contact, and then touch **Done** .

NOTE: Be sure to include any pauses or other required numbers, such as an area code, an access code for numbers outside a PBX system (usually a 9 or 0), or a long-distance prefix.

6. Touch **Add**.

To change phone book contacts

1. From the printer control panel display, touch **Fax** .
2. Touch **Phone Book** .
3. Touch the phone book contact that you want to edit.
4. Touch **Name** and then edit the name of the Phone Book contact, and then touch **Done** .
5. Touch **Fax Number** and edit the fax number for the phone book contact, and then touch **Done** .

NOTE: Be sure to include any pauses or other required numbers, such as an area code, an access code for numbers outside a PBX system (usually a 9 or 0), or a long-distance prefix.

6. Touch **Done** .

Create and edit a group phone book contact

You can store groups of fax numbers as group phone book contacts.

To set up group phone book contacts

NOTE: Before you can create a group phone book contact, you must have already created at least one phone book contact.

1. From the printer control panel display, touch **Fax** .
2. Touch **Phone Book** .
3. Touch , touch (**Group**), and then touch (**Plus Sign**) to add a group.
4. Touch **Name**, and then enter the name of the group, and then touch **Done** .
5. Touch **Number of Members**, select the phone book contacts you want to include in this group, and then touch **Select**.
6. Touch **Create**.

To change group phone book contacts

1. From the printer control panel display, touch **Fax** .
2. Touch **Phone Book** .
3. Touch , touch (**Group**), and then touch (**Plus Sign**) to add a group.
4. Touch the group phone book contact that you want to edit.
5. Touch **Name** and then edit the name of the group phone book contact, and then touch **Done** .
6. Touch **Number of Members**.
7. If you want to add a contact to the group, touch (**Plus Sign**). Touch a contact name, and then touch **Select**.

   If you want to remove a contact from the group, touch to deselect the contact.
8. Touch **Done** .

Delete phone book contacts

You can delete phone book contacts or group phone book contacts.

1. From the printer control panel display, touch **Fax** .
2. Touch **Phone Book** .
3. Touch the name of the phone book contact you want to delete.
4. Touch **Delete**.
5. Touch **Yes** to confirm.

Change fax settings

After completing the steps in the getting started guide that came with the printer, use the following steps to change the initial settings or to configure other options for faxing.

- Configure the fax header
- Set the answer mode (Auto answer)
- Set the number of rings before answering
- Change the answer ring pattern for distinctive ring
- Set the dial type
- Set the redial options
- Set the fax speed
- Set the fax sound volume

Configure the fax header

The fax header prints your name and fax number on the top of every fax you send. HP recommends that you set up the fax header by using the HP software provided with the printer. You can also set up the fax header from the printer control panel, as described here.

NOTE: In some countries/regions, the fax header information is a legal requirement.

To set or change the fax header

1. From the printer control panel display, touch **Fax** .
2. Touch **Setup** , and then touch **Preferences** .
3. Touch **Fax Header**.
4. Enter your personal or company name, and then touch **Done** .
5. Enter your fax number, and then touch **Done** .

Set the answer mode (Auto answer)

The answer mode determines whether the printer answers incoming calls.

- Turn on the **Auto Answer** setting if you want the printer to answer faxes **automatically**. The printer answers all incoming calls and faxes.
- Turn off the **Auto Answer** setting if you want to receive faxes **manually**. You must be available to respond in person to the incoming fax call or else the printer does not receive faxes.

To set the answer mode

1. From the printer control panel display, touch **Fax** .
2. Touch **Setup** , and then touch **Preferences** .
3. Touch **Auto Answer** to turn it on or off.

You may also access this feature by pressing (the **Fax Status** button) on the Home screen.

Set the number of rings before answering

If you turn on the **Auto Answer** setting, you can specify how many rings occur before incoming calls are automatically answered.

The **Rings to Answer** setting is important if you have an answering machine on the same phone line as the printer, because you want the answering machine to answer the phone before the printer does. The number of rings to answer for the printer should be greater than the number of rings to answer for the answering machine.

For example, set your answering machine to a low number of rings and the printer to answer in the maximum number of rings. (The maximum number of rings varies by country/region.) In this setup, the answering machine answers the call and the printer monitors the line. If the printer detects fax tones, it receives the fax. If the call is a voice call, the answering machine records the incoming message.

To set the number of rings before answering

1. From the printer control panel display, touch **Fax** .
2. Touch **Setup** , and then touch **Preferences** .
3. Touch **Rings to Answer** .
4. Touch to set the number of rings.
5. Touch **Done** .

Change the answer ring pattern for distinctive ring

Many phone companies offer a distinctive ring feature that allows you to have several phone numbers on one phone line. When you subscribe to this service, each number is assigned a different ring pattern. You can set up the printer to answer incoming calls that have a specific ring pattern.

If you connect the printer to a line with distinctive ring, have your telephone company assign one ring pattern to voice calls and another ring pattern to fax calls. HP recommends that you request double or triple rings for a fax number. When the printer detects the specified ring pattern, it answers the call and receives the fax.

TIP: You can also use the Ring Pattern Detection feature in the printer control panel to set distinctive ring. With this feature, the printer recognizes and records the ring pattern of an incoming call and, based on this call, automatically determines the distinctive ring pattern assigned by your telephone company to fax calls.

If you do not have a distinctive ring service, use the default ring pattern, which is **All Standard Rings** .

NOTE: The printer cannot receive faxes when the main phone number is off the hook.

To change the answer ring pattern for distinctive ring

1. Ensure that the printer is set to answer fax calls automatically.

   For more information, see Set the answer mode (Auto answer).
2. From the printer control panel display, touch **Fax** .
3. Touch **Setup** , and then select **Preferences** .

4. Touch **Distinctive Ring** .
5. Touch one ring pattern and then follow the on-screen instruction.

NOTE: If you are using a PBX phone system that has different ring patterns for internal and external calls, you must call the fax number from an external number.

Set the dial type

Use this procedure to set tone-dialing or pulse-dialing mode. The factory-set default is **Tone**. Do not change the setting unless you know that your phone line cannot use tone dialing.

NOTE: The pulse-dialing option is not available in all countries/regions.

To set the dial type

1. From the printer control panel display, touch **Fax** .
2. Touch **Setup** , and then touch **Preferences** .
3. Touch **Dial Type**.
4. Touch to select **Tone** or **Pulse**.

Set the redial options

If the printer was unable to send a fax because the receiving fax machine did not answer or was busy, the printer attempts to redial based on the settings for the redial options. Use the following procedure to turn the options on or off.

- **Busy redial**: If this option is turned on, the printer redials automatically if it receives a busy signal. The default is **On** .
- **No answer redial**: If this option is turned on, the printer redials automatically if the receiving fax machine does not answer. The default is **Off** .
- **Connection problem redial**: If this option is turned on, the printer redials automatically if there has been a problem connecting with the receiving fax machine. Connection problem redial works only for sending faxes from memory. The default is **On** .

To set the redial options

1. From the printer control panel display, touch **Fax** .
2. Touch **Setup** , and then touch **Preferences** .
3. Touch **Auto Redial** .
4. Turn on or off **Busy Redial** , **No Answer Redial** , or **Connection Problem Redial** .

Set the fax speed

You can set the fax speed used to communicate between your printer and other fax machines when sending and receiving faxes.

If you use one of the following, setting the fax speed to a slower speed might be required:

- An Internet phone service
- A PBX (private branch exchange) system
- Fax on Voice over Internet Protocol (VoIP)
- An integrated services digital network (ISDN) service

If you experience problems sending and receiving faxes, try using a slower **Speed** . The following table provides the available fax speed settings.

Fax speed setting	Fax speed
Fast	v.34 (33600 bps)
Medium	v.17 (14400 bps)
Slow	v.29 (9600 bps)

To set the fax speed

1. From the printer control panel display, touch **Fax** .
2. Touch **Setup** , and then touch **Preferences** .
3. Touch **Speed** .
4. Touch to select an option.

Set the fax sound volume

You can change the volume of fax sounds.

To set the fax sound volume

1. From the printer control panel display, touch **Fax** .
2. Touch **Setup** , and then touch **Preferences** .
3. Touch **Fax Volume**.
4. Touch to select **Soft**, **Loud**, or **Off** .

You may also access this feature by pressing (the **Fax Status** button) on the Home screen.

Fax and digital phone services

Many telephone companies provide their customers with digital phone services, such as the following:

- DSL: A Digital subscriber line (DSL) service through your telephone company. (DSL might be called ADSL in your country/region.)
- PBX: A private branch exchange (PBX) phone system.
- ISDN: An integrated services digital network (ISDN) system.
- VoIP: A low-cost phone service that allows you to send and receive faxes with your printer by using the Internet. This method is called Fax on Voice over Internet Protocol (VoIP).

  For more information, see Fax on Voice over Internet Protocol.

HP printers are designed specifically for use with traditional analog phone services. If you are in a digital phone environment (such as DSL/ADSL, PBX, or ISDN), you might need to use digital-to-analog filters or converters when setting up the printer for faxing.

NOTE: HP does not guarantee that the printer will be compatible with all digital service lines or providers, in all digital environments, or with all digital-to-analog converters. It is always recommended that you discuss with the telephone company directly for the correct setup options based on their line services provided.

Fax on Voice over Internet Protocol

You might be able to subscribe to a low cost phone service that allows you to send and receive faxes with your printer by using the Internet. This method is called Fax on Voice over Internet Protocol (VoIP).

The following are indications you probably use a VoIP service.

- Dial a special access code along with the fax number.
- Have an IP converter box that connects to the Internet and provides analog phone ports for the fax connection.

NOTE: You can only send and receive faxes by connecting a phone cord to the port labeled "1-LINE" on the printer. This means that your connection to the Internet must be done either through a converter box (which supplies regular analog phone jacks for fax connections) or your telephone company.

TIP: Support for traditional fax transmission over any Internet protocol telephone systems are often limited. If you experience problems faxing, try using a slower fax speed or disabling the fax error-correction mode (ECM). However, if you turn off ECM, you cannot send and receive color faxes.

If you have questions about Internet faxing, contact your Internet faxing services support department or your local service provider for further assistance.

Use reports

You can set up the printer to print error reports and confirmation reports automatically for each fax you send and receive. You can also manually print system reports as required; these reports provide useful system information about the printer.

By default, the printer is set to print a report only if there is a problem sending or receiving a fax. A confirmation message that indicates whether a fax was successfully sent appears briefly on the control panel display after each transaction.

NOTE: If the reports are not legible, you can check the estimated ink levels from the control panel or the HP software. For more information, see Check the estimated ink levels .

NOTE: Ink level alerts and indicators provide estimates for planning purposes only. When you receive a low-ink alert, consider having a replacement cartridge available to avoid possible printing delays. You do not need to replace the cartridges until the print quality becomes unacceptable.

NOTE: Ensure that the printheads and cartridges are in good conditions and installed properly. For more information, see Work with cartridges.

This section contains the following topics:

- Print fax confirmation reports
- Print fax error reports
- Print and view the fax log
- Clear the fax log
- Print the details of the last fax transaction
- Print a Caller ID Report
- View the Call History

Print fax confirmation reports

You can print a confirmation report either when a fax is sent, or when a fax is received or when any fax is sent or received. The default setting is **On (Fax Send)**. When turned off, a confirmation message appears briefly on the control panel after each fax is sent or received.

To enable fax confirmation

1. From the printer control panel display, touch **Fax** .
2. Touch **Setup** .
3. Touch **Reports** and touch **Fax Confirmation** .
4. Touch to select one of the following options.

Off	Does not print a fax confirmation report when you send and receive faxes successfully. This is the default setting.
On (Fax Send)	Prints a fax confirmation report for every fax you send.

On (Fax Receive)	Prints a fax confirmation report for every fax you receive.
On (Fax Send and Fax Receive)	Prints a fax confirmation report for every fax you send and receive.

To include an image of the fax on the report

1. From the printer control panel display, touch **Fax** .
2. Touch **Setup** .
3. Touch **Reports** and touch **Fax Confirmation** .
4. Touch **On (Fax Send)** or **On (Fax Receive)** or **On (Fax Send and Fax Receive)** .
5. Touch **Fax confirmation with image**.

Print fax error reports

You can configure the printer so that it automatically prints a report when there is an error during transmission or reception.

To set the printer to print fax error reports automatically

1. From the printer control panel display, touch **Fax** .
2. Touch **Setup** .
3. Touch **Reports** and touch **Fax Error Reports**.
4. Touch to select one of the following.

On (Fax Send and Fax Receive)	Prints whenever a fax error occurs.
Off	Does not print any fax error reports.
On (Fax Send)	Prints whenever a transmission error occurs. This is the default setting.
On (Fax Receive)	Prints whenever a receiving error occurs.

Print and view the fax log

You can print a log of faxes that have been received and sent by the printer.

To print the fax log from the printer control panel

1. From the printer control panel display, touch **Fax** .
2. Touch **Setup** , and then touch **Reports** .
3. Touch **Print Fax Reports** .
4. Touch **Last 30 Transactions Fax Logs** .
5. Touch **Print** to begin printing.

Clear the fax log

Clearing the fax log also deletes all faxes stored in memory.

To clear the fax log

1. From the printer control panel display, touch **Fax** .
2. Touch **Setup** , and then touch **Tools**.
3. Touch **Clear Fax Logs/Memory**.

Print the details of the last fax transaction

The Last Fax Transaction report prints the details of the last fax transaction to occur. Details include the fax number, number of pages, and the fax status.

To print the Last Fax Transaction report

1. From the printer control panel display, touch **Fax** .
2. Touch **Setup** , and then touch **Reports** .
3. Touch **Print Fax Reports** .
4. Touch **Last Transaction Log**.
5. Touch **Print** to begin printing.

Print a Caller ID Report

You can print a list of Caller ID fax numbers.

To print a Caller ID History Report

1. From the printer control panel display, touch **Fax** .
2. Touch **Setup** , and then touch **Reports** .
3. Touch **Print Fax Reports** .
4. Touch **Caller ID Report**.
5. Touch **Print** to begin printing.

View the Call History

You can view a list of all the calls placed from the printer.

NOTE: You cannot print the call history.

To view the call history

1. From the printer control panel display, touch **Fax** .
2. Touch **Send Now**.

3. Touch (**Phone Book**).

4. Touch (**Call History**).

Additional fax setup

After completing all the steps in the Getting Started Guide, use the instructions in this section to complete your fax setup. Keep your Getting Started Guide for later use.

In this section, you learn how to set up the printer so that faxing works successfully with equipment and services you might already have on the same phone line.

TIP: You can also use the Fax Setup Wizard (Windows) or HP Utility (OS X and macOS) to help you quickly set up some important fax settings such as the answer mode and fax header information. You can access these tools through the HP software you installed with the printer. After you run these tools, follow the procedures in this section to complete your fax setup.

This section contains the following topics:

- Set up faxing (parallel phone systems)
- Test fax setup

Set up faxing (parallel phone systems)

Before you begin setting up the printer for faxing, determine which kind of phone system your country/region uses. The instructions for fax setup differ depending on whether you have a serial- or parallel-type phone system.

- If you do not see your country/region listed in the table, you probably have a serial-type phone system. In a serial-type phone system, the connector type on your shared telephone equipment (modems, phones, and answering machines) does not allow a physical connection to the "2-EXT" port on the printer. Instead, all equipment must be connected at the telephone wall jack.

  NOTE: You might need to connect the phone cord to your country/region adapter.

- If your country/region is listed in the table, you probably have a parallel-type telephone system. In a parallel-type phone system, you are able to connect shared telephone equipment to the phone line by using the "2-EXT" port on the back of the printer.

  NOTE: If you have a parallel-type phone system, HP recommends you use the 2-wire phone cord supplied with the printer to connect it to the telephone wall jack.

Table 5-1 Countries/regions with a parallel-type phone system

Argentina	Australia	Brazil
Canada	Chile	China
Colombia	Greece	India
Indonesia	Ireland	Japan
Korea	Latin America	Malaysia
Mexico	Philippines	Poland
Portugal	Russia	Saudi Arabia
Singapore	Spain	Taiwan
Thailand	USA	Venezuela
Vietnam		

If you are unsure which kind of telephone system you have (serial or parallel), check with your telephone company.

This section contains the following topics:

- Select the correct fax setup for your home or office
- Case A: Separate fax line (no voice calls received)
- Case B: Set up the printer with DSL
- Case C: Set up the printer with a PBX phone system or an ISDN line
- Case D: Fax with a distinctive ring service on the same line
- Case E: Shared voice/fax line
- Case F: Shared voice/fax line with voice mail
- Case G: Fax line shared with computer modem (no voice calls received)
- Case H: Shared voice/fax line with computer modem
- Case I: Shared voice/fax line with answering machine
- Case J: Shared voice/fax line with computer modem and answering machine
- Case K: Shared voice/fax line with computer dial-up modem and voice mail

Select the correct fax setup for your home or office

To fax successfully, you need to know what types of equipment and services (if any) share the same phone line with the printer. This is important because you might need to connect some of your existing office equipment directly to the printer, and you might also need to change some fax settings before you can fax successfully.

1. Determine if your telephone system is serial or parallel.

   For more information, see Set up faxing (parallel phone systems).

   a. Serial-type telephone system.

   b. Parallel-type telephone system—Go to step 2.

2. Select the combination of equipment and services sharing your fax line.

   - DSL: A Digital subscriber line (DSL) service through your telephone company. (DSL might be called ADSL in your country/region.)
   - PBX: A private branch exchange (PBX) phone system.
   - ISDN: An integrated services digital network (ISDN) system.
   - Distinctive ring service: A distinctive ring service through your telephone company provides multiple telephone numbers with different ring patterns.
   - Voice calls: Voice calls are received at the same phone number you use for fax calls on the printer.
   - Computer dial-up modem: A computer dial-up modem is on the same phone line as the printer. If you answer Yes to any of the following questions, you are using a computer dial-up modem:

- Do you send and receive faxes directly to and from your computer software applications through a dial-up connection?
- Do you send and receive email messages on your computer through a dial-up connection?
- Do you access the Internet from your computer through a dial-up connection?

- Answering machine: An answering machine that answers voice calls at the same phone number you use for fax calls on the printer.
- Voice mail service: A voice mail subscription through your telephone company at the same number you use for fax calls on the printer.

3. From the following table, select the combination of equipment and services applicable to your home or office setting. Then look up the recommended fax setup. Step-by-step instructions are included for each case in the sections that follow.

NOTE: You might need to connect the phone cord to your country/region adapter.

Other equipment or services sharing your fax line							Recommended fax setup
DSL	PBX	Distinctive ring service	Voice calls	Computer dial-up modem	Answering machine	Voice mail service	
							Case A: Separate fax line (no voice calls received)
✓							Case B: Set up the printer with DSL
	✓						Case C: Set up the printer with a PBX phone system or an ISDN line
		✓					Case D: Fax with a distinctive ring service on the same line
			✓				Case E: Shared voice/fax line
			✓			✓	Case F: Shared voice/fax line with voice mail
				✓			Case G: Fax line shared with computer modem (no voice calls received)
			✓	✓			Case H: Shared voice/fax line with computer modem
			✓		✓		Case I: Shared voice/fax line with answering machine
			✓	✓	✓		Case J: Shared voice/fax line with computer modem and answering machine
			✓	✓		✓	Case K: Shared voice/fax line with computer dial-up modem and voice mail

Case A: Separate fax line (no voice calls received)

If you have a separate phone line on which you receive no voice calls, and you have no other equipment connected on this phone line, set up the printer as described in this section.

Figure 5-1 Back view of the printer

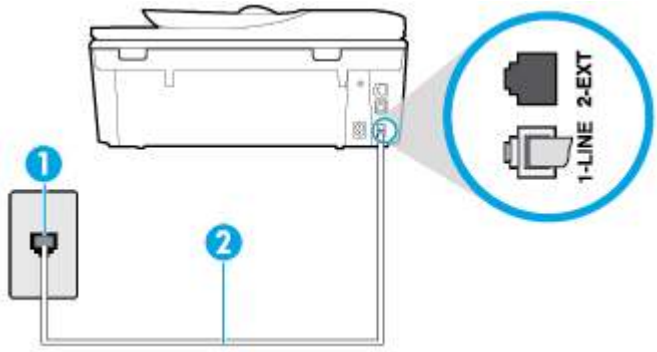

1	Telephone wall jack.
2	Use the phone cord supplied in the box with the printer to connect to the 1-LINE port. You might need to connect the phone cord to your country/region adapter.

To set up the printer with a separate fax line

1. Using the phone cord supplied in the box with the printer, connect one end to your telephone wall jack, then connect the other end to the port labeled 1-LINE on the back of the printer.

   NOTE: You might need to connect the phone cord to your country/region adapter.

2. Turn on the **Auto Answer** setting.
3. (Optional) Change the **Rings to Answer** setting to the lowest setting (two rings).
4. Run a fax test.

When the phone rings, the printer answers automatically after the number of rings you set in the **Rings to Answer** setting. The printer begins emitting fax reception tones to the sending fax machine and receives the fax.

Case B: Set up the printer with DSL

If you have a DSL service through your telephone company, and do not connect any equipment to the printer, use the instructions in this section to connect a DSL filter between the telephone wall jack and the printer. The DSL filter removes the digital signal that can interfere with the printer, so the printer can communicate correctly with the phone line. (DSL might be called ADSL in your country/region.)

NOTE: If you have a DSL line and you do not connect the DSL filter, you cannot send and receive faxes with the printer.

Figure 5-2 Back view of the printer

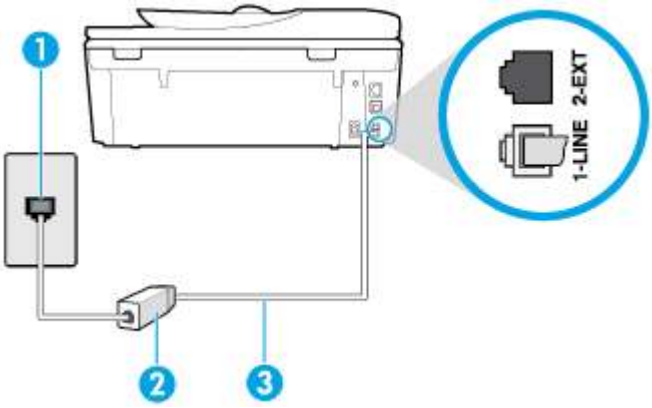

1	Telephone wall jack.
2	DSL (or ADSL) filter and cord supplied by your DSL provider.
3	Use the phone cord supplied in the box with the printer to connect to the 1-LINE port. You might need to connect the phone cord to your country/region adapter.

To set up the printer with DSL

1. Obtain a DSL filter from your DSL provider.
2. Using the phone cord supplied in the box with the printer, connect one end to the open port on the DSL filter, and then connect the other end to the port labeled 1-LINE on the back of the printer.

   NOTE: You might need to connect the phone cord to your country/region adapter.

   As only one phone cord is supplied, you might need to obtain additional phone cords for this setup.
3. Connect an additional phone cord from the DSL filter to the telephone wall jack.
4. Run a fax test.

If you encounter problems setting up the printer with optional equipment, contact your local service provider or vendor for further assistance.

Case C: Set up the printer with a PBX phone system or an ISDN line

If you are using either a PBX phone system or an ISDN converter/terminal adapter, make sure you do the following:

- If you are using either a PBX or an ISDN converter/terminal adaptor, connect the printer to the port that is designated for fax and phone use. Also, make sure that the terminal adapter is set to the correct switch type for your country/region, if possible.

NOTE: Some ISDN systems allow you to configure the ports for specific phone equipment. For example, you might have assigned one port for telephone and Group 3 fax and another port for multiple purposes. If you have problems when connected to the fax/phone port of your ISDN converter, try using the port designated for multiple purposes; it might be labeled "multi-combi" or something similar.

- If you are using a PBX phone system, set the call waiting tone to "off."

NOTE: Many digital PBX systems include a call-waiting tone that is set to "on" by default. The call waiting tone interferes with any fax transmission, and you cannot send or receive faxes with the printer. Refer to the documentation that came with your PBX phone system for instructions on how to turn off the call-waiting tone.

- If you are using a PBX phone system, dial the number for an outside line before dialing the fax number.
- You might need to connect the phone cord to your country/region adapter.

If you encounter problems setting up the printer with optional equipment, contact your local service provider or vendor for further assistance.

Case D: Fax with a distinctive ring service on the same line

If you subscribe to a distinctive ring service (through your telephone company) that allows you to have multiple phone numbers on one phone line, each with a different ring pattern, set up the printer as described in this section.

Figure 5-3 Back view of the printer

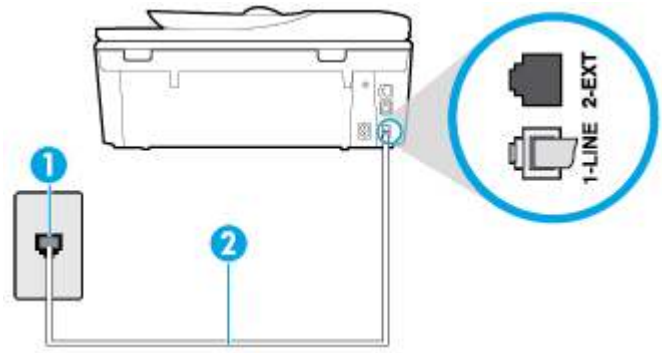

1	Telephone wall jack.
2	Use the phone cord supplied in the box with the printer to connect to the 1-LINE port. You might need to connect the phone cord to your country/region adapter.

To set up the printer with a distinctive ring service

1. Using the phone cord supplied in the box with the printer, connect one end to your telephone wall jack, then connect the other end to the port labeled 1-LINE on the back of the printer.

   NOTE: You might need to connect the phone cord to your country/region adapter.

2. Turn on the **Auto Answer** setting.
3. Change the **Distinctive Ring** setting to match the pattern that the telephone company assigned to your fax number.

NOTE: By default, the printer is set to answer all ring patterns. If you do not set the **Distinctive Ring** to match the ring pattern assigned to your fax number, the printer might answer both voice calls and fax calls or it might not answer at all.

TIP: You can also use the Ring Pattern Detection feature in the printer control panel to set distinctive ring. With this feature, the printer recognizes and records the ring pattern of an incoming call and, based on this call, automatically determines the distinctive ring pattern assigned by your telephone company to fax calls. For more information, see Change the answer ring pattern for distinctive ring.

4. (Optional) Change the **Rings to Answer** setting to the lowest setting (two rings).
5. Run a fax test.

The printer automatically answers incoming calls that have the ring pattern you selected (**Distinctive Ring** setting) after the number of rings you selected (**Rings to Answer** setting). The printer begins emitting fax reception tones to the sending fax machine and receives the fax.

If you encounter problems setting up the printer with optional equipment, contact your local service provider or vendor for further assistance.

Case E: Shared voice/fax line

If you receive both voice calls and fax calls at the same phone number, and you have no other office equipment (or voice mail) on this phone line, set up the printer as described in this section.

Figure 5-4 Back view of the printer

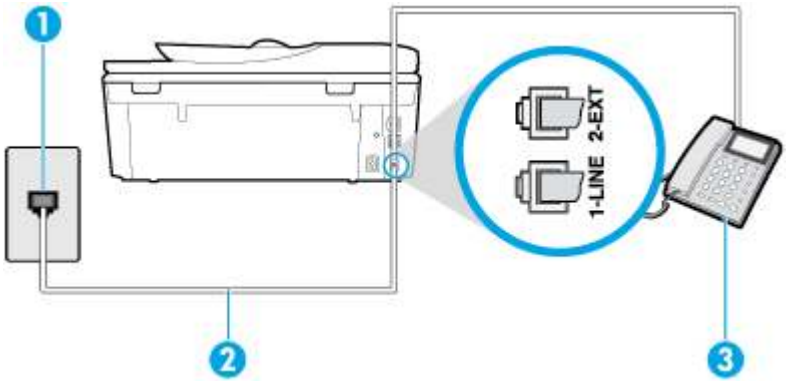

1	Telephone wall jack.
2	Use the phone cord supplied in the box with the printer to connect to the 1-LINE port. You might need to connect the phone cord to your country/region adapter.
3	Telephone (optional).

To set up the printer with a shared voice/fax line

1. Using the phone cord supplied in the box with the printer, connect one end to your telephone wall jack, then connect the other end to the port labeled 1-LINE on the back of the printer.

NOTE: You might need to connect the phone cord to your country/region adapter.

2. Do one of the following:

- If you have a parallel-type phone system, remove the white plug from the port labeled 2-EXT on the back of the printer, and then connect a phone to this port.
- If you have a serial-type phone system, you might plug your phone directly on top of the printer cable which has a wall plug attached to it.

3. Now you need to decide how you want the printer to answer calls, automatically or manually:
   - If you set up the printer to answer calls **automatically**, it answers all incoming calls and receives faxes. The printer cannot distinguish between fax and voice calls in this case; if you suspect the call is a voice call, you need to answer it before the printer answers the call. To set up the printer to answer calls automatically, turn on the **Auto Answer** setting.
   - If you set up the printer to answer faxes **manually**, you must be available to respond in person to incoming fax calls or the printer cannot receive faxes. To set up the printer to answer calls manually, turn off the **Auto Answer** setting.
4. Run a fax test.

If you pick up the phone before the printer answers the call and hear fax tones from a sending fax machine, you need to answer the fax call manually.

If you encounter problems setting up the printer with optional equipment, contact your local service provider or vendor for further assistance.

Case F: Shared voice/fax line with voice mail

If you receive both voice calls and fax calls at the same phone number, and you also subscribe to a voice mail service through your telephone company, set up the printer as described in this section.

NOTE: You cannot receive faxes automatically if you have a voice mail service at the same phone number you use for fax calls. You must receive faxes manually; this means you must be available to respond in person to incoming fax calls. If you want to receive faxes automatically instead, contact your telephone company to subscribe to a distinctive ring service, or to obtain a separate phone line for faxing.

Figure 5-5 Back view of the printer

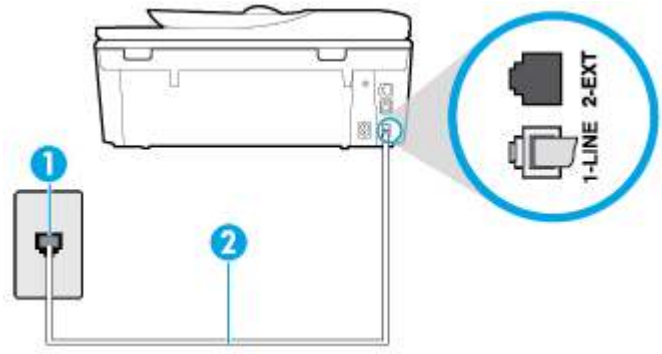

1	Telephone wall jack.
2	Use the phone cord supplied in the box with the printer to connect to the 1-LINE port. You might need to connect the phone cord to your country/region adapter.

To set up the printer with voice mail

1. Using the phone cord supplied in the box with the printer, connect one end to your telephone wall jack, then connect the other end to the port labeled 1-LINE on the back of the printer.

   You might need to connect the phone cord to your country/region adapter.

   NOTE: You might need to connect the phone cord to your country/region adapter.

2. Turn off the **Auto Answer** setting.

3. Run a fax test.

You must be available to respond in person to incoming fax calls, or the printer cannot receive faxes. You must initiate the manual fax before voicemail picks up the line.

If you encounter problems setting up the printer with optional equipment, contact your local service provider or vendor for further assistance.

Case G: Fax line shared with computer modem (no voice calls received)

If you have a fax line on which you receive no voice calls, and you also have a computer modem connected on this line, set up the printer as described in this section.

NOTE: If you have a computer dial-up modem, your computer dial-up modem shares the phone line with the printer. You cannot use both your modem and the printer simultaneously. For example, you cannot use the printer for faxing while you are using your computer dial-up modem to send an email or access the Internet.

- Set up the printer with a computer dial-up modem
- Set up the printer with a computer DSL/ADSL modem

Set up the printer with a computer dial-up modem

If you are using the same phone line for sending faxes and for a computer dial-up modem, follow these directions for setting up the printer.

Figure 5-6 Back view of the printer

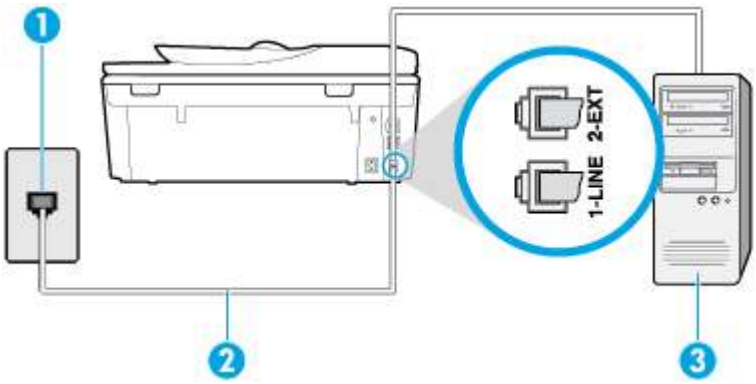

1	Telephone wall jack.
2	Use the phone cord supplied in the box with the printer to connect to the 1-LINE port. You might need to connect the phone cord to your country/region adapter
3	Computer with modem.

To set up the printer with a computer dial-up modem

1. Remove the white plug from the port labeled 2-EXT on the back of the printer.
2. Find the phone cord that connects from the back of your computer (your computer dial-up modem) to a telephone wall jack. Disconnect the cord from the telephone wall jack and plug it into the port labeled 2-EXT on the back of the printer.
3. Using the phone cord supplied in the box with the printer, connect one end to your telephone wall jack, then connect the other end to the port labeled 1-LINE on the back of the printer.

> **NOTE:** You might need to connect the phone cord to your country/region adapter.

4. If your modem software is set to receive faxes to your computer automatically, turn off that setting.

> **NOTE:** If you do not turn off the automatic fax reception setting in your modem software, the printer cannot receive faxes.

5. Turn on the **Auto Answer** setting.
6. (Optional) Change the **Rings to Answer** setting to the lowest setting (two rings).
7. Run a fax test.

When the phone rings, the printer automatically answers after the number of rings you set in the **Rings to Answer** setting. The printer begins emitting fax reception tones to the sending fax machine and receives the fax.

If you encounter problems setting up the printer with optional equipment, contact your local service provider or vendor for further assistance.

Set up the printer with a computer DSL/ADSL modem

If you have a DSL line and use that phone line to send faxes, follow these instructions to set up your fax.

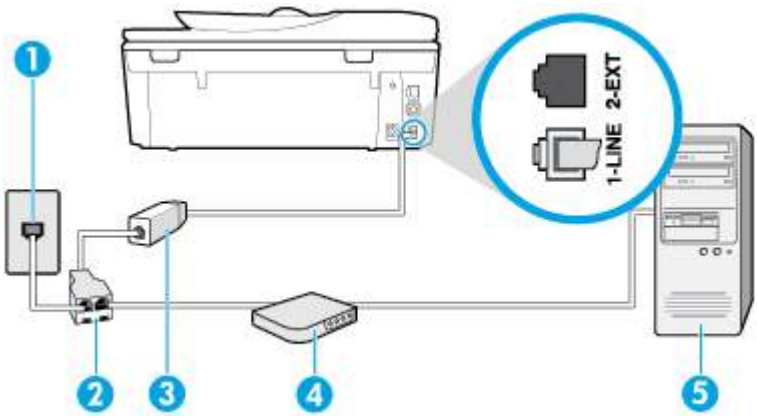

1	Telephone wall jack.
2	Parallel splitter.
3	DSL/ADSL filter. Connect one end of the phone jack that was supplied with the printer to connect to the 1-LINE port on the back of the printer. Connect the other end of the cord to the DSL/ADSL filter. You might need to connect the phone cord to your country/region adapter.

4	Computer DSL/ADSL modem.
5	Computer.

NOTE: You need to purchase a parallel splitter. A parallel splitter has one RJ-11 port on the front and two RJ-11 ports on the back. Do not use a 2–line phone splitter, a serial splitter, or a parallel splitter which has two RJ-11 ports on the front and a plug on the back.

Figure 5-7 Example of a parallel splitter



To set up the printer with a computer DSL/ADSL modem

1. Obtain a DSL filter from your DSL provider.
2. Using the phone cord provided in the box with the printer, connect one end to the DSL filter, and then connect the other end to the port labeled 1-LINE on the back of the printer.

   NOTE: You might need to connect the phone cord to your country/region adapter.
3. Connect the DSL filter to the parallel splitter.
4. Connect the DSL modem to the parallel splitter.
5. Connect the parallel splitter to the wall jack.
6. Run a fax test.

When the phone rings, the printer automatically answers after the number of rings you set in the **Rings to Answer** setting. The printer begins emitting fax reception tones to the sending fax machine and receives the fax.

If you encounter problems setting up the printer with optional equipment, contact your local service provider or vendor for further assistance.

Case H: Shared voice/fax line with computer modem

There are two different ways to set up the printer with your computer based on the number of phone ports on your computer. Before you begin, check your computer to see if it has one or two phone ports.

- Shared voice/fax with computer dial-up modem
- Shared voice/fax with computer DSL/ADSL modem

Shared voice/fax with computer dial-up modem

If you use your phone line for both fax and telephone calls, use these instructions to set up your fax.

There are two different ways to set up the printer with your computer based on the number of phone ports on your computer. Before you begin, check your computer to see if it has one or two phone ports.

NOTE: If your computer has only one phone port, you need to purchase a parallel splitter (also called a coupler), as shown in the illustration. (A parallel splitter has one RJ-11 port on the front and two RJ-11 ports on the back. Do not use a two-line phone splitter, a serial splitter, or a parallel splitter which has two RJ-11 ports on the front and a plug on the back.)

Figure 5-8 Example of a parallel splitter



Figure 5-9 Back view of the printer

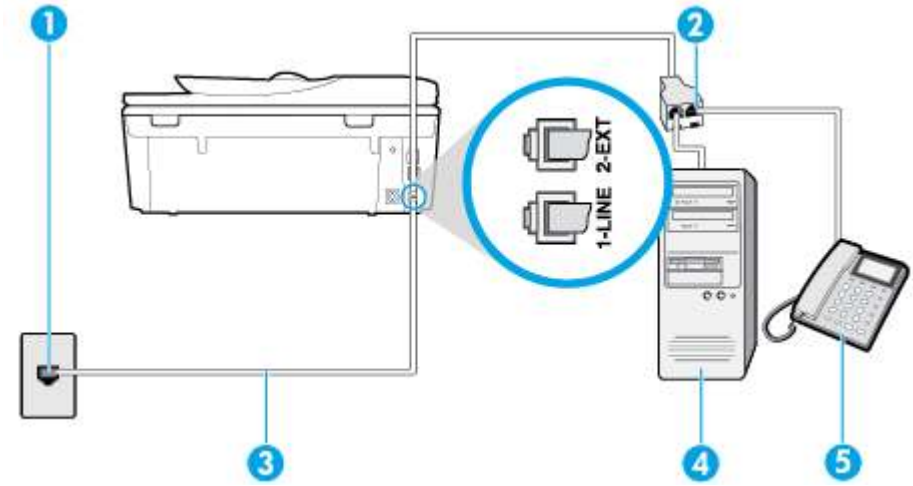

1	Telephone wall jack.
2	Use the phone cord supplied in the box with the printer to connect to the 1-LINE port.
3	Parallel splitter.
4	Computer with modem.
5	Telephone.

To set up the printer on the same phone line as a computer with two phone ports

1. Remove the white plug from the port labeled 2-EXT on the back of the printer.
2. Find the phone cord that connects from the back of your computer (your computer dial-up modem) to a telephone wall jack. Disconnect the cord from the telephone wall jack and plug it into the port labeled 2-EXT on the back of the printer.
3. Connect a phone to the "OUT" port on the back of your computer dial-up modem.
4. Using the phone cord supplied in the box with the printer, connect one end to your telephone wall jack, then connect the other end to the port labeled 1-LINE on the back of the printer.

   NOTE: You might need to connect the phone cord to your country/region adapter.

5. If your modem software is set to receive faxes to your computer automatically, turn off that setting.

   NOTE: If you do not turn off the automatic fax reception setting in your modem software, the printer cannot receive faxes.

6. Now you need to decide how you want the printer to answer calls, automatically or manually:

   - If you set up the printer to answer calls **automatically**, it answers all incoming calls and receives faxes. The printer cannot distinguish between fax and voice calls in this case; if you suspect the call is a voice call, you need to answer it before the printer answers the call. To set up the printer to answer calls automatically, turn on the **Auto Answer** setting.
   - If you set up the printer to answer faxes **manually**, you must be available to respond in person to incoming fax calls or the printer cannot receive faxes. To set up the printer to answer calls manually, turn off the **Auto Answer** setting.

7. Run a fax test.

If you pick up the phone before the printer answers the call and hear fax tones from a sending fax machine, you need to answer the fax call manually.

If you use your phone line for voice, fax, and your computer dial-up modem, follow these directions to set up your fax.

If you encounter problems setting up the printer with optional equipment, contact your local service provider or vendor for further assistance.

Shared voice/fax with computer DSL/ADSL modem

Use these instructions if your computer has a DSL/ADSL modem

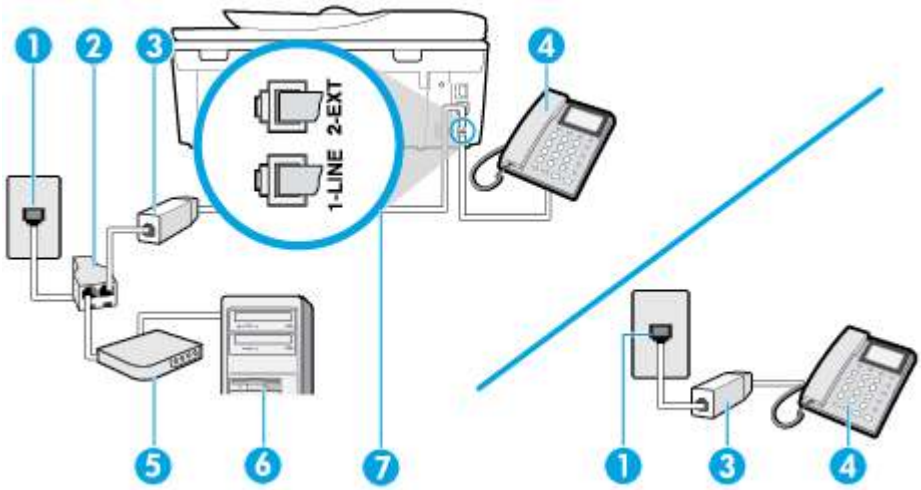

1	Telephone wall jack.
2	Parallel splitter.
3	DSL/ADSL filter.
4	Telephone.
5	DSL/ADSL modem.
6	Computer.
7	Use the phone cord provided to connect to the 1-LINE port on the back of the printer. You might need to connect the phone cord to your country/region adapter.

NOTE: You need to purchase a parallel splitter. A parallel splitter has one RJ-11 port on the front and two RJ-11 ports on the back. Do not use a 2–line phone splitter, a serial splitter, or a parallel splitter which has two RJ-11 ports on the front and a plug on the back.

Figure 5-10 Example of a parallel splitter



To set up the printer with a computer DSL/ADSL modem

1. Obtain a DSL filter from your DSL provider.

   NOTE: Phones in other parts of the home/office sharing the same phone number with DSL service need to be connected to additional DSL filters to avoid noise when making voice calls.

2. Using the phone cord supplied in the box with the printers, connect one end to the DSL filter, then connect the other end to the port labeled 1-LINE on the back of the printer.

   NOTE: You might need to connect the phone cord to your country/region adapter.

3. If you have a parallel-type phone system, remove the white plug from the port labeled 2-EXT on the back of the printer, and then connect a phone to this port.
4. Connect the DSL filter to the parallel splitter.
5. Connect the DSL modem to the parallel splitter.
6. Connect the parallel splitter to the wall jack.
7. Run a fax test.

When the phone rings, the printer automatically answers after the number of rings you set in the **Rings to Answer** setting. The printer begins emitting fax reception tones to the sending fax machine and receives the fax.

If you encounter problems setting up the printer with optional equipment, contact your local service provider or vendor for further assistance.

Case I: Shared voice/fax line with answering machine

If you receive both voice calls and fax calls at the same phone number, and you also have an answering machine that answers voice calls at this phone number, set up the printer as described in this section.

Figure 5-11 Back view of the printer

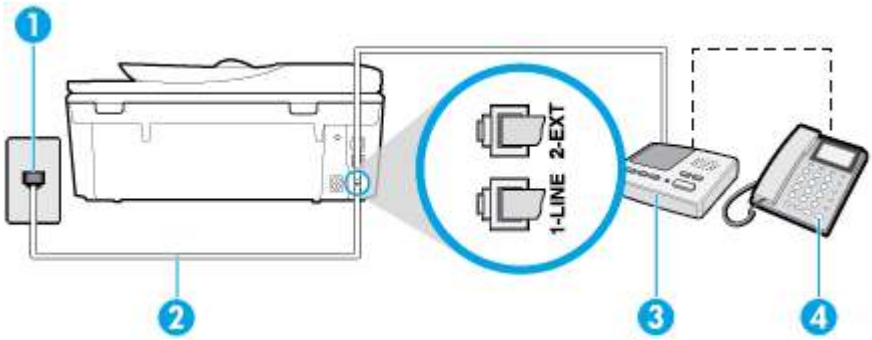

1	Telephone wall jack.

2	Use the phone cord provided to connect to the 1-LINE port on the back of the printer. You might need to connect the phone cord to your country/region adapter.
3	Answering machine.
4	Telephone (optional).

To set up the printer with a shared voice/fax line with answering machine

1. Remove the white plug from the port labeled 2-EXT on the back of the printer.
2. Unplug your answering machine from the telephone wall jack, and connect it to the port labeled 2-EXT on the back of the printer.

NOTE: If you do not connect your answering machine directly to the printer, fax tones from a sending fax machine might be recorded on your answering machine, and you might not receive faxes with the printer.

3. Using the phone cord supplied in the box with the printer, connect one end to your telephone wall jack, then connect the other end to the port labeled 1-LINE on the back of the printer.

NOTE: You might need to connect the phone cord to your country/region adapter.

4. (Optional) If your answering machine does not have a built-in phone, for convenience you might want to connect a phone to the back of your answering machine at the "OUT" port.

NOTE: If your answering machine does not let you connect an external phone, you can purchase and use a parallel splitter (also known as a coupler) to connect both the answering machine and telephone to the printer. You can use standard phone cords for these connections.

5. Turn on the **Auto Answer** setting.
6. Set your answering machine to answer after a low number of rings.
7. Change the **Rings to Answer** setting on the printer to the maximum number of rings supported by your printer. (The maximum number of rings varies by country/region.)
8. Run a fax test.

When the phone rings, your answering machine answers after the number of rings you have set, and then plays your recorded greeting. The printer monitors the call during this time, "listening" for fax tones. If incoming fax tones are detected, the printer emits fax reception tones and receives the fax; if there are no fax tones, the printer stops monitoring the line and your answering machine can record a voice message.

If you encounter problems setting up the printer with optional equipment, contact your local service provider or vendor for further assistance.

Case J: Shared voice/fax line with computer modem and answering machine

If you receive both voice calls and fax calls at the same phone number, and you also have a computer modem and answering machine connected on this phone line, set up the printer as described in this section.

NOTE: Since your computer dial-up modem shares the phone line with the printer, you cannot use both your modem and the printer simultaneously. For example, you cannot use the printer for faxing while you are using your computer dial-up modem to send an email or access the Internet.

- Shared voice/fax line with computer dial-up modem and answering machine
- Shared voice/fax line with computer DSL/ADSL modem and answering machine

Shared voice/fax line with computer dial-up modem and answering machine

There are two different ways to set up the printer with your computer based on the number of phone ports on your computer. Before you begin, check your computer to see if it has one or two phone ports.

NOTE: If your computer has only one phone port, you need to purchase a parallel splitter (also called a coupler), as shown in the illustration. (A parallel splitter has one RJ-11 port on the front and two RJ-11 ports on the back. Do not use a two-line phone splitter, a serial splitter, or a parallel splitter which has two RJ-11 ports on the front and a plug on the back.)

Figure 5-12 Example of a parallel splitter



Figure 5-13 Back view of the printer

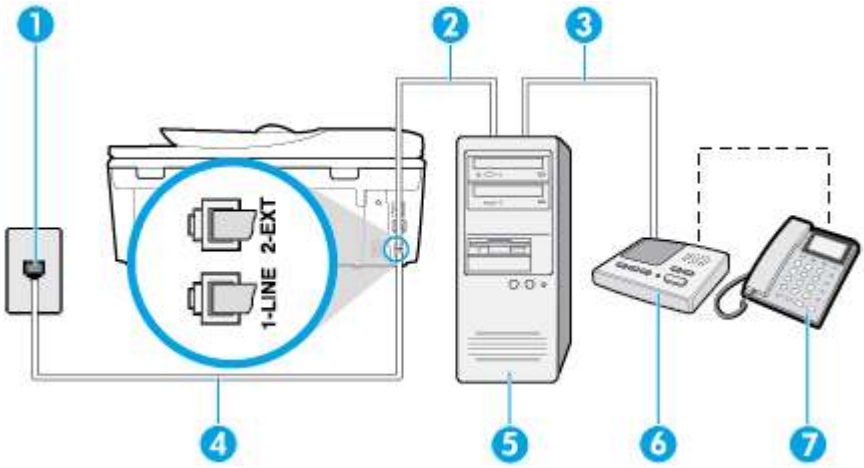

1	Telephone wall jack.
2	"IN" phone port on your computer.
3	"OUT" phone port on your computer.
4	Use the phone cord supplied in the box with the printer to connect to the 1-LINE port. You might need to connect the phone cord to your country/region adapter.
5	Computer with modem.
6	Answering machine.
7	Telephone (optional).

To set up the printer on the same phone line as a computer with two phone ports

1. Remove the white plug from the port labeled 2-EXT on the back of the printer.
2. Find the phone cord that connects from the back of your computer (your computer dial-up modem) to a telephone wall jack. Disconnect the cord from the telephone wall jack and plug it into the port labeled 2-EXT on the back of the printer.

3. Unplug your answering machine from the telephone wall jack, and connect it to the port labeled "OUT" on the back of the computer (the computer dial-up modem).

4. Using the phone cord supplied in the box with the printer, connect one end to your telephone wall jack, then connect the other end to the port labeled 1-LINE on the back of the printer.

NOTE: You might need to connect the phone cord to your country/region adapter.

5. (Optional) If your answering machine does not have a built-in phone, for convenience you might want to connect a phone to the back of your answering machine at the "OUT" port.

NOTE: If your answering machine does not let you connect an external phone, you can purchase and use a parallel splitter (also known as a coupler) to connect both the answering machine and telephone to the printer. You can use standard phone cords for these connections.

6. If your modem software is set to receive faxes to your computer automatically, turn off that setting.

NOTE: If you do not turn off the automatic fax reception setting in your modem software, the printer cannot receive faxes.

7. Turn on the **Auto Answer** setting.

8. Set your answering machine to answer after a low number of rings.

9. Change the **Rings to Answer** setting on the printer to the maximum number of rings supported by the product. (The maximum number of rings varies by country/region.)

10. Run a fax test.

When the phone rings, your answering machine answers after the number of rings you have set, and then plays your recorded greeting. The printer monitors the call during this time, "listening" for fax tones. If incoming fax tones are detected, the printer emits fax reception tones and receives the fax; if there are no fax tones, the printer stops monitoring the line and your answering machine can record a voice message.

If you encounter problems setting up the printer with optional equipment, contact your local service provider or vendor for further assistance.

Shared voice/fax line with computer DSL/ADSL modem and answering machine

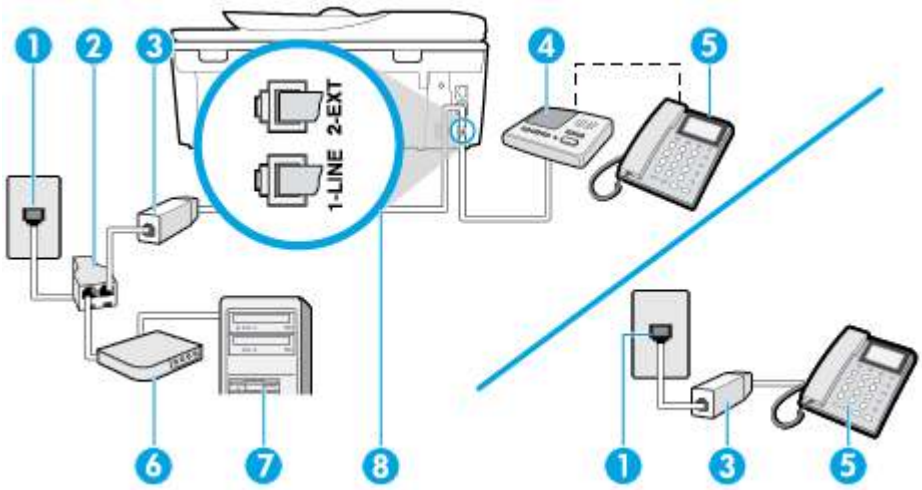

1	Telephone wall jack.

2	Parallel splitter.
3	DSL/ADSL filter.
4	Answering machine.
5	Telephone (optional).
6	DSL/ADSL modem.
7	Computer.
8	Phone cord provided with the printer connected to the 1-LINE port on the back of the printer. You might need to connect the phone cord to your country/region adapter.

NOTE: You need to purchase a parallel splitter. A parallel splitter has one RJ-11 port on the front and two RJ-11 ports on the back. Do not use a 2–line phone splitter, a serial splitter, or a parallel splitter which has two RJ-11 ports on the front and a plug on the back.

Figure 5-14 Example of a parallel splitter



To set up the printer with a computer DSL/ADSL modem

1. Obtain a DSL/ADSL filter from your DSL/ADSL provider.

   NOTE: Phones in other parts of the home/office sharing the same phone number with DSL/ADSL service need to be connected to additional DSL/ADSL filters, to avoid noise when making voice calls.

2. Using the phone cord supplied in the box with the printer, connect one end to the DSL/ADSL filter, then connect the other end to the port labeled 1-LINE on the back of the printer.

   NOTE: You might need to connect the phone cord to your country/region adapter.

3. Connect the DSL/ADSL filter to the splitter.
4. Unplug the answering machine from the telephone wall jack, and connect it to the port labeled 2-EXT on the back of the printer.

   NOTE: If you do not connect your answering machine directly to the printer, fax tones from a sending fax machine might be recorded on your answering machine, and you might not receive faxes with the printer.

5. Connect the DSL modem to the parallel splitter.
6. Connect the parallel splitter to the wall jack.
7. Set your answering machine to answer after a low number of rings.
8. Change your **Rings to Answer** setting on the printer to the maximum number of rings supported by the printer.

   NOTE: The maximum number of rings varies by country/region.

9. Run a fax test.

When the phone rings, your answering machine answers after the number of rings you have set, and then play your recorded greeting. The printer monitors the call during this time, “listening” for fax tones. If incoming fax tones are detected, the printer emits fax reception tones and receive the fax; if there are no fax tones, the printer stops monitoring the line and your answering machine can record a voice message.

If you use the same phone line for telephone, fax, and have a computer DSL modem, follow these instructions to set up your fax.

If you encounter problems setting up the printer with optional equipment, contact your local service provider or vendor for further assistance.

Case K: Shared voice/fax line with computer dial-up modem and voice mail

If you receive both voice calls and fax calls at the same phone number, use a computer dial-up modem on the same phone line, and subscribe to a voice mail service through your telephone company, set up the printer as described in this section.

NOTE: You cannot receive faxes automatically if you have a voice mail service at the same phone number you use for fax calls. You must receive faxes manually; this means you must be available to respond in person to incoming fax calls. If you want to receive faxes automatically instead, contact your telephone company to subscribe to a distinctive ring service, or to obtain a separate phone line for faxing.

Since your computer dial-up modem shares the phone line with the printer, you cannot use both your modem and the printer simultaneously. For example, you cannot use the printer for faxing if you are using your computer dial-up modem to send an email or access the Internet.

There are two different ways to set up the printer with your computer based on the number of phone ports on your computer. Before you begin, check your computer to see if it has one or two phone ports.

- If your computer has only one phone port, you need to purchase a parallel splitter (also called a coupler), as shown in the illustration. (A parallel splitter has one RJ-11 port on the front and two RJ-11 ports on the back. Do not use a two-line phone splitter, a serial splitter, or a parallel splitter which has two RJ-11 ports on the front and a plug on the back.)

  Figure 5-15 Example of a parallel splitter

  

- If your computer has two phone ports, set up the printer as follows:

  Figure 5-16 Back view of the printer

  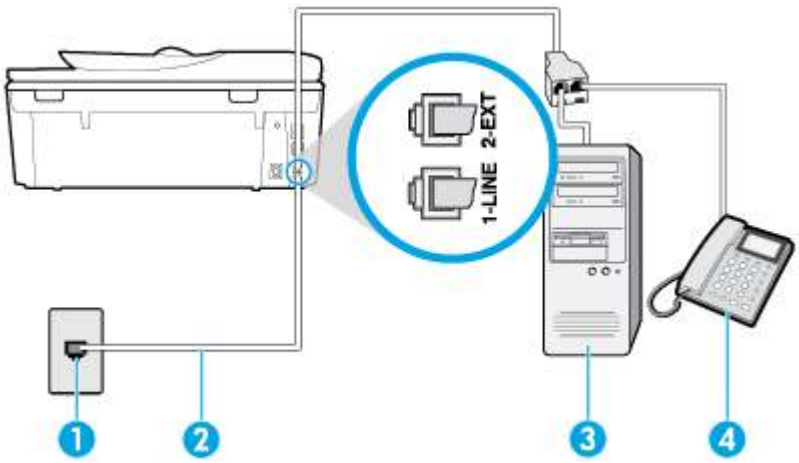

1	Telephone wall jack.
2	Use the phone cord supplied in the box with the printer to connect to the 1-LINE port. You might need to connect the phone cord to your country/region adapter.
3	Computer with modem.
4	Telephone.

To set up the printer on the same phone line as a computer with two phone ports

1. Remove the white plug from the port labeled 2-EXT on the back of the printer.
2. Find the phone cord that connects from the back of your computer (your computer dial-up modem) to a telephone wall jack. Disconnect the cord from the telephone wall jack and plug it into the port labeled 2-EXT on the back of the printer.
3. Connect a phone to the "OUT" port on the back of your computer dial-up modem.
4. Using the phone cord supplied in the box with the printer, connect one end to your telephone wall jack, then connect the other end to the port labeled 1-LINE on the back of the printer.

   NOTE: You might need to connect the phone cord to your country/region adapter.

5. If your modem software is set to receive faxes to your computer automatically, turn off that setting.

   NOTE: If you do not turn off the automatic fax reception setting in your modem software, the printer cannot receive faxes.

6. Turn off the **Auto Answer** setting.
7. Run a fax test.

You must be available to respond in person to incoming fax calls, or the printer cannot receive faxes.

If you encounter problems setting up the printer with optional equipment, contact your local service provider or vendor for further assistance.

Test fax setup

You can test your fax setup to check the status of the printer and to make sure it is set up correctly for faxing. Perform this test after you have completed setting up the printer for faxing. The test does the following:

- Tests the fax hardware
- Verifies the correct type of phone cord is connected to the printer
- Checks that the phone cord is plugged into the correct port
- Checks for a dial tone
- Checks for an active phone line
- Tests the status of your phone line connection

The printer prints a report with the results of the test. If the test fails, review the report for information on how to fix the problem and rerun the test.

To test fax setup via the printer control panel

1. Set up the printer for faxing according to your particular home or office setup instructions.
2. Make sure the cartridges are installed, and that full-size paper is loaded in the input tray before starting the test.
3. From the top of the screen, touch or swipe down the tab to open the Dashboard, and then touch (**Setup**).
4. Touch **Fax Setup** .
5. Touch **Tools** , and then touch **Run Fax Test**.

   The printer displays the status of the test on the display and prints a report.
6. Review the report.
   - If the test passes and you are still having problems faxing, check the fax settings listed in the report to verify the settings are correct. A blank or incorrect fax setting can cause problems faxing.
   - If the test fails, review the report for more information on how to fix any problems found.

6 Web Services

- What are Web Services?
- Set up Web Services
- Use Web Services
- Remove Web Services

What are Web Services?

The printer offers innovative, web-enabled solutions that can help you quickly access the Internet, obtain documents, and print them faster and with less hassle—and all without using a computer.

NOTE: To use these web features, the printer must be connected to the Internet (either using an Ethernet cable or wireless connection). You cannot use these web features if the printer is connected using a USB cable.

HP ePrint

- HP ePrint is a free service from HP that allows you to print to your HP ePrint-enabled printer anytime, from any location. It's as simple as sending an email to the email address assigned to your printer when you enable Web Services on the printer. No special drivers or software are needed. If you can send an email, you can print from anywhere, using HP ePrint.

  NOTE: You can sign up for an account on HP Connected (might not be available in all countries/regions), and sign in to configure the ePrint settings.

  Once you have signed up for an account on HP Connected (might not be available in all countries/regions), you can sign in to view your HP ePrint job status, manage your HP ePrint printer queue, control who can use your printer's HP ePrint email address to print, and get help for HP ePrint.

Printer apps

- With printer apps, you can scan and store your documents digitally on the Web, and also access and share the content, and do more.
- For preview, add and remove printer apps, visit HP Connected . This site might not be available in all countries/regions.

Set up Web Services

Before you set up Web Services, make sure your printer is connected to the Internet.

To set up Web Services, use one of the following methods.

To set up Web Services using the printer control panel

1. From the top of the screen, touch or swipe down the tab to open the Dashboard, and then touch (**Setup**).
2. Touch **Web Services Setup** .
3. Touch **Yes** to accept the Web Services terms of setup.
4. The printer will automatically check updates and set up Web Services.
5. Touch **OK** when you see Web Services have been set up successfully.
6. When the printer is connected to the server, the printer prints an information page, and shows Web Services Summary on the screen.

To set up Web Services using the embedded web server

1. Open the EWS. For more information, see Embedded web server.
2. In the **Web Services Settings** section, click **Setup** , click **Continue**, and follow the onscreen instructions to accept the terms of use.
3. If prompted, choose to allow the printer to check for and install printer updates.

NOTE: When updates are available, they are automatically downloaded and installed, and then the printer restarts.

NOTE: If prompted for proxy settings and if your network uses proxy settings, follow the onscreen instructions to set up a proxy server. If you do not have the proxy details, contact your network administrator or the person who set up the network.

4. When the printer is connected to the server, the printer prints an information page. Follow the instructions on the information page to finish the setup.

To set up Web Services using the HP printer software (Windows)

1. Open the HP printer software. For more information, see Open the HP printer software (Windows).
2. In the window that appears, double-click **Print, Scan & Fax** and then select **Connect Printer to the Web** under **Print**. The printer's home page (embedded web server) opens.
3. In the **Web Services Settings** section, click **Setup** , click **Continue**, and follow the onscreen instructions to accept the terms of use.
4. If prompted, choose to allow the printer to check for and install printer updates.

NOTE: When updates are available, they are automatically downloaded and installed, and then the printer restarts.

NOTE: If prompted for proxy settings and if your network uses proxy settings, follow the onscreen instructions to set up a proxy server. If you do not have the details, contact your network administrator or the person who set up the network.

5. When the printer is connected to the server, the printer prints an information page. Follow the instructions on the information page to finish the setup.

Use Web Services

The following section describes how to use and configure Web Services.

- HP ePrint
- Printer apps

HP ePrint

To use HP ePrint, do the following:

- Be sure you have an Internet- and email-capable computer or mobile device.
- Enable Web Services on the printer. For more information, see Set up Web Services.

TIP: For more information about managing and configuring HP ePrint settings and to learn about the latest features, visit HP Connected This site might not be available in all countries/regions..

To print documents using HP ePrint

1. On your computer or mobile device, open your email application.
2. Create a new email message, and then attach the file that you want to print.
3. Enter the HP ePrint email address in the “To” field, and then select the option to send the email message.

NOTE: Do not enter any additional email addresses in either the "To" or "Cc" fields. The HP ePrint server does not accept print jobs if there are multiple email addresses.

To find the HP ePrint email address

▲ From the printer control panel, touch or swipe down the tab at the top of the screen to open the Dashboard and then do one of the following.

a. Touch (**Setup**), then touch **Web Services Setup**, and then touch **Display Email Address**.

b. Touch (**Setup**), then touch **Web Services Setup**, and then touch **Print Info.**. The printer prints an information page that contains the printer code and instructions on how to customize the email address.

To turn off HP ePrint

1. From the printer control panel, touch or swipe down the tab at the top of the screen to open the Dashboard, touch (**HP ePrint**), and then touch (**Web Services Settings**).
2. Touch **HP ePrint** , and then touch **Off** .

NOTE: To remove all Web Services, see Remove Web Services.

Printer apps

Printer apps allow you to store, access, and share your content in the cloud, and more.

To use printer apps

1. From the Home screen, then touch **Apps** .
2. Touch the printer app you want to use.

For more information about individual print app, visit HP Connected . This site might not be available in all countries/regions.

To manage printer apps

- You can preview, add or remove printer apps from your printer with HP Connected . This site might not be available in all countries/regions.

Remove Web Services

Use the following instructions to remove Web Services.

To remove Web Services using the printer control panel

1. From the top of the screen, touch or swipe down the tab to open the Dashboard, touch (**HP ePrint**), and then touch (**Web Services Settings**).
2. Touch **Remove Web Services**.

To remove Web Services using the embedded web server

1. Open the EWS. For more information, see Embedded web server.
2. Click the **Web Services** tab, and then click **Remove Web Services** in the **Web Services Settings** section.
3. Click **Remove Web Services**.
4. Click **Yes** to remove Web Services from your printer.

7 Work with cartridges

To ensure the best print quality from the printer, you need to perform some simple maintenance procedures.

This section contains the following topics:

- Information on cartridges and the printhead
- Check the estimated ink levels
- Replace the cartridges
- Order cartridges
- Use single-cartridge mode
- Store printing supplies
- Cartridge warranty information

Information on cartridges and the printhead

The following tips help maintain HP cartridges and ensure consistent print quality.

- The instructions in this guide are for replacing cartridges, and are not intended for first time installation.
- Keep all cartridges in the original sealed packages until they are needed.
- Be sure to turn off the printer properly. For more information, see Turn the printer off .
- Store cartridges at room temperature (15-35° C or 59-95° F).
- Do not clean the printhead unnecessarily. This wastes ink and shortens the life of the cartridges.
- Handle cartridges carefully. Dropping, jarring, or rough handling during installation can cause temporary printing problems.
- If you are transporting the printer, do the following to prevent ink leaking from the printer or other damage from occurring to the printer:
  - Make sure you turn off the printer by pressing (the Power button). Wait until all sounds of internal motion stop before unplugging the printer.
  - Make sure you leave the cartridges installed.
  - The printer must be transported sitting flat; it should not be placed on its side, back, front, or top.

Related topics

- Check the estimated ink levels

Check the estimated ink levels

You can check the estimated ink levels from the printer software or from the printer control panel.

To check the estimated ink levels from the printer control panel

- From the printer control panel, touch or swipe down the tab at the top of the screen to open the Dashboard, and then touch (**Ink**) to check the estimated ink levels.

To check the ink levels from the printer software (Windows)

1. Open the HP printer software.
2. In the printer software, click **Estimated Levels** at the top of the window.

NOTE: Ink level alerts and indicators provide estimates for planning purposes only. When you receive a low-ink alert, consider having a replacement cartridge available to avoid possible printing delays. You do not have to replace the cartridges until prompted to do so.

NOTE: If you have installed a refilled or remanufactured cartridge, or a cartridge that has been used in another printer, the ink level indicator might be inaccurate or unavailable.

NOTE: Ink from the cartridges is used in the printing process in a number of different ways, including in the initialization process, which prepares the printer and cartridges for printing, and in printhead servicing, which keeps print nozzles clear and ink flowing smoothly. In addition, some residual ink is left in the cartridge after it is used. For more information, see www.hp.com/go/inkusage .

Replace the cartridges

If you do not already have replacement cartridges for the printer, see Order cartridges .

NOTE: At this time, some portions of the HP website are available in English only.

NOTE: Not all cartridges are available in all countries/regions.

NOTE: For information on recycling used ink supplies, see HP inkjet supplies recycling program.

To replace the cartridges

1. Check that power is on.
2. Remove the old cartridge.
   a. Open the access door.

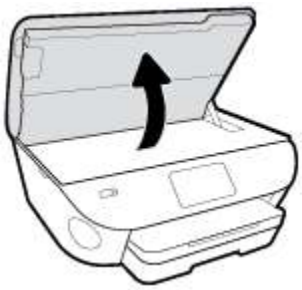

   b. Remove the cartridge from the slot.
3. Insert a new cartridge.
   a. Remove the cartridge from packaging.

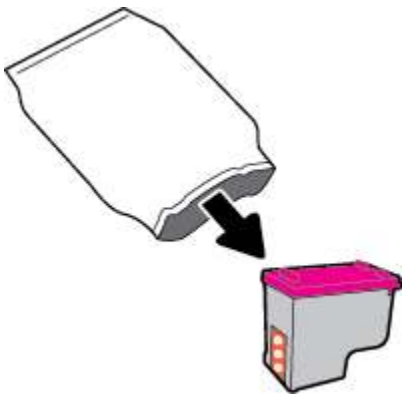

   b. Remove plastic tape using the pull tab.



c. Slide the new cartridge in the slot until it clicks.

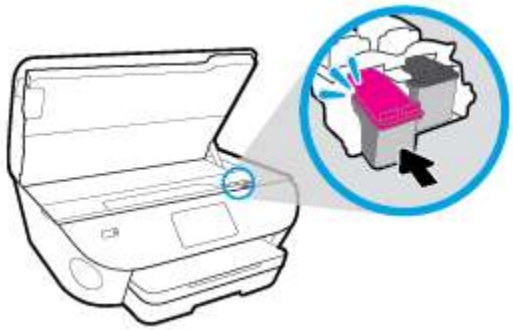

4. Close the cartridge access door.

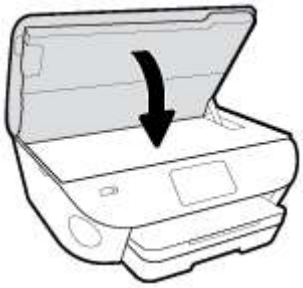

NOTE: The HP printer software prompts you to align the cartridges when you print a document after installing a new cartridge.

Order cartridges

To order cartridges, go to www.hp.com . (At this time, some portions of the HP website are available in English only.) Ordering cartridges online is not supported in all countries/regions. However, many countries have information on ordering by telephone, locating a local store and printing a shopping list. In addition, you can visit the www.hp.com/buy/supplies page to obtain information about purchasing HP products in your country.

Use only the replacement cartridges that have the same cartridge number as the cartridge you are replacing. You can find the cartridge number in the following places:

- In the embedded web server, by clicking the **Tools** tab, and then, under **Product Information** clicking **Supply Status**. For more information, see Embedded web server.
- On the label of the cartridge you are replacing.
- On a sticker inside the printer. Open the cartridge access door to locate the sticker.

NOTE: The **Setup** cartridge that comes with the printer is not available for separate purchase.

Use single-cartridge mode

Use the single-cartridge mode to operate the HP ENVY Photo 7800 series with only one cartridge. The single-cartridge mode is initiated when an cartridge is removed from the cartridge carriage. During single-cartridge mode, the printer can copy documents, copy photos, and print jobs from the computer.

NOTE: When the HP ENVY Photo 7800 series operates in single-cartridge mode, a message is displayed on the printer display. If the message is displayed and two cartridges are installed in the printer, verify that the protective piece of plastic tape has been removed from each cartridge. When plastic tape covers the cartridge contacts, the printer cannot detect that the cartridge is installed.

Exit single-cartridge mode

- Install two cartridges in the HP ENVY Photo 7800 series to exit single-cartridge mode.

Store printing supplies

Cartridges can be left in the printer for extended periods of time. However, to assure optimal cartridge health, be sure to turn off the printer properly when the printer is not in use. For more information, see Turn the printer off .

Cartridge warranty information

The HP cartridge warranty is applicable when the cartridge is used in its designated HP printing device. This warranty does not cover HP cartridges that have been refilled, remanufactured, refurbished, misused, or tampered with.

During the warranty period the cartridge is covered as long as the HP ink is not depleted and the end of warranty date has not been reached. The end of warranty date, in YYYY/MM format, may be found on the cartridge as indicated:

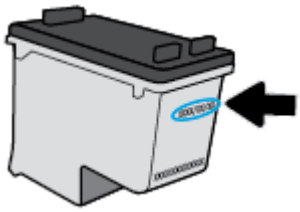

For a copy of the HP Limited Warranty Statement for the printer, see the printed documentation that came with the product.

8 Network setup

Additional advanced settings are available from the printer's home page (embedded web server or EWS). For more information, see Embedded web server.

This section contains the following topics:

- Set up the printer for wireless communication
- Change network settings
- Use Wi-Fi Direct

Set up the printer for wireless communication

- Before you begin
- Set up the printer on your wireless network
- Change the connection type
- Test the wireless connection
- Turn on or off the wireless capability of the printer

NOTE: If you encounter problems connecting the printer, see Network and connection issues.

TIP: For more information about setting up and using the printer wirelessly, visit the HP Wireless Printing Center (www.hp.com/go/wirelessprinting).

Before you begin

Ensure the following:

- The printer is not connected to the network using an Ethernet cable.
- The wireless network is set up and working properly.
- The printer and the computers that use the printer are on the same network (subnet).

While connecting the printer, you might be prompted to enter the wireless network name (SSID) and a wireless password.

- The wireless network name is the name of your wireless network.
- The wireless password prevents other people from connecting to your wireless network without your permission. Depending on the level of security required, your wireless network might use either a WPA passphrase or WEP key.

If you have not changed the network name or the security passkey since setting up your wireless network, you can sometimes find them on the back or side of the wireless router.

If you cannot find the network name or the security password or cannot remember this information, see the documentation provided with your computer or with the wireless router. If you still cannot find this information, contact your network administrator or the person who set up the wireless network.

Set up the printer on your wireless network

To set up from the printer control panel

Use the Wireless Setup Wizard from the printer control panel display to set up wireless communication.

NOTE: Before you proceed, go through the list at Before you begin.

1. From the printer control panel, touch or swipe down the tab at the top of the screen to open the Dashboard, and then touch (Wireless).
2. Touch (**Settings**).
3. Touch **Wireless Settings**.

4. Touch **Wireless Setup Wizard** or **Wi-Fi Protected Setup**.
5. Follow the display instructions to complete the setup.

If you are already using the printer with a different type of connection, such as a USB connection, follow the instructions in Change the connection type to set up the printer on your wireless network.

To set up using the HP Smart app

You can use the HP Smart to set up the printer on your wireless network. The HP Smart app is supported on iOS, Android, and Windows devices. For information about this app, see Use the HP Smart app to print, scan, and troubleshoot from an iOS, Android, or Windows 10 device.

1. If you are using an iOS or Android mobile device, make sure that Bluetooth is turned on. (HP Smart uses Bluetooth to make the setup process faster and easier on iOS and Andoid mobile devices.)

NOTE: HP Smart uses Bluetooth for printer setup only. Printing using Bluetooth is not supported.

2. Open the HP Smart app.
3. **Windows**: Click or tap **Setup a new printer** and follow the onscreen instructions to add a printer to your network.

   iOS/Android: Tap the Plus icon on the home screen and then tap **Add Printer**. Follow the onscreen instructions to add a printer to your network.

Change the connection type

After you have installed the HP printer software and connected the printer to your computer or to a network, you can use the software to change the connection type (for example, from a USB connection to a wireless connection).

NOTE: Connecting an Ethernet cable turns off the wireless capability of the printer.

To change from an Ethernet connection to a wireless connection (Windows)

1. Remove the Ethernet cable from the printer.
2. Run the Wireless Setup Wizard to make the wireless connection. For more information, see Set up the printer on your wireless network.

To change from a USB connection to a wireless network (Windows)

Before you proceed, go through the list at Before you begin.

1. Open the HP printer software. For more information, see Open the HP printer software (Windows).
2. Click **Tools**.
3. Click **Device Setup & Software**.
4. Select **Convert a USB connected device to wireless**. Follow the onscreen instructions.

To change from a USB connection to a wireless network using the HP Smart app on a Windows 10 computer (Windows)

1. Before you proceed, make sure your computer and printer meet the following requirements:

- Your printer is currently connected to your computer through USB.
- Your computer is currently connected to a wireless network.

2. Open the HP Smart app. For information about how to open the app on a Windows 10 computer, see Use the HP Smart app to print, scan, and troubleshoot from an iOS, Android, or Windows 10 device.
3. Make sure your printer is selected.

TIP: If you want to select a different printer, click the Printer icon on the toolbar at the left side of the screen, and then select **Select a Different Printer** to view all available printers.

4. Click **Learn More** when you see "Make printing easier by connecting your printer wirelessly" on top of the home page of the app.

To change from a USB or Ethernet connection to a wireless connection (OS X and macOS)

1. Remove any USB or Ethernet cable from the printer.
2. Restore the printer to its network defaults. For more information, see Restore original factory defaults and settings.
3. Download the most recent version of HP Easy Start from 123.hp.com.
4. Open HP Easy Start and follow the onscreen instructions to connect your printer.

Learn more about how to change from a USB to wireless connection. Click here to go online for more information. At this time, this website might not be available in all languages.

To change from a wireless connection to a USB or Ethernet connection (Windows)

- Connect the USB or Ethernet cable to the printer.

To change from a wireless connection to a USB or Ethernet connection (OS X and macOS)

1. Open **System Preferences** .
2. Click **Printers & Scanners** .
3. Select your printer in the left pane and click - at the bottom of the list. Do the same for the fax entry, if there is one for the current connection.
4. Connect the printer to your computer or network using either a USB or Ethernet cable.
5. Click + below the list of printers at the left.
6. Select the new printer from the list.
7. Choose your printer model name from the **Use** pop-up menu.
8. Click **Add**.

Test the wireless connection

Print the wireless test report for information about the printer wireless connection. The wireless test report provides information about the printer status, hardware (MAC) address, and IP address. If there is a problem with the wireless connection or if a wireless connection attempt failed, the wireless test report also provides

diagnostic information. If the printer is connected to a network, the test report displays details about the network settings.

To print the wireless test report

1. From the printer control panel, touch or swipe down the tab at the top of the screen to open the Dashboard, touch (the Wireless button), and then touch (**Settings**).
2. Touch **Print Reports**.
3. Touch **Wireless Test Report**.

Turn on or off the wireless capability of the printer

The blue Wireless light on the printer control panel is lit when the wireless capability of the printer is on.

NOTE: Connecting an Ethernet cable to the printer automatically turns off the wireless capability and the Wireless light.

1. From the printer control panel, touch or swipe down the tab at the top of the screen to open the Dashboard, touch (the Wireless button), and then touch (**Settings**).
2. Touch **Wireless Settings**.
3. Turn on or off **Wireless**.

Change network settings

From the printer control panel, you can set up and manage your printer's wireless connection and perform a variety of network management tasks. This includes viewing and changing network settings, restoring network defaults, and turning the wireless function on or off.

CAUTION: Network settings are provided for your convenience. However, unless you are an advanced user, you should not change some of these settings (such as the link speed, IP settings, default gateway, and firewall settings).

To print network settings

Do one of the following:

- From the printer control panel, touch or swipe down the tab at the top of the screen to open the Dashboard. Touch (Wireless) or (Ethernet) to display the network status screen. Touch **Print Details** to print the network configuration page.
- From the printer control panel, touch or swipe down the tab at the top of the screen to open the Dashboard, touch (**Setup**), touch **Reports** , and then touch **Network Configuration Page**.

To set the link speed

You can change the speed at which data is transmitted over the network. The default is **Automatic**.

1. From the printer control panel, touch or swipe down the tab at the top of the screen to open the Dashboard, touch (**Setup**), and then touch **Network Setup**.
2. Touch **Ethernet Settings**.
3. Select **Advanced Settings**.
4. Touch **Link Speed**.
5. Touch the appropriate option that matches your network hardware.

To change IP settings

The default IP setting for the IP settings is **Automatic**, which sets the IP settings automatically. If you are an advanced user and want to use different settings (such as the IP address, subnet mask, or the default gateway), you can change them manually.

TIP: Before setting a manual IP address, it is recommended to first connect the printer to the network using Automatic mode. This allows the router to configure the printer with other needed settings like subnet mask, default gateway and DNS address.

CAUTION: Be careful when manually assigning an IP address. If you enter an invalid IP address during the installation, your network components cannot connect with the printer.

1. From the printer control panel, touch or swipe down the tab at the top of the screen to open the Dashboard, touch (**Setup**), and then touch **Network Setup**.
2. Touch **Ethernet Settings** or **Wireless Settings**.
3. Touch **Advanced Settings**.

4. Touch **IP Settings**.

   A message appears warning that changing the IP address removes the printer from the network. Touch **OK** to continue.

5. To change the settings manually, touch **Manual (Static)**, and then enter the appropriate information for the following settings:

   - **IP Address**
   - **Subnet Mask**
   - **Default Gateway**
   - **DNS Address**

6. Enter your changes, and then touch **Apply**.

Use Wi-Fi Direct

With Wi-Fi Direct, you can print wirelessly from a computer, smart phone, tablet, or other wireless-capable device—without connecting to an existing wireless network.

Guidelines for using Wi-Fi Direct

- Make sure your computer or mobile device has the necessary software.
  - If you are using a computer, make sure you have installed the printer software provided with the printer.

    If you have not installed the HP printer software on the computer, connect to Wi-Fi Direct first and then install the printer software. Select **Wireless** when prompted by the printer software for a connection type.
  - If you are using a mobile device, make sure you have installed a compatible printing app. For more information about mobile printing, visit www.hp.com/global/us/en/eprint/mobile_printing_apps.html.
- Make sure Wi-Fi Direct for your printer is turned on.
- Up to five computers and mobile devices can use the same Wi-Fi Direct connection.
- Wi-Fi Direct can be used while the printer is also connected either to a computer using a USB cable or to a network using a wireless connection.
- Wi-Fi Direct cannot be used to connect a computer, mobile device, or printer to the Internet.

To turn on Wi-Fi Direct

1. From the printer control panel, touch or swipe down the tab at the top of the screen to open the Dashboard, and then touch (Wi-Fi Direct).
2. Touch (**Settings**).
3. If the display shows that Wi-Fi Direct is **Off** , turn on **Wi-Fi Direct**.

TIP: You can also turn on Wi-Fi Direct from the EWS. For more information about using the EWS, see Embedded web server.

To change connection method

1. From the printer control panel, touch or swipe down the tab at the top of the screen to open the Dashboard, and then touch (Wi-Fi Direct).
2. Touch (**Settings**).
3. Touch **Connection Method** and then select **Automatic** or **Manual** .

To print from a wireless-capable mobile device that supports Wi-Fi Direct

Make sure you have installed the latest version of HP Print Service Plugin on your mobile device. You can download this plugin from the Google Play application store.

1. Make sure you have turned on Wi-Fi Direct on the printer.
2. Turn on Wi-Fi Direct on your mobile device. For more information, see the documentation provided with the mobile device.
3. From your mobile device, select a document from a print enabled application, and then select the option to print the document.

   The list of available printers appears.
4. From the list of available printers, choose the Wi-Fi Direct name shown such as DIRECT-**- HP ENVY Photo-7800 (where ** are the unique characters to identify your printer) to connect your mobile device.

   If the mobile device is not automatically connected to the printer, follow the instructions on the printer control panel to connect to the printer. If a PIN code is displayed on the printer control panel, enter the PIN code on your mobile device.

   When the mobile device is successfully connected to the printer, the printer starts printing.

To print from a wireless-capable mobile device that does not support Wi-Fi Direct

Make sure you have installed a compatible printing app on your mobile device. For more information, visit the HP Mobile Printing website at www.hp.com/go/mobileprinting . If a local version of this website is not available in your country/region or language, you might be directed to the HP Mobile Printing site in another country/region or language.

1. Make sure you have turned on Wi-Fi Direct on the printer.
2. Turn on the Wi-Fi connection on your mobile device. For more information, see the documentation provided with the mobile device.

   NOTE: If your mobile device does not support Wi-Fi, you are not able to use Wi-Fi Direct.
3. From the mobile device, connect to a new network. Use the process you normally use to connect to a new wireless network or hotspot. Choose the Wi-Fi Direct name from the list of wireless networks shown such as DIRECT-**- HP ENVY Photo-7800 (where ** are the unique characters to identify your printer).

   Enter the Wi-Fi Direct password when prompted.
4. Print your document.

To print from a wireless-capable computer (Windows)

1. Make sure you have turned on Wi-Fi Direct on the printer.
2. Turn on the computer's Wi-Fi connection. For more information, see the documentation provided with the computer.

   NOTE: If your computer does not support Wi-Fi, you are not able to use Wi-Fi Direct.

3. From the computer, connect to a new network. Use the process you normally use to connect to a new wireless network or hotspot. Choose the Wi-Fi Direct name from the list of wireless networks shown such as DIRECT-**- HP ENVY Photo-7800 (where ** are the unique characters to identify your printer).

   Enter the Wi-Fi Direct password when prompted.

4. Proceed to step 5 if the printer has been installed and connected to the computer over a wireless network. If the printer has been installed and connected to your computer with a USB cable, follow the steps below to install the printer software using the Wi-Fi Direct connection.

   a. Open the HP printer software. For more information, see Open the HP printer software (Windows).

   b. Click **Tools**.

   c. Click **Device Setup & Software**, and then select **Connect a new device**.

   NOTE: If you have previously installed the printer over USB and want to convert to Wi-Fi Direct, do not select the **Convert a USB connected device to wireless** option.

   d. When the **Connection Options** software screen appears, select **Wireless**.

   e. Select your HP printer from the detected printer list.

   f. Follow the onscreen instructions.

5. Print your document.

To print from a wireless-capable computer (OS X and macOS)

1. Make sure you have turned on Wi-Fi Direct on the printer.

2. Turn on Wi-Fi on the computer.

   For more information, see the documentation provided by Apple.

3. Click the Wi-Fi icon and choose the Wi-Fi Direct name, such as DIRECT-**- HP ENVY Photo-7800 (where ** are the unique characters to identify your printer).

   If Wi-Fi Direct is turned on with security, enter the password when prompted.

4. Add the printer.

   a. Open **System Preferences** .

   b. Depending on your operating system, click **Printers & Scanners** .

   c. Click + below the list of printers at the left.

   d. Select the printer from the list of detected printers (the word “Bonjour” is listed the right column beside the printer name), and click **Add**.

Click here for online troubleshooting for Wi-Fi Direct, or for more help with setting up Wi-Fi Direct. At this time, this website might not be available in all languages.

9 Printer management tools

This section contains the following topics:

- The HP Smart app
- Toolbox (Windows)
- HP Utility (OS X and macOS)
- Embedded web server

The HP Smart app

The HP Smart app allows you to view current printer information and update printer settings. You can view ink status, printer and network information. You can also print diagnostic reports, access print quality tools, and view and change printer settings. For more information about the HP Smart app, see Use the HP Smart app to print, scan, and troubleshoot from an iOS, Android, or Windows 10 device.

Toolbox (Windows)

The Toolbox provides maintenance information about the printer.

NOTE: The Toolbox can be installed along with the HP printer software if the computer meets system requirements. For information about system requirements, see Specifications.

To open the Toolbox

1. Open the HP printer software. For more information, see Open the HP printer software (Windows).
2. Click **Print, Scan & Fax** .
3. Click **Maintain Your Printer**.

HP Utility (OS X and macOS)

HP Utility contains tools to configure print settings, calibrate the printer, order supplies online, and find website support information.

NOTE: The features available in HP Utility vary depending on the selected printer.

Ink level warnings and indicators provide estimates for planning purposes only. When an indicator shows low-ink levels, consider having a replacement cartridge available to avoid possible printing delays. You do not need to replace cartridges until print quality becomes unacceptable.

Double-click HP Utility in the **HP** folder in the **Applications** folder.

Embedded web server

When the printer is connected to a network, you can use the printer's embedded web server (EWS) to view status information, change settings, and manage it from your computer.

NOTE: To view or change some settings, you might need a password.

NOTE: You can open and use the embedded web server without being connected to the Internet. However, some features are not available.

- About cookies
- Open the embedded web server
- Embedded web server cannot be opened

About cookies

The embedded web server (EWS) places very small text files (cookies) on your hard drive when you are browsing. These files let the EWS recognize your computer the next time you visit. For example, if you have configured the EWS language, a cookie helps remember which language you have selected so that the next time you access the EWS, the pages are displayed in that language. Some cookies (such as the cookie that stores customer-specific preferences) are stored on the computer until you clear them manually.

You can configure your browser to accept all cookies, or you can configure it to alert you every time a cookie is offered, which allows you to decide which cookies to accept or refuse. You can also use your browser to remove unwanted cookies.

Depending on your printer, if you disable cookies, you also disable one or more of the following features:

- Using some setup wizards
- Remembering the EWS browser language setting
- Personalizing the EWS Home page

For information about how to change your privacy and cookie settings and how to view or delete cookies, see the documentation available with your Web browser.

Open the embedded web server

You can access the embedded web server through either a network or Wi-Fi Direct.

To open the embedded web server through a network

1. Find out the IP address or hostname of the printer by touching (Wireless) or (Ethernet) or by printing a network configuration page.

   NOTE: The printer must be on a network and must have an IP address.

2. In a supported web browser on your computer, type the IP address or hostname assigned to the printer.

   For example, if the IP address is 123.123.123.123, type the following address into the web browser: `http://123.123.123.123`.

To open the embedded web server through Wi-Fi Direct

1. From the printer control panel, touch or swipe down the tab at the top of the screen to open the Dashboard, and then touch (Wi-Fi Direct).
2. Touch (**Settings**).
3. If the display shows that Wi-Fi Direct is **Off** , touch **Wi-Fi Direct** and then switch it on.
4. From your wireless computer, turn wireless on, search for and connect to the Wi-Fi Direct name, for example: DIRECT-**- HP ENVY Photo-7800 (where ** are the unique characters to identify your printer).

   Enter the Wi-Fi Direct password when prompted.
5. In a supported web browser on your computer, type the following address: `http://192.168.223.1`.

Embedded web server cannot be opened

Check your network setup

- Make sure you are not using a phone cord or a crossover cable to connect the printer to the network.
- Make sure the network cable is securely connected to the printer.
- Make sure the network hub, switch, or router is turned on and working correctly.

Check the computer

- Make sure the computer that you are using is connected to the same network as the printer.

Check your web browser

- Make sure the web browser meets the minimum system requirements. For information about system requirements, see Specifications.
- If your web browser uses any proxy settings to connect to the Internet, try turning off these settings. For more information, see the documentation available with your web browser.
- Make sure JavaScript and cookies are enabled in your web browser. For more information, see the documentation available with your web browser.

Check the printer IP address

- Make sure the printer IP address is correct.

  To find out the printer IP address, from the printer control panel, touch or swipe down the tab at the top of the screen to open the Dashboard, touch (Wireless) or (Ethernet).

  To obtain the printer IP address by printing a network configuration page, from the printer control panel, touch or swipe down the tab at the top of the screen to open the Dashboard, touch (**Setup**), touch **Reports** , and then touch **Network Configuration Page**.
- Make sure the printer IP address is valid. The printer IP address should have the similar format as the router IP address. For example, the router IP address might be 192.168.0.1 or 10.0.0.1 and the printer IP address is 192.168.0.5 or 10.0.0.5.

If the printer IP address is similar to 169.254.XXX.XXX or 0.0.0.0, it is not connected to the network.

TIP: If you are using a computer running Windows, you can visit the HP online support website at www.hp.com/support . This website provides information and utilities that can help you correct many common printer problems.

10 Solve a problem

The information in this section suggests solutions to common problems. If your printer is not operating correctly and these suggestions did not solve your problem, try using one of the support services listed in HP support to obtain assistance.

This section contains the following topics:

- Jams and paper-feed issues
- Cartridge issues
- Printing issues
- Copy issues
- Scan issues
- Fax issues
- Network and connection issues
- Printer hardware issues
- Get help from the printer control panel
- Get help from the HP Smart app
- Understand printer reports
- Solve problems using Web Services
- Maintain the printer
- Restore original factory defaults and settings
- HP support

Jams and paper-feed issues

What do you want to do?

Clear a paper jam

Solve paper jam issues	Use an HP online troubleshooting wizard. Instructions for clearing the jam in the printer or in the automatic document feeder and resolving issues with paper or the paper feed.

NOTE: The HP online troubleshooting wizards may not be available in all languages.

Read general instructions in the Help for clearing paper jams

Paper jams can occur in several locations inside the printer.

CAUTION: To prevent possible damage to the printhead, clear paper jams as soon as possible.

To clear an internal paper jam

CAUTION: Avoid pulling jammed paper from the front of the printer. Instead follow the steps below to clear the jam. Pulling out jammed paper from the front of the printer might cause the paper to tear and leave torn pieces inside the printer; this could result in more jams later.

1. Press (the Power button) to turn the printer off.
2. Open the cartridge access door.

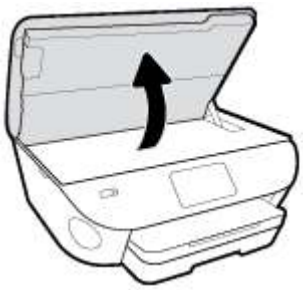

3. Check the paper path inside the printer.
   a. Lift the handle of the paper path cover and remove the cover.

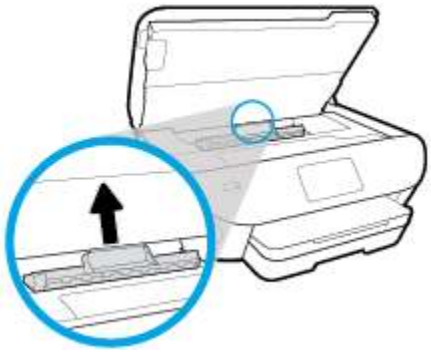

b. Locate any jammed paper inside the printer, grasp it with both hands and pull it towards you.

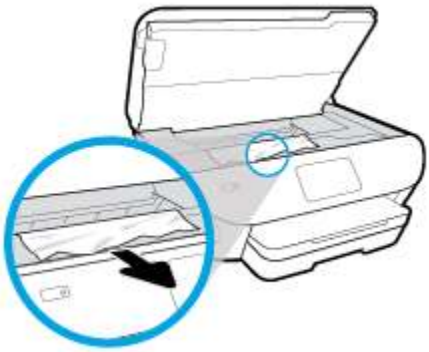

CAUTION: If the paper tears when you are removing it from the rollers, check the rollers and wheels for torn pieces of paper that might be remaining inside the printer.

If you do not remove all the pieces of paper from the printer, more paper jams are likely to occur.

c. Reinsert the paper path cover until it snaps into place.

4. If the problem is not resolved, check the print carriage area inside the printer.

CAUTION: During the process, avoid touching the cable attached to the print carriage.

a. If there is any jammed paper, move the print carriage to the far right of the printer, grasp the jammed paper with both hands, and then pull it towards you.

CAUTION: If the paper tears when you are removing it from the rollers, check the rollers and wheels for torn pieces of paper that might be remaining inside the printer.

If you do not remove all the pieces of paper from the printer, more paper jams are likely to occur.

b. Move the carriage to the far left of the printer, and do the same as in the previous step to remove any torn pieces of paper.

5. Close the cartridge access door.

6. If the problem is still not resolved, check the tray area.

a. Pull out the input tray to extend it.

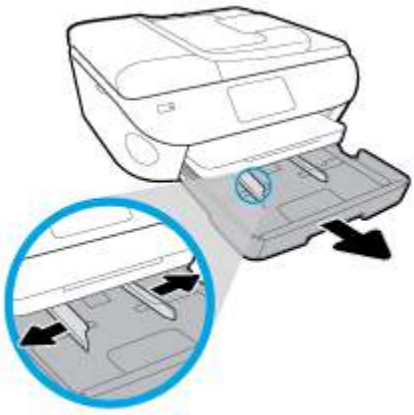

b. Carefully turn the printer on its side to expose the bottom of the printer.

c. Check the gap in the printer where the input tray was. If there is any jammed paper, reach into the gap, grasp the paper with both hands and pull it towards you.

⚠ **CAUTION:** If the paper tears when you are removing it from the rollers, check the rollers and wheels for torn pieces of paper that might be remaining inside the printer.

If you do not remove all of the pieces of paper from the printer, more paper jams are likely to occur.

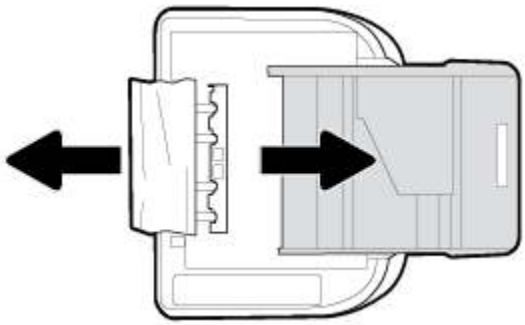

d. Carefully turn the printer up again.

e. Push the paper tray back in.

7. Press ⏻ (the Power button) again to turn the printer on.

To clear a paper jam in the document feeder

1. Lift the cover of the document feeder.

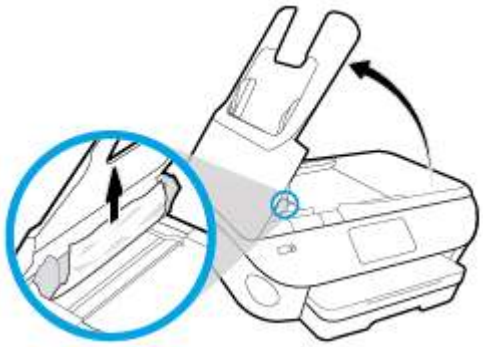

2. Gently pull the jammed paper out of the rollers.

CAUTION: If the paper tears when you are removing it from the rollers, check the rollers and wheels for torn pieces of paper that might remain inside the printer.

If you do not remove all the pieces of paper from the printer, more paper jams are likely to occur.

3. Close the document feeder cover, pressing down firmly until it snaps into place.

Clear a print carriage jam

Resolve a print carriage jam.	Use an HP online troubleshooting wizard. If something is blocking the print carriage or it does not move easily, get step-by-step instructions.

NOTE: The HP online troubleshooting wizards may not be available in all languages.

Read general instructions in the Help for clearing a print carriage jams

Remove any objects, such as paper, that are blocking the print carriage.

NOTE: Do not use any tools or other devices to remove jammed paper. Always use caution when removing jammed paper from inside the printer.

Learn how to avoid paper jams

To help avoid paper jams, follow these guidelines.

- Remove printed papers from the output tray frequently.
- Make sure that you are printing with paper that is not wrinkled, folded, or damaged.
- Prevent curled or wrinkled paper by storing all unused paper flat in a resealable bag.
- Do not use paper that is too thick or too thin for the printer.
- Make sure that the trays are loaded correctly and are not too full. For more information, see Load paper.
- Ensure that paper loaded in the input tray lays flat and the edges are not bent or torn.
- Do not place too much paper in the document feeder tray. For information on the maximum number of sheets allowed in the document feeder, see Specifications.

- Do not mix different paper types and paper sizes in the input tray; the entire stack of paper in the input tray must be the same size and type.
- Adjust the paper-width guides in the input tray to fit snugly against all paper. Make sure the paper-width guides do not bend the paper in the input tray.
- Do not force paper too far inside the input tray.
- If you are printing on both sides of a page, do not print highly saturated images on light weight paper.
- Use paper types that are recommended for the printer.
- If the printer is about to run out of paper, allow the printer to run out of paper first, and then add paper. Do not load paper when the printer is printing.

Solve paper-feed problems

What kind of problem are you having?

- **Paper is not picked up from a tray**
  - Make sure paper is loaded in the tray. For more information, see Load paper. Fan the paper before loading.
  - Make sure the paper-width guides are set to the correct markings in the tray for the paper size you are loading. Also make sure the paper guides are snug, but not tight, against the stack.
  - Ensure that the stack of paper is aligned with the appropriate paper size lines on the bottom of the input tray, and does not exceed the stack height indicated by one or more label on the side or paper-width guide of the input tray.
  - Make sure paper in the tray is not curled. Uncurl paper by bending it in the opposite direction of the curl.
- **Pages are skewing**
  - Make sure the paper loaded in the input tray is aligned to the paper-width guides. If needed, pull out the input tray from the printer and reload the paper correctly, making sure that the paper guides are aligned correctly.
  - Load paper into the printer only when it is not printing.
- **Multiple pages are being picked up**
  - Make sure the paper-width guides are set to the correct markings in the tray for the paper size you are loading. Also make sure the paper-width guides are snug, but not tight, against the stack.
  - Ensure that the stack of paper is aligned with the appropriate paper size lines on the bottom of the input tray, and does not exceed the stack height indicated by one or more label on the side or paper-width guide of the input tray.
  - Make sure the tray is not overloaded with paper.
  - Use HP paper for optimum performance and efficiency.

Cartridge issues

If an error occurs after a cartridge is installed, or if a message indicates a cartridge problem, try removing the cartridges, verifying the protective piece of plastic tape has been removed from each cartridge, and then reinserting the cartridges. If this does not work, clean the cartridge contacts (see the following for details). If the problem is still not resolved, replace the cartridges. For information about replacing cartridges, see Replace the cartridges.

To clean cartridge contacts

CAUTION: The cleaning procedure should take only a few minutes. Make sure that the cartridges are reinstalled in the product as soon as possible. It is not recommended to leave the cartridges outside of the product longer than 30 minutes. This could result in damage to the cartridges.

1. Check that power is on.
2. Open the cartridge access door.

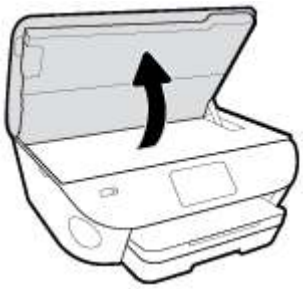

3. Remove the cartridge indicated in the error message.
4. Hold the cartridge by its sides with the bottom pointing up and locate the electrical contacts on the cartridge. The electrical contacts are the small gold-colored dots on the cartridge.

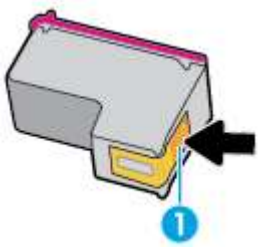

Feature	Description
1	Electrical contacts

5. Wipe only the contacts with a damp lint-free cloth.

CAUTION: Be careful to touch only the contacts, and do not smear any of the ink or other debris elsewhere on the cartridge.

6. On the inside of the printer, locate the contacts in the print carriage. The contacts look like a set of gold-colored bumps positioned to meet the contacts on the cartridge.
7. Use a dry swab or lint-free cloth to wipe the contacts.
8. Reinstall the cartridge.

9. Close the access door, and check if the error message has gone away.

10. If you still receive the error message, turn the product off, and then on again.

NOTE: If one cartridge is causing problems, you can remove it and use the single-cartridge mode to operate the HP ENVY Photo 7800 series with only one cartridge.

Printing issues

What do you want to do?

Fix problems with page not printing (unable to print)

HP Print and Scan Doctor	The HP Print and Scan Doctor is a utility that will try to diagnose and fix the issue automatically. **NOTE:** This utility is only available for Windows operating system.
Troubleshoot problems with print jobs not printing	Use an HP online troubleshooting wizard. Get step-by-step instructions if the printer is not responding or printing.

NOTE: The HP Print and Scan Doctor and the HP online troubleshooting wizards may not be available in all languages.

Read general instructions in the Help for unable to print issues

To resolve print issues (Windows)

Make sure that the printer is turned on and that there is paper in the tray. If you are still unable to print, try the following in order:

1. Check for error messages from the printer display and resolve them by following the onscreen instructions.
2. If your computer is connected to the printer with a USB cable, disconnect and reconnect the USB cable. If your computer is connected to the printer with a wireless connection, confirm that the connection is working.
3. Verify that the printer is not paused or offline.

   #### To verify that the printer is not paused or offline

   a. Depending on your operating system, do one of the following:

      - **Windows 10**: From the Windows **Start** menu, select **Windows System** from the app list, select **Control Panel**, and then click **View devices and printers** under **Hardware and Sound**.
      - **Windows 8.1** and **Windows 8**: Point to or tap the upper-right corner of the screen to open the Charms bar, click the **Settings** icon, click or tap **Control Panel**, and then click or tap **View devices and printers**.
      - **Windows 7**: From the Windows **Start** menu, click **Devices and Printers**.
      - **Windows Vista**: From the Windows **Start** menu, click **Control Panel**, and then click **Printers**.
      - **Windows XP**: From the Windows **Start** menu, click **Control Panel**, and then click **Printers and Faxes**.

   b. Either double-click the icon for your printer or right-click the icon for your printer and select **See what's printing** to open the print queue.

c. On the **Printer** menu, make sure there are no check marks next to **Pause Printing** or **Use Printer Offline**.

d. If you made any changes, try to print again.

4. Verify that the printer is set as the default printer.

To verify that the printer is set as the default printer

a. Depending on your operating system, do one of the following:

- **Windows 10**: From the Windows **Start** menu, select **Windows System** from the app list, select **Control Panel**, and then click **View devices and printers** under **Hardware and Sound**.
- **Windows 8.1** and **Windows 8**: Point to or tap the upper-right corner of the screen to open the Charms bar, click the **Settings** icon, click or tap **Control Panel**, and then click or tap **View devices and printers**.
- **Windows 7**: From the Windows **Start** menu, click **Devices and Printers**.
- **Windows Vista**: From the Windows **Start** menu, click **Control Panel**, and then click **Printers**.
- **Windows XP**: From the Windows **Start** menu, click **Control Panel**, and then click **Printers and Faxes**.

b. Make sure the correct printer is set as the default printer.

The default printer has a check mark in a black or green circle next to it.

c. If the wrong printer is set as the default printer, right-click the correct printer and select **Set as Default Printer**.

d. Try using your printer again.

5. Restart the print spooler.

To restart the print spooler

a. Depending on your operating system, do one of the following:

Windows 10

i. From the Windows **Start** menu, select **Windows Administrative Tools** from the app list, and then select **Services**.

ii. Right-click the **Print Spooler**, and then click **Properties**.

iii. On the **General** tab, next to **Startup type**, make sure that **Automatic** is selected.

iv. If the service is not already running, under **Service status**, click **Start**, and then click **OK**.

Windows 8.1 and Windows 8

i. Point to or tap the upper-right corner of the screen to open the Charms bar, and then click the **Settings** icon.

ii. Click or tap **Control Panel**, and then click or tap **System and Security**.

iii. Click or tap **Administrative Tools**, and then double-click or double-tap **Services**.

iv. Right-click or touch and hold **Print Spooler**, and then click **Properties**.

v. On the **General** tab, next to **Startup type**, make sure that **Automatic** is selected.

vi. If the service is not already running, under **Service status**, click or tap **Start**, and then click or tap **OK**.

Windows 7

i. From the Windows **Start** menu, click **Control Panel**, **System and Security**, and then **Administrative Tools**.

ii. Double-click **Services**.

iii. Right-click the **Print Spooler**, and then click **Properties**.

iv. On the **General** tab, next to **Startup type**, make sure that **Automatic** is selected.

v. If the service is not already running, under **Service status**, click **Start**, and then click **OK**.

Windows Vista

i. From the Windows **Start** menu, click **Control Panel**, **System and Maintenance**, **Administrative Tools**.

ii. Double-click **Services**.

iii. Right-click the **Print Spooler service**, and then click **Properties**.

iv. On the **General** tab, next to **Startup type**, make sure that **Automatic** is selected.

v. If the service is not already running, under **Service status**, click **Start**, and then click **OK**.

Windows XP

i. From the Windows **Start** menu, right click **My Computer**.

ii. Click **Manage**, and then click **Services and Applications**.

iii. Double-click **Services**, and then select **Print Spooler**.

iv. Right-click **Print Spooler**, and click **Restart** to restart the service.

b. Make sure the correct printer is set as the default printer.

   The default printer has a check mark in a black or green circle next to it.

c. If the wrong printer is set as the default printer, right-click the correct printer and select **Set as Default Printer**.

d. Try using your printer again.

6. Restart the computer.

7. Clear the print queue.

To clear the print queue

a. Depending on your operating system, do one of the following:

- **Windows 10**: From the Windows **Start** menu, select **Windows System** from the app list, select **Control Panel**, and then click **View devices and printers** under **Hardware and Sound**.
- **Windows 8.1** and **Windows 8**: Point to or tap the upper-right corner of the screen to open the Charms bar, click the **Settings** icon, click or tap **Control Panel**, and then click or tap **View devices and printers**.
- **Windows 7**: From the Windows **Start** menu, click **Devices and Printers**.
- **Windows Vista**: From the Windows **Start** menu, click **Control Panel**, and then click **Printers**.
- **Windows XP**: From the Windows **Start** menu, click **Control Panel**, and then click **Printers and Faxes**.

b. Double-click the icon for your printer to open the print queue.

c. On the **Printer** menu, click **Cancel all documents** or **Purge Print Document**, and then click **Yes** to confirm.

d. If there are still documents in the queue, restart the computer and try printing again after the computer has restarted.

e. Check the print queue again to make sure it is clear, and then try to print again.

To check the power connection and reset the printer

1. Make sure the power cord is firmly connected to the printer.

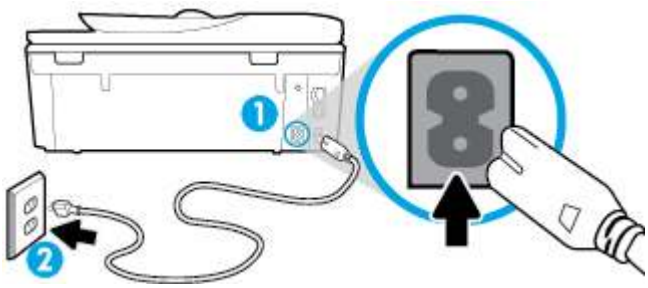

1	Power connection to the printer
2	Connection to a power outlet

2. Look at (the Power button) located on the printer. If it is not lit, the printer is turned off. Press (the Power button) to turn on the printer.

NOTE: If the printer is not receiving electrical power, connect it to another power outlet.

3. With the printer turned on, disconnect the power cord from the rear of the printer.
4. Unplug the power cord from the wall outlet.
5. Wait at least 15 seconds.
6. Plug the power cord back into the wall outlet.
7. Reconnect the power cord to the rear of the printer.

8. If the printer does not turn on by itself, press (the Power button) to turn on the printer.
9. Try using the printer again.

To resolve print issues (OS X and macOS)

1. Check for error messages and resolve.
2. Disconnect and reconnect the USB cable.
3. Verify that the product is not paused or offline.

To verify that the product is not paused or offline

a. In **System Preferences**, click **Printers & Scanners** .
b. Click the **Open Print Queue** button.
c. Click a print job to select it.

   Use the following buttons to manage the print job:

   - **Delete**: Cancel the selected print job.
   - **Hold**: Pause the selected print job.
   - **Resume**: Continue a paused print job.
   - **Pause Printer**: Pause all print jobs in the print queue.

d. If you made any changes, try to print again.

4. Restart the computer.

Fix print quality issues

Step-by-step instructions for resolving most print quality issues	Troubleshoot print quality issues online.

Read general instructions in the Help for resolving print quality issues

NOTE: To avoid print quality problems, always turn the printer off using (the Power button), and wait until (the Power button) light goes out before you pull the plug or turn off a power strip. This allows the printer to move the cartridges to a capped position, where they are protected from drying out.

To improve print quality (Windows)

1. Make sure you are using original HP cartridges.
2. Make sure you are using an appropriate paper type.

   Always make sure the paper you are printing on is flat and is not damaged, curled, or wrinkled. For more information, see Tips for selecting and using paper.

   For best print quality, use high quality HP paper, or papers that adhere to the ColorLok® standard. For more information, see Paper basics.

   For best results when printing images, use HP Advanced Photo Paper.

   Store specialty paper in its original packaging inside a resealable plastic bag on a flat surface in a cool, dry place.

   When you are ready to print, remove only the paper you plan to use immediately. When you have finished printing, return any unused photo paper to the plastic bag. This prevents the photo paper from curling.
3. Make sure you have selected the appropriate paper type and print resolution in the software print settings.

   NOTE: Selecting a higher print quality can result in a printout with higher definition but could use more ink and take longer to print.
4. Check the estimated ink levels to determine if the cartridges are low on ink. For more information, see Check the estimated ink levels . If the cartridges are low on ink, consider replacing them.
5. Align the cartridges.

   #### To align the cartridges from the printer software

   NOTE: Aligning the cartridges ensures the high-quality output. The cartridges do not have to be realigned when they are replaced.

   a. Load letter or A4 unused plain white paper into the input tray.

   b. Open the HP printer software. For more information, see Open the HP printer software (Windows).

   c. In the printer software, click **Print, Scan & Fax** , and then click **Maintain Your Printer** to access the **Printer Toolbox**.

   d. In **Printer Toolbox**, click **Align Cartridges** on the **Device Services** tab. The printer prints an alignment sheet.
6. Print a diagnostics page if the cartridges are not low on ink.

   #### To print a diagnostics page from the printer software

   a. Load letter, A4, or legal unused plain white paper into the input tray.

   b. Open the HP printer software. For more information, see Open the HP printer software (Windows).

   c. In the printer software, click **Print, Scan & Fax** , and then click **Maintain Your Printer** to access the printer toolbox.

   d. Click **Print Diagnostic Information** on the **Device Reports** tab to print a diagnostics page.

7. Review the blue, magenta, yellow, and black boxes on the diagnostics page. If you are seeing streaks in the color and black boxes, or no ink in portions of the boxes, then automatically clean the cartridges.

   ### To clean the cartridges from the printer software

   a. Load letter, A4, or legal unused plain white paper into the input tray.

   b. Open the HP printer software. For more information, see Open the HP printer software (Windows).

   c. In the printer software, click **Print, Scan & Fax** and then click **Maintain Your Printer** to access the **Printer Toolbox**.

   d. Click **Clean Cartridges** on the **Device Services** tab. Follow the onscreen instructions.

8. If cleaning the cartridges does not solve the problem, contact HP support. Go to www.hp.com/support . This website provides information and utilities that can help you correct many common printer problems. If prompted, select your country/region, and then click **All HP Contacts** for information on calling for technical support.

To improve print quality (OS X and macOS)

1. Make sure you are using original HP cartridges.
2. Check the paper type.

   For best print quality, use high quality HP paper, or papers that adhere to the ColorLok® standard. For more information, see Paper basics.

   Always make sure the paper you are printing on is flat. For best results when printing images, use HP Advanced Photo Paper.

   Store specialty paper in its original packaging inside a resealable plastic bag on a flat surface in a cool, dry place. When you are ready to print, remove only the paper you plan to use immediately. When you have finished printing, return any unused photo paper to the plastic bag. This prevents the photo paper from curling.

3. Make sure you have selected the appropriate paper type and print quality in the **Print** dialog.
4. Check the estimated ink levels to determine if the cartridges are low on ink.

   Consider replacing the print cartridges if they are low on ink.

5. Align the printhead.

   ### To align the printhead from the software

   a. Load Letter or A4 plain, white paper in the input tray.

   b. Open HP Utility.

   NOTE: HP Utility is located in the **HP** folder in the **Applications** folder.

   c. Select your printer from the list of devices at the left of the window.

   d. Click **Align**.

   e. Click **Align** and follow the onscreen instructions.

   f. Click **All Settings** to return to the **Information and Support** pane.

6. Print a test page.

To print a test page

a. Load Letter or A4 plain, white paper in the input tray.

b. Open HP Utility.

> **NOTE:** HP Utility is located in the **HP** folder in the **Applications** folder.

c. Select your printer from the list of devices at the left of the window.

d. Click **Test Page**.

e. Click the **Print Test Page** button, and follow the onscreen instructions.

7. If the diagnostic page shows steaks or missing portions of the text or colored boxes, clean the printhead automatically.

To automatically clean the printhead

a. Load Letter or A4 plain, white paper in the input tray.

b. Open HP Utility.

> **NOTE:** HP Utility is located in the **HP** folder in the **Applications** folder.

c. Select your printer from the list of devices at the left of the window.

d. Click **Clean Printheads**.

e. Click **Clean**, and follow the onscreen instructions.

> **CAUTION:** Clean the printhead only when necessary. Unnecessary cleaning wastes ink and shortens the life of the print head.

> **NOTE:** If print quality still seems poor after you complete cleaning, try aligning the printhead. If print quality problems persist after cleaning and aligning, contact HP support.

f. Click **All Settings** to return to the **Information and Support** pane.

To improve print quality from the printer display

1. Make sure you are using original HP cartridges.
2. Make sure you have selected the appropriate paper type and print quality.
3. Check the estimated ink levels to determine if the cartridges are low on ink. For more information, see Check the estimated ink levels . If the cartridges are low on ink, consider replacing them.
4. Align the cartridges.

To align the cartridges from the printer display

a. Load Letter, A4, or legal unused plain white paper into the input tray.

b. From the printer control panel, touch or swipe down the tab at the top of the screen to open the Dashboard, and then touch (**Setup**).

c. Touch **Printer Maintenance** , touch **Align Cartridges**, and then follow the onscreen instructions.

5. Print a diagnostics page if the cartridges are not low on ink.

To print a diagnostics page from the printer display

a. Load letter, A4, or legal unused plain white paper into the input tray.

b. From the printer control panel, touch or swipe down the tab at the top of the screen to open the Dashboard, and then touch (**Setup**).

c. Touch **Reports** .

d. Touch **Print Quality Report**.

6. Review the blue, magenta, yellow, and black boxes on the diagnostics page. If you are seeing streaks in the color and black boxes, or no ink in portions of the boxes, then automatically clean the cartridges. See the following graphic of a color blocks without defects example.



To clean the cartridges from the printer display

a. Load Letter, A4, or legal unused plain white paper into the input tray.

b. From the printer control panel, touch or swipe down the tab at the top of the screen to open the Dashboard, and then touch (**Setup**).

c. Touch **Printer Maintenance** , select **Clean Cartridges**, and then follow the onscreen instructions.

7. If cleaning the cartridges does not solve the problem, contact HP support. Go to www.hp.com/support . This website provides information and utilities that can help you correct many common printer problems. If prompted, select your country/region, and then click **All HP Contacts** for information on calling for technical support.

Copy issues

Troubleshoot copy problems	Use an HP online troubleshooting wizard. Get step-by-step instructions if the printer does not create a copy, or if your printouts are low quality.

NOTE: The HP online troubleshooting wizards may not be available in all languages.

Tips for copy and scan success

Scan issues

HP Print and Scan Doctor	The HP Print and Scan Doctor is a utility that will try to diagnose and fix the issue automatically. **NOTE:** This utility is only available for Windows operating system.
Solve scan problems	Use an HP online troubleshooting wizard. Get step-by-step instructions if you cannot create a scan or if your scans are low quality.

NOTE: The HP Print and Scan Doctor and the HP online troubleshooting wizards may not be available in all languages.

Tips for copy and scan success

Fax issues

Run the fax test report first to see if there is a problem with your fax setup. If the test passes and you are still having problems faxing, check the fax settings listed in the report to verify that the settings are correct.

Run the fax test

You can test your fax setup to check the status of the printer and to make sure it is set up correctly for faxing. Perform this test only after you have completed fax setup on the printer. The test does the following:

- Tests the fax hardware
- Verifies that the correct type of phone cord is connected to the printer
- Checks that the phone cord is plugged into the correct port
- Checks for a dial tone
- Tests the status of your phone line connection
- Checks for an active phone line

To test fax setup via the printer control panel

1. Set up the printer for faxing according to your particular home or office setup instructions.
2. Make sure the cartridges are installed and that full-size paper is loaded in the input tray before starting the test.
3. On the **Fax** screen, flick to the right and touch **Setup** , touch **Setup Wizard**, and then follow the onscreen instructions.

   The printer displays the status of the test on the display and prints a report.
4. Review the report.
   - If the fax test failed, review the solutions below.
   - If the fax test passed and you are still having problems faxing, verify that the fax settings listed in the report are correct. You can also use HP's online troubleshooting wizard. For information about the online troubleshooting wizard, see Troubleshoot fax problems

What to do if the fax test failed

If you ran a fax test and the test failed, review the report for basic information about the error. For more detailed information, check the report to see which part of the test failed, and then review the appropriate topic in this section for solutions to try.

The "Fax Hardware Test" failed

- Turn the printer off by pressing (the Power button) located on the front left side of the printer and then unplug the power cord from the back of the printer. After a few seconds, plug the power cord in again, and then turn the power on. Run the test again. If the test fails again, continue reviewing the troubleshooting information in this section.
- Try to send or receive a test fax. If you can send or receive a fax successfully, there might not be a problem.

- If you are running the test from the **Fax Setup Wizard** (Windows) or **HP Utility** (OS X and macOS), make sure the printer is not busy completing another task, such as receiving a fax or making a copy. Check the display for a message indicating that the printer is busy. If it is busy, wait until it is finished and in the idle state before running the test.
- Make sure you use the phone cord that came with the printer. If you do not use the supplied phone cord to connect from the telephone wall jack to the printer, you might not be able to send or receive faxes. After you plug in the phone cord that came with the printer, run the fax test again.
- If you are using a phone splitter, this can cause faxing problems. (A splitter is a two-cord connector that plugs into a telephone wall jack.) Try removing the splitter and connecting the printer directly to the telephone wall jack.

After you resolve any problems found, run the fax test again to make sure it passes and the printer is ready for faxing. If the **Fax Hardware Test** continues to fail and you experience problems faxing, contact HP support. Go to www.hp.com/support . This website provides information and utilities that can help you correct many common printer problems. If prompted, select your country/region, and then click **All HP Contacts** for information on calling for technical support.

The "Fax Connected to Active Telephone Wall Jack" test failed

- Check the connection between the telephone wall jack and the printer to make sure the phone cord is secure.
- Make sure you use the phone cord that came with the printer. If you do not use the supplied phone cord to connect from the telephone wall jack to the printer, you might not be able to send or receive faxes. After you plug in the phone cord that came with the printer, run the fax test again.
- Make sure you have correctly connected the printer to the telephone wall jack. Using the phone cord supplied in the box with the printer, connect one end to your telephone wall jack, then connect the other end to the port labeled 1-LINE on the back of the printer.
- If you are using a phone splitter, this can cause faxing problems. (A splitter is a two-cord connector that plugs into a telephone wall jack.) Try removing the splitter and connecting the printer directly to the telephone wall jack.
- Try connecting a working phone and phone cord to the telephone wall jack that you are using for the printer and check for a dial tone. If you do not hear a dial tone, contact your telephone company and have them check the line.
- Try to send or receive a test fax. If you can send or receive a fax successfully, there might not be a problem.

After you resolve any problems found, run the fax test again to make sure it passes and the printer is ready for faxing.

The "Phone Cord Connected to Correct Port on Fax" test failed

Make sure you use the phone cord that came with the printer. If you do not use the supplied phone cord to connect from the telephone wall jack to the printer, you might not be able to send or receive faxes. After you plug in the phone cord that came with the printer, run the fax test again.

If you are using a phone splitter, this can cause faxing problems. (A splitter is a two-cord connector that plugs into a telephone wall jack.) Try removing the splitter and connecting the printer directly to the telephone wall jack.

Plug the phone cord into the correct port

1. Using the phone cord supplied in the box with the printer, connect one end to your telephone wall jack, then connect the other end to the port labeled 1-LINE on the back of the printer.

NOTE: If you use the 2-EXT port to connect to the telephone wall jack, you cannot send or receive faxes. The 2-EXT port should only be used to connect other equipment, such as an answering machine.

Figure 10-1 Back view of the printer

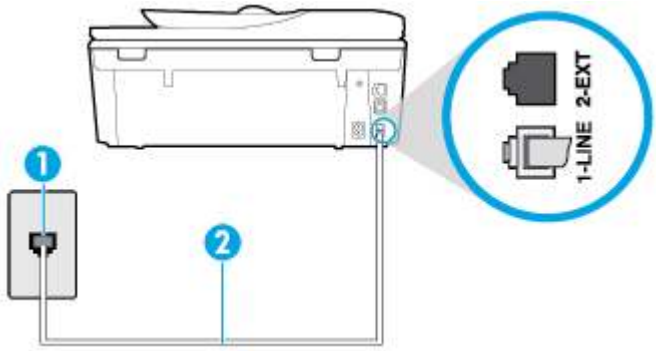

1	Telephone wall jack
2	Use the phone cord supplied in the box with the printer to connect to the "1-LINE" port

2. After you have connected the phone cord to the port labeled 1-LINE, run the fax test again to make sure it passes and the printer is ready for faxing.

3. Try to send or receive a test fax.

The "Using Correct Type of Phone Cord with Fax" test failed

- Make sure you used the phone cord supplied in the box with the printer to connect to the telephone wall jack. One end of the phone cord should be connected to the port labeled 1-LINE on the back of the printer, and the other end to your telephone wall jack, as shown in the illustration.

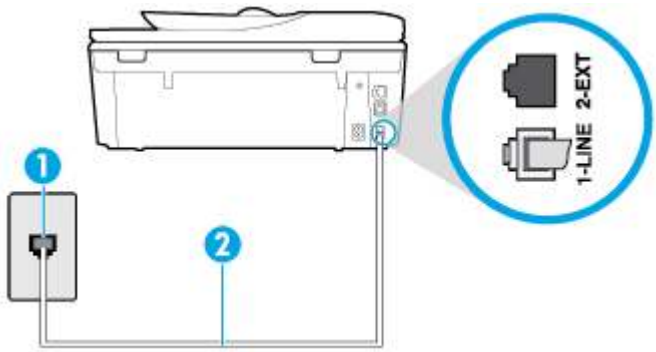

1	Telephone wall jack
2	Use the phone cord supplied in the box with the printer to connect to the "1-LINE" port

If the phone cord that came with the printer is not long enough, you can use a longer 2-wire phone cord to extend the length. You can purchase the cord at an electronics store that carries phone accessories.

- Check the connection between the telephone wall jack and the printer to make sure the phone cord is secure.

- Make sure you use the phone cord that came with the printer when possible. If you do not use the supplied phone cord to connect from the telephone wall jack to the printer, you might not be able to send or receive faxes. After you plug in the phone cord that came with the printer, run the fax test again.
- If you are using a phone splitter, this can cause faxing problems. (A splitter is a two-cord connector that plugs into a telephone wall jack.) Try removing the splitter and connecting the printer directly to the telephone wall jack.

The "Dial Tone Detection" test failed

- Other equipment, which uses the same phone line as the printer, might be causing the test to fail. To find out if other equipment is causing a problem, disconnect everything from the phone line, and then run the test again. If the **Dial Tone Detection Test** passes without the other equipment, then one or more pieces of the equipment is causing problems; try adding them back one at a time and rerunning the test each time, until you identify which piece of equipment is causing the problem.
- Try connecting a working phone and phone cord to the telephone wall jack that you are using for the printer and check for a dial tone. If you do not hear a dial tone, contact your telephone company and have them check the line.
- Make sure you have correctly connected the printer to the telephone wall jack. Using the phone cord supplied in the box with the printer, connect one end to your telephone wall jack, then connect the other end to the port labeled 1-LINE on the back of the printer.
- If you are using a phone splitter, this can cause faxing problems. (A splitter is a two-cord connector that plugs into a telephone wall jack.) Try removing the splitter and connecting the printer directly to the telephone wall jack.
- If your telephone system is not using a standard dial tone, such as some private branch exchange (PBX) systems, this might cause the test to fail. This does not cause a problem sending or receiving faxes. Try sending or receiving a test fax.
- Check to make sure the country/region setting is set appropriately for your country/region. If the country/region setting is not set or is set incorrectly, the test might fail and you might have problems sending and receiving faxes.
- Make sure you connect the printer to an analog phone line or you cannot send or receive faxes. To check if your phone line is digital, connect a regular analog phone to the line and listen for a dial tone. If you do not hear a normal sounding dial tone, it might be a phone line set up for digital phones. Connect the printer to an analog phone line and try sending or receiving a fax.
- Make sure you use the phone cord that came with the printer. If you do not use the supplied phone cord to connect from the telephone wall jack to the printer, you might not be able to send or receive faxes. After you plug in the phone cord that came with the printer, run the fax test again.

After you resolve any problems found, run the fax test again to make sure it passes and the printer is ready for faxing. If the **Dial Tone Detection** test continues to fail, contact your telephone company and have them check the phone line.

The "Fax Line Condition" test failed

- Make sure you connect the printer to an analog phone line or you cannot send or receive faxes. To check if your phone line is digital, connect a regular analog phone to the line and listen for a dial tone. If you do not hear a normal sounding dial tone, it might be a phone line set up for digital phones. Connect the printer to an analog phone line and try sending or receiving a fax.
- Check the connection between the telephone wall jack and the printer to make sure the phone cord is secure.

- Make sure you have correctly connected the printer to the telephone wall jack. Using the phone cord supplied in the box with the printer, connect one end to your telephone wall jack, then connect the other end to the port labeled 1-LINE on the back of the printer.
- Other equipment, which uses the same phone line as the printer, might be causing the test to fail. To find out if other equipment is causing a problem, disconnect everything from the phone line, and then run the test again.
  - If the **Fax Line Condition Test** passes without the other equipment, then one or more pieces of the equipment is causing problems; try adding them back one at a time and rerunning the test each time, until you identify which piece of equipment is causing the problem.
  - If the **Fax Line Condition Test** fails without the other equipment, connect the printer to a working phone line and continue reviewing the troubleshooting information in this section.
- If you are using a phone splitter, this can cause faxing problems. (A splitter is a two-cord connector that plugs into a telephone wall jack.) Try removing the splitter and connecting the printer directly to the telephone wall jack.
- Make sure you use the phone cord that came with the printer. If you do not use the supplied phone cord to connect from the telephone wall jack to the printer, you might not be able to send or receive faxes. After you plug in the phone cord that came with the printer, run the fax test again.

After you resolve any problems found, run the fax test again to make sure it passes and the printer is ready for faxing. If the **Fax Line Condition** test continues to fail and you experience problems faxing, contact your telephone company and have them check the phone line.

Troubleshoot fax problems

Troubleshoot fax problems	Use an HP online troubleshooting wizard. Resolve problems sending or receiving a fax or faxing to your computer.

NOTE: The HP online troubleshooting wizards may not be available in all languages.

Read general instructions in the Help for specific fax problems

What kind of fax problem are you having?

The display always shows Phone Off Hook

- You are using the wrong type of phone cord. Make sure you are using the 2-wire phone cord that came with the printer to connect the printer to your phone line. If the phone cord that came with the printer is not long enough, you can use a longer phone cord to extend the length. You can purchase the cord at an electronics store that carries phone accessories.
- Other equipment that uses the same phone line as the printer might be in use. Make sure extension phones (phones on the same phone line, but not connected to the printer) or other equipment are not in use or off the hook. For example, you cannot use the printer for faxing if an extension phone is off the hook, or if you are using a computer dial-up modem to send email or access the Internet.

The printer is having problems sending and receiving faxes

- Make sure the printer is turned on. Look at the display on the printer. If the display is blank and (the Power button) light is not lit, the printer is turned off. Make sure the power cord is firmly connected to the printer and plugged into a power outlet. Press (the Power button) to turn on the printer.

  After turning on the printer, HP recommends you wait five minutes before sending or receiving a fax. The printer cannot send or receive faxes while it is initializing after being turned on.

- Make sure you used the phone cord supplied in the box with the printer to connect to the telephone wall jack. One end of the phone cord should be connected to the port labeled 1-LINE on the back of the printer and the other end to your telephone wall jack, as shown in the illustration.

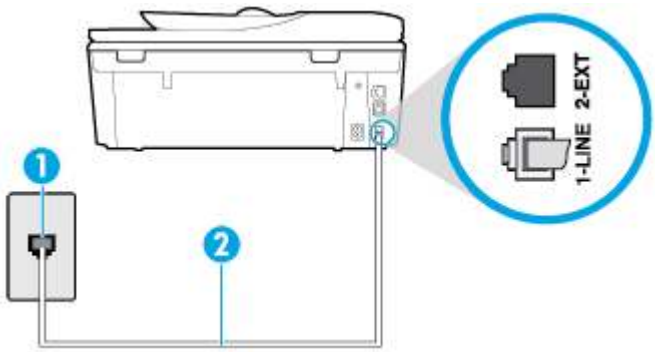

1	Telephone wall jack
2	Use the phone cord supplied in the box with the printer to connect to the "1-LINE" port

  If the phone cord that came with the printer is not long enough, you can use a longer 2-wire phone cord to extend the length. You can purchase the cord at an electronics store that carries phone accessories.

- Try connecting a working phone and phone cord to the telephone wall jack that you are using for the printer and check for a dial tone. If you do not hear a dial tone, call your local telephone company for service.

- Other equipment, which uses the same phone line as the printer, might be in use. For example, you cannot use the printer for faxing if an extension phone is off the hook, or if you are using a computer dial-up modem to send an email or access the Internet.

- Check to see if another process has caused an error. Check the display or your computer for an error message providing information about the problem and how to solve it. If there is an error, the printer cannot send or receive a fax until the error condition is resolved.

- The phone line connection might be noisy. Phone lines with poor sound quality (noise) can cause faxing problems. Check the sound quality of the phone line by plugging a phone into the telephone wall jack and listening for static or other noise. If you hear noise, turn **Error Correction Mode** (ECM) off and try faxing again. If the problem persists, contact your telephone company.

- If you are using a digital subscriber line (DSL) service, make sure that you have a DSL filter connected or you cannot fax successfully.

- Make sure the printer is not connected to a telephone wall jack that is set up for digital phones. To check if your phone line is digital, connect a regular analog phone to the line and listen for a dial tone. If you do not hear a normal sounding dial tone, it might be a phone line set up for digital phones.

- If you are using either a private branch exchange (PBX) or an integrated services digital network (ISDN) converter/terminal adapter, make sure the printer is connected to the correct port and the terminal adapter is set to the correct switch type for your country/region, if possible.
- If the printer shares the same phone line with a DSL service, the DSL modem might not be grounded correctly. If the DSL modem is not grounded correctly, it can create noise on the phone line. Phone lines with poor sound quality (noise) can cause faxing problems. You can check the sound quality of the phone line by plugging a phone into the telephone wall jack and listening for static or other noise. If you hear noise, turn off your DSL modem and completely remove power for at least 15 minutes. Turn the DSL modem back on and listen to the dial tone again.

  NOTE: You might notice static on the phone line again in the future. If the printer stops sending and receiving faxes, repeat this process.

  If the phone line is still noisy, contact your telephone company. For information on turning your DSL modem off, contact your DSL provider for support.
- If you are using a phone splitter, this can cause faxing problems. (A splitter is a two-cord connector that plugs into a telephone wall jack.) Try removing the splitter and connecting the printer directly to the telephone wall jack.

The printer cannot receive faxes, but can send faxes

- If you are not using a distinctive ring service, check to make sure that the **Distinctive Ring** feature on the printer is set to **All Standard Rings** .
- If **Auto Answer** is set to **Off** , you need to receive faxes manually; otherwise, the printer cannot receive the fax.
- If you have a voice mail service at the same phone number you use for fax calls, you must receive faxes manually, not automatically. This means that you must be available to respond in person to incoming fax calls.
- If you have a computer dial-up modem on the same phone line with the printer, check to make sure that the software that came with your modem is not set to receive faxes automatically. Modems that are set up to receive faxes automatically take over the phone line to receive all incoming faxes, which prevents the printer from receiving fax calls.
- If you have an answering machine on the same phone line with the printer, you might have one of the following problems:
  - Your answering machine might not be set up correctly with the printer.
  - Your outgoing message might be too long or too loud to allow the printer to detect fax tones, and the sending fax machine might disconnect.
  - Your answering machine might not have enough quiet time after your outgoing message to allow the printer to detect fax tones. This problem is most common with digital answering machines.

  The following actions might help solve these problems:

  - When you have an answering machine on the same phone line you use for fax calls, try connecting the answering machine directly to the printer.
  - Make sure the printer is set to receive faxes automatically.
  - Make sure the **Rings to Answer** setting is set to a greater number of rings than the answering machine.

- Disconnect the answering machine and then try receiving a fax. If faxing is successful without the answering machine, the answering machine might be causing the problem.
- Reconnect the answering machine and record your outgoing message again. Record a message that is approximately 10 seconds in duration. Speak slowly and at a low volume when recording your message. Leave at least 5 seconds of silence at the end of the voice message. There should be no background noise when recording this silent time. Try to receive a fax again.

NOTE: Some digital answering machines might not retain the recorded silence at the end of your outgoing message. Play back your outgoing message to check.

- If the printer shares the same phone line with other types of phone equipment, such as an answering machine, a computer dial-up modem, or a multi-port switch box, the fax signal level might be reduced. The signal level can also be reduced if you use a splitter or connect extra cables to extend the length of your phone. A reduced fax signal can cause problems during fax reception.

  To find out if other equipment is causing a problem, disconnect everything except the printer from the phone line, and then try to receive a fax. If you can receive faxes successfully without the other equipment, one or more pieces of the other equipment is causing problems; try adding them back one at a time and receiving a fax each time, until you identify which equipment is causing the problem.

- If you have a special ring pattern for your fax phone number (using a distinctive ring service through your telephone company), make sure that the **Distinctive Ring** feature on the printer is set to match.

The printer cannot send faxes, but can receive faxes

- The printer might be dialing too fast or too soon. You might need to insert some pauses in the number sequence. For example, if you need to access an outside line before dialing the phone number, insert a pause following the access number. If your number is 95555555, and 9 accesses an outside line, you might insert pauses as follows: 9-555-5555. To enter a pause in the fax number you are typing, touch the ***** repeatedly, until a dash (**-**) appears on the display.

  You can also send the fax using monitor dialing. This enables you to listen to the phone line as you dial. You can set the pace of your dialing and respond to prompts as you dial.

- The number you entered when sending the fax is not in the proper format or the receiving fax machine is having problems. To check this, try calling the fax number from a telephone and listen for fax tones. If you cannot hear fax tones, the receiving fax machine might not be turned on or connected, or a voice mail service could be interfering with the recipient's phone line. You can also ask the recipient to check the receiving fax machine for any problems.

Fax tones are recorded on my answering machine

- When you have an answering machine on the same phone line you use for fax calls, try connecting the answering machine directly to the printer. If you do not connect the answering machine as recommended, fax tones might be recorded on your answering machine.
- Make sure the printer is set to receive faxes automatically and that the **Rings to Answer** setting is correct. The number of rings to answer for the printer should be greater than the number of rings to answer for the answering machine. If the answering machine and the printer are set to the same number of rings to answer, both devices answer the call and fax tones are recorded on the answering machine.
- Set your answering machine to a low number of rings and the printer to answer in the maximum number of rings supported. (The maximum number of rings varies by country/region.) In this setup, the answering machine answers the call and the printer monitors the line. If the printer detects fax tones,

the printer receives the fax. If the call is a voice call, the answering machine records the incoming message.

Network and connection issues

What do you want to do?

Fix wireless connection

Choose one of the following troubleshooting options.

HP Print and Scan Doctor	The HP Print and Scan Doctor is a utility that will try to diagnose and fix the issue automatically. **NOTE:** This utility is only available for Windows operating system.
Use an HP online troubleshooting wizard	• Troubleshoot your wireless problem, whether your printer has never been connected or it was connected and is no longer working. • Troubleshoot a firewall or antivirus issue, if you suspect that it is preventing your computer from connecting to the printer.

NOTE: The HP Print and Scan Doctor and the HP online troubleshooting wizards may not be available in all languages.

Read general instructions in the Help for wireless troubleshooting

Check the network configuration or print the wireless test report to assist in diagnosing network connection issues.

1. From the Home screen, touch (Wireless) and then touch (**Settings**).
2. Touch **Print Reports**, and then touch **Network Configuration Page** or **Wireless Test Report**.

Find network settings for wireless connection

Choose one of the following troubleshooting options.

HP Print and Scan Doctor	The HP Print and Scan Doctor is a utility that can tell you the network name (SSID) and password (network key). **NOTE:** This utility is only available for Windows operating system. The Windows computer you are running the HP Print and Scan Doctor on should be connected to the network using a wireless connection. To check the wireless settings, open the HP Print and Scan Doctor, click on the **Network** tab at the top, select **Show Advanced Info**, and then select **Show Wireless Info**. You can also find the wireless settings by clicking on the **Network** tab at the top and selecting **Open router web page**.
Use an HP online troubleshooting wizard	Learn how to find your network name (SSID) and wireless password.

NOTE: The HP Print and Scan Doctor and the HP online troubleshooting wizards may not be available in all languages.

Fix Wi-Fi Direct connection

Use an HP online troubleshooting wizard	Troubleshoot your Wi-Fi Direct problem or learn how to configure Wi-Fi Direct.

NOTE: The HP online troubleshooting wizards may not be available in all languages.

Read general instructions in the Help for Wi-Fi Direct troubleshooting

1. Check the printer to confirm that Wi-Fi Direct is turned on:

   ▲ From the printer control panel, touch or swipe down the tab at the top of the screen to open the Dashboard, and then touch (Wi-Fi Direct).

2. From your wireless computer or mobile device, turn on the Wi-Fi connection, and then search for and connect to the Wi-Fi Direct name of your printer.
3. Enter the Wi-Fi Direct password when prompted.
4. If you are using a mobile device, make sure you have installed a compatible printing app. For more information about mobile printing, visit www.hp.com/global/us/en/eprint/mobile_printing_apps.html.

Fix Ethernet connection

Check the following:

- The network is operational and the network hub, switch, or router is turned on.
- The Ethernet cable is properly connected between the printer and the router. The Ethernet cable is plugged into the Ethernet port on the printer and the light near the connector lights up when connected.
- Antivirus programs, including spyware protection programs, are not impacting your network connection to the printer. If you know that antivirus or firewall software is preventing your computer from connecting to the printer, use the HP online firewall troubleshooter to help solve the problem.
- Learn more about using the HP Print and Scan Doctor. Click here to go online for more information. At this time, this website might not be available in all languages.

  Run the HP Print and Scan Doctor to troubleshoot the issue automatically. The utility will try to diagnose and fix the issue. The HP Print and Scan Doctor may not be available in all languages.

Printer hardware issues

TIP: Run the HP Print and Scan Doctor to diagnose and automatically fix printing, scanning, and copying issues. The application is only available in some languages.

To extract the automatic output tray extender manually

If the automatic output tray extender does not deploy automatically, you can extract it manually.

1. Remove the output tray from the printer.

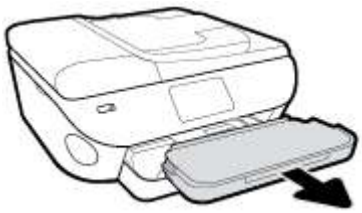

2. On the bottom of the output tray, move the output tray lock to the unlocked position, and then shift the release lever to release the tray extender.

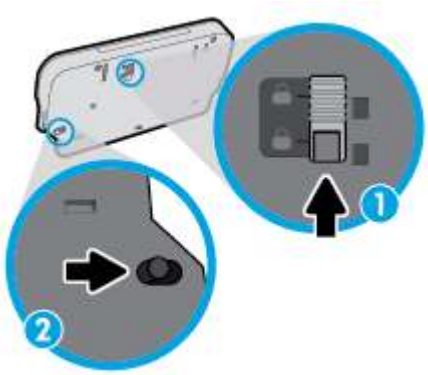

3. Insert the output tray back into the printer leaving the tray extender in the released position.

The printer shuts down unexpectedly

- Check the power and power connections.
- Make sure the printer's power cord is connected firmly to a functioning power outlet.

Resolve printer failure.

▲ Turn the printer off, then on. If that does not resolve the problem, contact HP.

For more information about contacting HP support, see HP support.

Get help from the printer control panel

You can use the printer's help topics to learn more about the printer, and some help topics include animations that guide you through procedures, such as loading paper.

To access the Help menu from the Home screen or contextual help for a screen, touch ? on the printer control panel.

Get help from the HP Smart app

The HP Smart app provides alerts for printer issues (jams and other problems), links to help content, and options to contact support for additional assistance.

Understand printer reports

You can print the following reports to help troubleshoot problems with the printer.

- Printer status report
- Network configuration report
- Print quality report
- Web Services information page

To print a printer report

1. From the printer control panel, touch or swipe down the tab at the top of the screen to open the Dashboard, touch (**Setup**).
2. Touch **Reports** .
3. Select a printer report to print.

NOTE: For information about how to print a wireless test report, see Test the wireless connection

Printer status report

Use the printer status report to view current printer information and cartridge status. Also use the printer status report to help you troubleshoot problems with the printer.

The printer status report also contains a log of recent events.

If you need to call HP, it is often useful to print the printer status report before calling.

Network configuration report

If the printer is connected to a network, you can print a network configuration page to view the network settings for the printer and a list of networks detected by your printer. The last page of the report includes a list of all detectable wireless networks in the area, along with signal strength and the channels being used. This might help you select a channel for your network which is not heavily used by other networks (which will improve network performance).

NOTE: In order to get the list of detected wireless networks in the area, the wireless radio on the printer should be turned on. If it is off or if the printer is connected using Ethernet, the list is not displayed.

You can use the network configuration page to help troubleshoot network connectivity problems. If you need to call HP, it is often useful to print this page before calling.

Print quality report

Print quality problems can have many causes-software settings, a poor image file, or the printing system itself. If you are unhappy with the quality of your prints, a Print Quality Report page can help you determine if the printing system is working correctly.

Web Services information page

Print the Web Services information page to help identify internet connectivity issues which can affect Web Services.

Solve problems using Web Services

If you are having problems using Web Services, such as HP ePrint, check the following:

- Make sure the printer is connected to the Internet using an Ethernet or wireless connection.

  NOTE: You cannot use these web features if the printer is connected using a USB cable.

- Make sure the latest product updates have been installed on the printer.
- Make sure Web Services is enabled on the printer. For more information, see Set up Web Services.
- Make sure the network hub, switch, or router is turned on and working correctly.
- If you are connecting the printer using an Ethernet cable, make sure you are not using a phone cord or a crossover cable to connect the printer to the network, and that the Ethernet cable is securely connected to the printer. For more information, see Network and connection issues.
- If you are connecting the printer using a wireless connection, make sure the wireless network is functioning properly. For more information, see Network and connection issues.
- If you are using HP ePrint, check the following:
  - Make sure the printer's email address is correct.
  - Make sure that the printer's email address is the only address listed in the “To” line of the email message. If other email addresses are listed in the “To” line, the attachments you are sending might not print.
  - Make sure you are sending documents that meet the HP ePrint requirements. For more information, visit HP Connected This site might not be available in all countries/regions.
- If your network uses proxy settings when connecting to the Internet, make sure the proxy settings you are entering are valid:
  - Check the settings being used by the web browser you are using (such as Internet Explorer, Firefox, or Safari).
  - Check with the IT administrator or person who set up your firewall.

    If the proxy settings used by your firewall have changed, you must update these settings in either the printer control panel or the embedded web server. If these settings are not updated, you will not be able to use Web Services.

    For more information, see Set up Web Services.
- You can also print a web access report to help identify internet connectivity issues. For more information about how to print the report, see Understand printer reports.

TIP: For additional help on setting up and using Web Services, visit HP Connected . This site might not be available in all countries/regions.

Maintain the printer

What do you want to do?

Clean the scanner glass

Dust or dirt on the scanner glass, scanner lid backing, or scanner frame can slow down performance, degrade the quality of scans, and affect the accuracy of special features such as fitting copies to a certain page size.

To clean the scanner glass

⚠ **WARNING!** Before cleaning the printer, turn the printer off by pressing ⏻ (the Power button) and unplugging the power cord from the electrical socket.

1. Lift the scanner lid.



2. Clean the scanner glass and lid backing by using a soft, lint-free cloth that has been sprayed with a mild glass cleaner.



⚠ **CAUTION:** Use only glass cleaner to clean the scanner glass. Avoid cleaners that contain abrasives, acetone, benzene, and carbon tetrachloride, all of which can damage the scanner glass. Avoid isopropyl alcohol because it can leave streaks on the scanner glass.

CAUTION: Do not spray the glass cleaner directly on the scanner glass. If too much glass cleaner is applied, the cleaner could leak under the scanner glass and damage the scanner.

3. Close the scanner lid, and turn on the printer.

Clean the exterior

WARNING! Before cleaning the printer, turn the printer off by pressing (the Power button) and unplug the power cord from the electrical socket.

Use a soft, damp, lint-free cloth to wipe dust, smudges, and stains off of the case. Keep fluids away from the interior of the printer, as well as from the printer control panel.

Clean the document feeder

If the document feeder picks up multiple pages or if it does not pick up plain paper, you can clean the rollers and separator pad.

To clean the rollers or separator pad

WARNING! Before cleaning the printer, turn the printer off by pressing (the Power button) and unplug the power cord from the electrical socket.

1. Remove all originals from the document feeder tray.
2. Lift the document feeder cover.

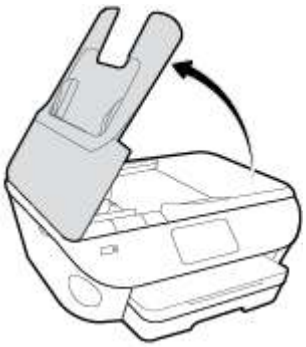

This provides easy access to the rollers (1) and separator pad (2).

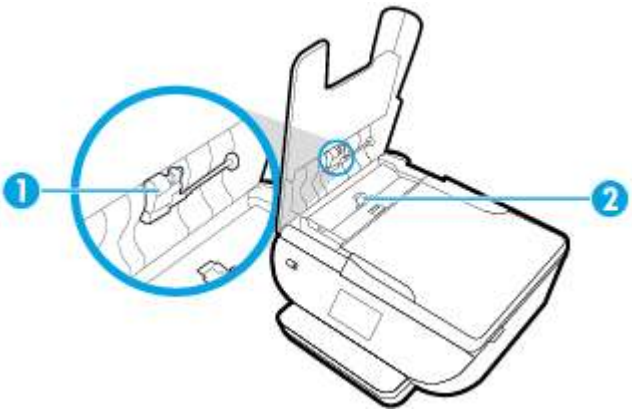

1	Rollers
2	Separator pad

3. Lightly dampen a clean lint-free cloth with distilled water, then squeeze any excess liquid from the cloth.

4. Use the damp cloth to wipe any residue off the rollers or separator pad.

NOTE: If the residue does not come off using distilled water, try using isopropyl (rubbing) alcohol.

5. Close the cover of the document feeder.

Restore original factory defaults and settings

If you disable some functions or change some settings and want to change them back, you can restore the printer to the original factory settings or network settings.

To restore the selected printer functions to the original factory settings

1. From the printer control panel, touch or swipe down the tab at the top of the screen to open the Dashboard, and then touch (**Setup**).
2. Touch **Printer Maintenance** .
3. Touch **Restore**.
4. Touch **Restore Settings**.
5. Select which function you would like to restore to the original factory settings:
   - Copy
   - Scan
   - Fax
   - Photo
   - Network
6. Touch **Restore**.

   A message appears asking you to confirm.
7. Touch **Restore**.

To restore the printer to the original factory defaults

1. From the printer control panel, touch or swipe down the tab at the top of the screen to open the Dashboard, and then touch (**Setup**).
2. Touch **Printer Maintenance** .
3. Touch **Restore**.
4. Touch **Restore Factory Defaults**.

   A message appears stating that the factory defaults will be restored.
5. Touch **Continue**.

To restore the printer to the original network settings

1. From the printer control panel, touch or swipe down the tab at the top of the screen to open the Dashboard, and then touch (**Setup**).
2. Touch **Network Setup**.

3. Touch **Restore Network Settings**.

   A message appears stating that the network defaults will be restored.

4. Touch **Yes**.

5. Print the network configuration page and verify that the network settings have been reset.

NOTE: When you reset the printer network settings, previously configured wireless and Ethernet settings (such as the link speed or IP address) are removed. The IP address is set back to the Automatic mode.

TIP: You can visit the HP online support website at www.hp.com/support for information and utilities that can help you correct many common printer problems.

(Windows) Run the HP Print and Scan Doctor to diagnose and automatically fix printing, scanning, and copying issues. The application is only available in some languages.

HP support

For the latest product updates and support information, visit the printer support website at www.support.hp.com. HP online support provides a variety of options for help with your printer:

	Drivers & downloads: Download software drivers and updates, as well as product manuals and documentation that came in the box with your printer.
	HP support forums: Visit HP Support Forums for answers to common questions and issues. You can view questions posted by other HP customers, or sign in and post your own questions and comments.
	Troubleshooting: Use HP online tools to detect your printer and find recommended solutions.

Contact HP

If you need help from an HP technical support representative to solve a problem, visit the Contact Support website. The following contact options are available at no cost for in-warranty customers (HP agent-assisted support for out-of warranty customers may require a fee):

	Chat with an HP support agent online.
	Call an HP support agent.

When contacting HP support, be prepared to provide the following information:

- Product name (Located on the printer, such as HP ENVY Photo 7800)
- Product number (located near the cartridge access area)



- Serial number (located on the back or bottom of the printer)

Register printer

By taking just a few quick minutes to register, you can enjoy quicker service, more efficient support, and product support alerts. If you did not register your printer while installing the software, you can register now at http://www.register.hp.com.

Additional warranty options

Extended service plans are available for the printer at additional costs. Go to www.hp.com/support , select your country/region and language, then explore the extended warranty options available for your printer.

A Technical information

The technical specifications and international regulatory information for the HP ENVY Photo 7800 series are provided in this section.

For additional specifications, see the printed documentation that came with the HP ENVY Photo 7800 series.

This section contains the following topics:

- HP Company notices
- Specifications
- Regulatory notices
- Environmental product stewardship program

HP Company notices

The information contained herein is subject to change without notice.

All rights reserved. Reproduction, adaptation, or translation of this material is prohibited without prior written permission of HP, except as allowed under the copyright laws. The only warranties for HP products and services are set forth in the express warranty statements accompanying such products and services. Nothing herein should be construed as constituting an additional warranty. HP shall not be liable for technical or editorial errors or omissions contained herein.

© Copyright 2017 HP Development Company, L.P.

Microsoft and Windows are either registered trademarks or trademarks of Microsoft Corporation in the United States and/or other countries.

Bluetooth is a trademark owned by its proprietor and used by HP Inc. under license.

Specifications

Technical specifications for the HP ENVY Photo 7800 series are provided in this section. For more product specifications, see the Product Data Sheet at www.hp.com/support .

- System requirements
- Environmental specifications
- Print specifications
- Scan specifications
- Copy specifications
- Cartridge yield
- Print resolution

System requirements

For information about software and system requirements or future operating system releases and support, visit the HP online support website at www.hp.com/support .

Environmental specifications

- Recommended operating temperature range: 15°C to 32°C (59°F to 90°F)
- Allowable operating temperature range: 5°C to 40°C (41°F to 104°F)
- Humidity: 20% to 80% RH non-condensing (recommended); 25°C maximum dewpoint
- Nonoperating (Storage) temperature range: -40°C to 60°C (-40°F to 140°F)
- In the presence of high electromagnetic fields, it is possible the output from the HP ENVY Photo 7800 series may be slightly distorted.
- HP recommends using a USB cable less than or equal to 3 m (10 feet) in length to minimize injected noise due to potential high electromagnetic fields.

Print specifications

- Print speeds vary according to the complexity of the document.
- Method: drop-on-demand thermal inkjet
- Language: PCL3 GUI

Scan specifications

- Optical Resolution: up to 1200 dpi
- Hardware Resolution: up to 1200 x 1200 dpi
- Enhanced Resolution: up to 1200 x 1200 dpi
- Bitdepth: 24-bit color, 8-bit grayscale (256 levels of gray)

- Maximum scan size from glass: 21.6 x 29.7 cm (8.5 x 11.7 inches)
- Supported File Types: JPEG, PDF
- Twain Version: 1.9

Copy specifications

- Digital image processing.
- Maximum number of copies varies by model.
- Copy speeds vary according to the complexity of the document and model.

Cartridge yield

Visit www.hp.com/go/learnaboutsupplies for more information on estimated cartridge yields.

Print resolution

For a list of supported print resolutions, visit the HP ENVY Photo 7800 series support website at www.hp.com/support.

For information about printing using maximum dpi, see Print using the maximum dpi.

Regulatory notices

The HP ENVY Photo 7800 series meets product requirements from regulatory agencies in your country/region.

This section contains the following topics:

- Regulatory model identification number
- FCC statement
- Notice to users in Korea
- VCCI (Class B) compliance statement for users in Japan
- Notice to users in Japan about the power cord
- Noise emission statement for Germany
- European Union Regulatory Notice
- Visual display workplaces statement for Germany
- Notice to users of the U.S. telephone network: FCC requirements
- Notice to users of the Canadian telephone network
- Notice to users of the German telephone network
- Australia wired fax statement
- Declaration of conformity
- Regulatory information for wireless products

Regulatory model identification number

For regulatory identification purposes, your product is assigned a Regulatory Model Number. The Regulatory Model Number for your product is SNPRC-1701-01. This regulatory number should not be confused with the marketing name (HP ENVY Photo 7800 All-in-One series , etc.) or product numbers (K7R96A-K7R99A, K7S00A-K7S10A, etc.).

FCC statement

The United States Federal Communications Commission (in 47 CFR 15.105) has specified that the following notice be brought to the attention of users of this product.

This equipment has been tested and found to comply with the limits for a Class B digital device, pursuant to Part 15 of the FCC Rules. These limits are designed to provide reasonable protection against harmful interference in a residential installation. This equipment generates, uses and can radiate radio frequency energy and, if not installed and used in accordance with the instructions, may cause harmful interference to radio communications. However, there is no guarantee that interference will not occur in a particular installation. If this equipment does cause harmful interference to radio or television reception, which can be determined by turning the equipment off and on, the user is encouraged to try to correct the interference by one or more of the following measures:

- Reorient or relocate the receiving antenna.
- Increase the separation between the equipment and the receiver.

- Connect the equipment into an outlet on a circuit different from that to which the receiver is connected.
- Consult the dealer or an experienced radio/TV technician for help.

For further information, contact: Manager of Corporate Product Regulations, HP Inc. 1501 Page Mill Road, Palo Alto, CA 94304, U.S.A.

Modifications (part 15.21)

The FCC requires the user to be notified that any changes or modifications made to this device that are not expressly approved by HP may void the user's authority to operate the equipment.

This device complies with Part 15 of the FCC Rules. Operation is subject to the following two conditions: (1) this device may not cause harmful interference, and (2) this device must accept any interference received, including interference that may cause undesired operation.

Notice to users in Korea

B급 기기 (가정용 방송통신기자재)	이 기기는 가정용(B급) 전자파적합기기로서 주로 가정에서 사용하는 것을 목적으로 하며, 모든 지역에서 사용할 수 있습니다.

VCCI (Class B) compliance statement for users in Japan

この装置は、クラス B 情報技術装置です。この装置は、家庭環境で使用することを目的としていますが、この装置がラジオやテレビジョン受信機に近接して使用されると、受信障害を引き起こすことがあります。取扱説明書に従って正しい取り扱いをして下さい。

VCCI-B

Notice to users in Japan about the power cord

製品には、同梱された電源コードをお使い下さい。

同梱された電源コードは、他の製品では使用出来ません。

Noise emission statement for Germany

Geräuschemission

LpA < 70 dB am Arbeitsplatz im Normalbetrieb nach DIN 45635 T. 19

European Union Regulatory Notice



Products bearing the CE marking comply with one or more of the following EU Directives as may be applicable:

R&TTE Directive 1999/5/EC (replaced in 2017 by RED 2014/53/EU); Low Voltage Directive 2014/35/EU; EMC Directive 2014/30/EU; Ecodesign Directive 2009/125/EC; RoHS Directive 2011/65/EU

Compliance with these directives is assessed using the applicable European Harmonised Standards.

The full Declaration of Conformity can be found at the following website:

www.hp.eu/certificates (Search with the product model name or its Regulatory Model Number (RMN), which may be found on the regulatory label.)

The point of contact for regulatory matters is HP Deutschland GmbH, HQ-TRE, 71025, Boeblingen, Germany.

Products with wireless functionality

EMF

- This product meets international guidelines (ICNIRP) for exposure to radio frequency radiation.

  If it incorporates a radio transmitting and receiving device that in normal use, a separation distance of 20 cm ensures that radio frequency exposure levels comply with EU requirements.

Wireless functionality in Europe

- For products with 802.11 b/g/n or Bluetooth radio:
  - This product operates on radio frequency between 2400 MHz and 2483.5 MHz, with a transmit power of 20 dBm (100 mW) or less.
- For products with 802.11 a/b/g/n radio:
  - **CAUTION**: IEEE 802.11x wireless LAN with 5.15-5.35 GHz frequency band is restricted for **indoor use only** in all European Union member states, EFTA (Iceland, Norway, Liechtenstein) and most other European countries (e.g. Switzerland, Turkey, Republic of Serbia). Using this WLAN application outdoor might lead to interference issues with existing radio services.
  - This product operates on radio frequencies between 2400 MHz and 2483.5 MHz, and between 5170 MHz and 5710 MHz, with a transmit power of 20 dBm (100 mW) or less.

European telephone network declaration (Modem/Fax)

HP products with FAX capability comply with the requirements of the R&TTE Directive 1999/5/EC (Annex II) and carry the CE marking accordingly. However, due to differences between the individual PSTNs provided in different countries/regions, the approval does not, of itself, give an unconditional assurance of successful operation on every PSTN network termination point. In the event of problems, you should contact your equipment supplier in the first instance.

Visual display workplaces statement for Germany

GS-Erklärung (Deutschland)

Das Gerät ist nicht für die Benutzung im unmittelbaren Gesichtsfeld am Bildschirmarbeitsplatz vorgesehen. Um störende Reflexionen am Bildschirmarbeitsplatz zu vermeiden, darf dieses Produkt nicht im unmittelbaren Gesichtsfeld platziert werden.

Notice to users of the U.S. telephone network: FCC requirements

This equipment complies with Part 68 of the FCC rules and the requirements adopted by the ACTA. On the rear (or bottom) of this equipment is a label that contains, among other information, a product identifier in the format US:AAAEQ##TXXXX. If requested, this number must be provided to the telephone company.

Applicable connector jack Universal Service Order Codes ("USOC") for the Equipment is: RJ-11C.

A plug and jack used to connect this equipment to the premises wiring and telephone network must comply with the applicable FCC Part 68 rules and requirements adopted by the ACTA. A compliant telephone cord and modular plug is provided with this product. It is designed to be connected to a compatible modular jack that is also compliant. See the installation instructions for details.

The REN is used to determine the quantity of devices, which may be connected to the telephone line. Excessive RENs on the telephone line may result in the devices not ringing in response to an incoming call. In most, but not all, areas, the sum of the RENs should not exceed five (5.0). To be certain of the number of devices that may be connected to the line, as determined by the total RENs, contact the telephone company to determine the maximum REN for the calling area. For products approved after July 23, 2001, the REN for this product is part of the product identifier that has the format US-AAAEQ##TXXXX. The digits represented by ##are the REN without a decimal point (e.g., 00 is a REN of 0.0).

If this equipment causes harm to the telephone network, the telephone company will notify you in advance that temporary discontinuance of service may be required. If advance notice is not practical, the telephone company will notify the customer as soon as possible. Also, you will be advised of your right to file a complaint with the FCC if you believe it is necessary.

The telephone company may make changes in its facilities, equipment, operations, or procedures that could affect the operation of the equipment. If this happens, the telephone company will provide advance notice in order for you to make the necessary modifications in order to maintain uninterrupted service.

If trouble is experienced with this equipment, please contact the manufacturer, or lookelsewhere in this manual, for repair and (or) warranty information. If the equipment is causing harm to the telephone network, the telephone company may request that you disconnect the equipment from the network until the problem is resolved.

Connection to Party Line Service is subject to state tariffs. Contact the state public utility commission, public service commission, or corporation commission for information.

CAUTION: If your home has specially wired alarm equipment connected to the telephone line, ensure the installation of this equipment does not disable your alarm equipment. If you have questions about what will disable alarm equipment, consult your telephone company or a qualified installer.

WHEN PROGRAMMING EMERGENCY NUMBERS AND (OR) MAKING TEST CALLS TO EMERGENCY NUMBERS:

1. Remain on the line and briefly explain to the dispatcher the reason for the call.
2. Perform such activities in the off-peak hours, such as early morning or late evening.

NOTE: The FCC hearing aid compatibility rules for telephones are not applicable to this equipment.

The Telephone Consumer Protection Act of 1991 makes it unlawful for any person to use a computer or other electronic devices, including FAX machines, to send any message unless such message clearly contains in a margin at the top or bottom of each transmitted page or on the first page of the transmission, the date and time it is sent and an identification of the business or other entity, or other individual sending the message and the telephone number of the sending machine or such business, other entity, or individual. (The telephone number provided may not be a 900 number or any other number for which charges exceed local or long-distance transmission charges.)

In order to program this information into your FAX machine, you shoudl complete the steps described in the software.

Notice to users of the Canadian telephone network

Cet appareil est conforme aux spécifications techniques des équipements terminaux d'Industrie Canada. Le numéro d'enregistrement atteste de la conformité de l'appareil. L'abréviation IC qui precede le numéro d'enregistrement indique que l'enregistrement a été effectué dans le cadre d'une Déclaration de conformité stipulant que les spécifications techniques d'Industrie Canada ont été respectées. Néanmoins, cette abréviation ne signifie en aucun cas que l'appareil a été validé par Industrie Canada.

Pour leur propre sécurité, les utilisateurs doivent s'assurer que les prises électriques reliées à la terre de la source d'alimentation, des lignes téléphoniques et du circuit métallique d'alimentation en eau sont, le cas échéant, branchées les unes aux autres. Cette précaution est particulièrement importante dans les zones rurales.

NOTE: **Remarque** Le numéro REN (Ringer Equivalence Number) attribué à chaque appareil terminal fournit une indication sur le nombre maximal de terminaux qui peuvent être connectés à une interface téléphonique. La terminaison d'une interface peut se composer de n'importe quelle combinaison d'appareils, à condition que le total des numéros REN ne dépasse pas 5.

Basé sur les résultats de tests FCC Partie 68, le numéro REN de ce produit est 0.1.

This equipment meets the applicable Industry Canada Terminal Equipment Technical Specifications. This is confirmed by the registration number. The abbreviation IC before the registration number signifies that registration was performed based on a Declaration of Conformity indicating that Industry Canada technical specifications were met. It does not imply that Industry Canada approved the equipment.

Users should ensure for their own protection that the electrical ground connections of the power utility, telephone lines and internal metallic water pipe system, if present, are connected together. This precaution might be particularly important in rural areas.

NOTE: The Ringer Equivalence Number (REN) assigned to each terminal device provides an indication of the maximum number of terminals allowed to be connected to a telephone interface. The termination on an interface might consist of any combination of devices subject only to the requirement that the sum of the Ringer Equivalence Numbers of all the devices does not exceed 5.

The REN for this product is 0.1, based on FCC Part 68 test results.

Notice to users of the German telephone network

Hinweis für Benutzer des deutschen Telefonnetzwerks

Dieses HP-Fax ist nur für den Anschluss eines analogen Public Switched Telephone Network (PSTN) gedacht. Schließen Sie den TAE N-Telefonstecker, der im Lieferumfang des HP All-in-One enthalten ist, an die Wandsteckdose (TAE 6) Code N an. Dieses HP-Fax kann als einzelnes Gerät und/oder in Verbindung (mit seriellem Anschluss) mit anderen zugelassenen Endgeräten verwendet werden.

Australia wired fax statement

In Australia, the HP device must be connected to Telecommunication Network through a line cord which meets the requirements of the Technical Standard AS/ACIF S008.

Declaration of conformity

DECLARATION OF CONFORMITY
according to ISO/IEC 17050-1 and EN 17050-1

DoC #: SNPRC-1701-01- R3 Original/en

Manufacturer's Name:	**HP Inc.**
Manufacturer's Address:	HP Singapore (Private) Limited, 1 Depot Close, Singapore 109841

declare, under its sole responsibility that the product

Product Name and Model:[2]	HP ENVY Photo 7800 All-in-One Printer series
Regulatory Model Number:[1]	SNPRC-1701-01
Product Options:	Please See ANNEX I

conforms to the following Product Specifications and Regulations:

Safety	EMC	Spectrum
IEC 60950-1:2005 +A1:2009 +A2:2013 EN 60950-1:2006 +A11:2009 +A1:2010 +A12:2011 +A2:2013 EN 62479:2010 EN 62311:2008	CISPR 32:2015 /EN55032:2015 Class B CISPR 24:2010 / EN55024 :2010 EN 61000-3-2:2014 EN 61000-3-3:2013 FCC CFR 47 Part 15 Class B ICES-003, Issue 6 Class B VCCI V-3:2015 EN 301 489-1 V2.1.1:2017 EN 301 489-17 V3.1.1:2017	EN 300 328 V2.1.1 : 2016 EN 301 893 V1.8.1 : 2015 EN 301 893 V2.1.0 : 2017

Ecodesign
Regulation (EC) No. 1275/2008
ENERGY STAR® Qualified Imaging Equipment Operational Mode (OM) Test Procedure
EN 50564:2011
IEC 62301:2011

RoHS
EN 50581:2012

Other
FCC Rules and Regulations 47 CFR Part 68/TIA-968-B
ES 203 021-2 / ES 203 021-3

The product herewith complies with the requirements of the Radio Equipment Directive 2014/53/EU, the Ecodesign Directive 2009/125/EC , the RoHS Directive 2011/65/EU and carries the CE-marking accordingly.

This device complies with part 15 of the FCC Rules. Operation is subject to the following two conditions:
(1) This device may not cause harmful interference, and (2) this device must accept any interference received, including interference that may cause undesired operation.

Additional Information:

1) This product is assigned a Regulatory Model Number which stays with the regulatory aspects of the design. The Regulatory Model Number is the main product identifier in the regulatory documentation and test reports, this number should not be confused with the marketing name or the product numbers.
2) The Notified Body **National Technical Systems-Silicon Valley** with number **2155** performed a compliance assessment (according to Annex III, because of missing harmonized standards) and issued the EU-type examination certificate with ID: A104712
3) This product was tested in a typical HP environment, in conjunction with an HP host system.
4) This product uses a radio module with Regulatory Model Number SDGOB-1506 as needed to meet technical regulatory requirements for the countries/regions where this product will be sold.
5) Telecom approvals and standards appropriate for the target countries/regions have been applied to this product, in addition to those listed above.

Vancouver, WA USA
30-05-2017

Uwe Voigt, Manager

Customer Assurance, Inkjet Business and Platform

Local contact for regulatory topics only:

EU:	HP Deutschland GmbH, HP HQ-TRE, 71025 Boeblingen, Germany
U.S.:	HP Inc., 1501 Page Mill Road, Palo Alto 94304, U.S.A. 650-857-1501

http://www.hp.eu/certificates

DECLARATION OF CONFORMITY
according to ISO/IEC 17050-1 and EN 17050-1

ANNEX I

Regulatory Model Number: SNPRC-1701-01

OPTIONS

DESCRIPTION:*	OPTION RMN:*
Radio Module Number (2.4GHz, 5GHz, BLE)	SDGOB-1506
Power Supply (WW, excluding China and India)	F0V63-60012
Product Derivatives Y0G48B,Y0G49B,Y0G49B,Y0G50B,Y0G50B,Y0G51B Y0G52B,Y0G52B,Y0G53B,Y0G54B,Y0G55B,Y0G56B Y0G57B,Y0G58B,Y0G59B,Y0G60B,Y0G61B,Y0G62B Y0G63B,Y0G64B,Y0G65B,Y0G66B,Y0G67B,Y0G68B Y0G69B,Y0G70B	

For non-EU countries only:

DESCRIPTION:*	OPTION RMN:*
Power Supply (China and India)	F0V63-60013

* Where X represents any alpha numeric character.

Regulatory information for wireless products

This section contains the following regulatory information pertaining to wireless products:

- Exposure to radio frequency radiation

- Notice to users in Canada (5 GHz)
- Notice to users in Canada
- Notice to users in Taiwan
- Notice to users in Japan
- Notice to users in Korea
- Notice to users in Serbia (5 GHz)
- Notice to users in Taiwan (5 GHz)
- Notice to user in Thailand (5 GHz)

Exposure to radio frequency radiation

⚠ **CAUTION:** The radiated output power of this device is far below the FCC radio frequency exposure limits. Nevertheless, the device shall be used in such a manner that the potential for human contact during normal operation is minimized. This product and any attached external antenna, if supported, shall be placed in such a manner to minimize the potential for human contact during normal operation. In order to avoid the possibility of exceeding the FCC radio frequency exposure limits, human proximity to the antenna shall not be less than 20 cm (8 inches) during normal operation.

Notice to users in Canada (5 GHz)

⚠ **CAUTION:** When using IEEE 802.11a wireless LAN, this product is restricted to indoor use, due to its operation in the 5.15- to 5.25-GHz frequency range. The Industry Canada requires this product to be used indoors for the frequency range of 5.15 GHz to 5.25 GHz to reduce the potential for harmful interference to co-channel mobile satellite systems. High-power radar is allocated as the primary user of the 5.25- to 5.35-GHz and 5.65- to 5.85-GHz bands. These radar stations can cause interference with and/or damage to this device.

Lors de l'utilisation du réseau local sans fil IEEE 802.11a, ce produit se limite à une utilisation en intérieur à cause de son fonctionnement sur la plage de fréquences de 5,15 à 5,25 GHz. Industrie Canada stipule que ce produit doit être utilisé en intérieur dans la plage de fréquences de 5,15 à 5,25 GHz afin de réduire le risque d'interférences éventuellement dangereuses avec les systèmes mobiles par satellite via un canal adjacent. Le radar à haute puissance est alloué pour une utilisation principale dans une plage de fréquences de 5,25 à 5,35 GHz et de 5,65 à 5,85 GHz. Ces stations radar peuvent provoquer des interférences avec cet appareil et l'endommager.

Notice to users in Canada

Under Industry Canada regulations, this radio transmitter may only operate using an antenna of a type and maximum (or lesser) gain approved for the transmitter by Industry Canada. To reduce potential radio interference to other users, the antenna type and its gain should be so chosen that the equivalent isotropically radiated power (e.i.r.p.) is not more than that necessary for successful communication.

This device complies with Industry Canada licence-exempt RSS standard(s). Operation is subject to the following two conditions: (1) this device may not cause interference, and (2) this device must accept any interference, including interference that may cause undesired operation of the device.

WARNING! Exposure to Radio Frequency Radiation The radiated output power of this device is below the Industry Canada radio frequency exposure limits. Nevertheless, the device should be used in such a manner that the potential for human contact is minimized during normal operation.

To avoid the possibility of exceeding the Industry Canada radio frequency exposure limits, human proximity to the antennas should not be less than 20 cm (8 inches).

Conformément au Règlement d'Industrie Canada, cet émetteur radioélectrique ne peut fonctionner qu'avec une antenne d'un type et d'un gain maximum (ou moindre) approuvé par Industrie Canada. Afin de réduire le brouillage radioélectrique potentiel pour d'autres utilisateurs, le type d'antenne et son gain doivent être choisis de manière à ce que la puissance isotrope rayonnée équivalente (p.i.r.e.) ne dépasse pas celle nécessaire à une communication réussie.

Cet appareil est conforme aux normes RSS exemptes de licence d'Industrie Canada. Son fonctionnement dépend des deux conditions suivantes : (1) cet appareil ne doit pas provoquer d'interférences nuisibles et (2) doit accepter toutes les interférences reçues, y compris des interférences pouvant provoquer un fonctionnement non souhaité de l'appareil.

AVERTISSEMENT relatif à l'exposition aux radiofréquences. La puissance de rayonnement de cet appareil se trouve sous les limites d'exposition de radiofréquences d'Industrie Canada. Néanmoins, cet appareil doit être utilisé de telle sorte qu'il doive être mis en contact le moins possible avec le corps humain.

Afin d'éviter le dépassement éventuel des limites d'exposition aux radiofréquences d'Industrie Canada, il est recommandé de maintenir une distance de plus de 20 cm entre les antennes et l'utilisateur.

Notice to users in Taiwan

低功率電波輻射性電機管理辦法

第十二條

經型式認證合格之低功率射頻電機，非經許可，公司、商號或使用者均不得擅自變更頻率、加大功率或變更設計之特性及功能。

第十四條

低功率射頻電機之使用不得影響飛航安全及干擾合法通信；經發現有干擾現象時，應立即停用，並改善至無干擾時方得繼續使用。

前項合法通信，指依電信法規定作業之無線電通信。低功率射頻電機須忍受合法通信或工業、科學及醫藥用電波輻射性電機設備之干擾。

Notice to users in Japan

この機器は技術基準適合証明又は工事設計認証を受けた無線設備を搭載しています。

Notice to users in Korea

해당 무선설비는 전파혼신 가능성이 있으므로 인명안전과 관련된 서비스는 할 수 없음

(무선 모듈이 탑재된 제품인 경우)

Notice to users in Serbia (5 GHz)

Upotreba ovog uredjaja je ogranicna na zatvorene prostore u slucajevima koriscenja na frekvencijama od 5150-5350 MHz.

Notice to users in Taiwan (5 GHz)

在 5.25-5.35 秭赫頻帶內操作之無線資訊傳輸設備，限於室內使用。

Notice to user in Thailand (5 GHz)

เครื่องวิทยุคมนาคมนี้มีระดับการแผ่คลื่นแม่เหล็กไฟฟ้าสอดคล้องตามมาตรฐานความปลอดภัยต่อสุขภาพของมนุษย์จากการใช้เครื่องวิทยุคมนาคมที่คณะกรรมการกิจการโทรคมนาคมแห่งชาติประกาศกำหนด
This radio communication equipment has the electromagnetic field strength in compliance with the Safety Standard for the Use of Radio Communication Equipment on Human Health announced by the National Telecommunications Commission.

Environmental product stewardship program

HP is committed to providing quality products in an environmentally sound manner. Design for recycling has been incorporated into this product. The number of materials has been kept to a minimum while ensuring proper functionality and reliability. Dissimilar materials have been designed to separate easily. Fasteners and other connections are easy to locate, access, and remove using common tools. High priority parts have been designed to access quickly for efficient disassembly and repair. For more information, visit HP's Commitment to the Environment website at:

www.hp.com/hpinfo/globalcitizenship/environment

- Eco-Tips
- European Union Commission Regulation 1275/2008
- Paper
- Plastics
- Safety data sheets
- Recycling program
- HP inkjet supplies recycling program
- Power consumption
- Disposal of waste equipment by users
- Chemical substances
- Declaration of the Presence Condition of the Restricted Substances Marking (Taiwan)
- EPEAT
- Battery disposal in Taiwan
- European Union Battery Directive
- California Perchlorate Material Notice
- The Table of Hazardous Substances/Elements and their Content (China)
- SEPA Ecolabel User Information (China)
- China Energy Label for Printer, Fax and Copier

Eco-Tips

HP is committed to helping customers reduce their environmental footprint. Please visit the HP Environmental Programs and Initiatives website for more information on HP's environmental initiatives.

www.hp.com/hpinfo/globalcitizenship/environment/

European Union Commission Regulation 1275/2008

For product power data, including the power consumption of the product in networked standby if all wired network ports are connected and all wireless network ports are activated, please refer to section P14

'Additional Information' of the product IT ECO Declaration at www.hp.com/hpinfo/globalcitizenship/environment/productdata/itecodesktop-pc.html.

Paper

This product is suited for the use of recycled paper according to DIN 19309 and EN 12281:2002.

Plastics

Plastic parts over 25 grams are marked according to international standards that enhance the ability to identify plastics for recycling purposes at the end of product life.

Safety data sheets

Safety Data Sheets, product safety and environmental information are available at www.hp.com/go/ecodata or on request.

Recycling program

HP offers an increasing number of product return and recycling programs in many countries/regions, and partners with some of the largest electronic recycling centers throughout the world. HP conserves resources by reselling some of its most popular products. For more information regarding recycling of HP products, please visit:

www.hp.com/recycle

HP inkjet supplies recycling program

HP is committed to protecting the environment. The HP Inkjet Supplies Recycling Program is available in many countries/regions, and lets you recycle used print cartridges and ink cartridges free of charge. For more information, go to the following website:

www.hp.com/hpinfo/globalcitizenship/environment/recycle/

Power consumption

HP printing and imaging equipment marked with the ENERGY STAR® logo is certified by the U.S. Environmental Protection Agency. The following mark will appear on ENERGY STAR certified imaging products:



Additional ENERGY STAR certified imaging product model information is listed at: www.hp.com/go/energystar

Disposal of waste equipment by users



This symbol means do not dispose of your product with your other household waste. Instead, you should protect human health and the environment by handing over your waste equipment to a designated collection point for the recycling of waste electrical and electronic equipment. For more information, please contact your household waste disposal service, or go to http://www.hp.com/recycle.

Chemical substances

HP is committed to providing our customers with information about the chemical substances in our products as needed to comply with legal requirements such as REACH *(Regulation EC No 1907/2006 of the European Parliament and the Council)*. A chemical information report for this product can be found at: www.hp.com/go/reach.

Declaration of the Presence Condition of the Restricted Substances Marking (Taiwan)

限用物質含有情況標示聲明書

Declaration of the Presence Condition of the Restricted Substances Marking

單元 Unit	限用物質及其化學符號 Restricted substances and its chemical symbols					
	鉛 Lead (Pb)	汞 Mercury (Hg)	鎘 Cadmium (Cd)	六價鉻 Hexavalent chromium (Cr^{+6})	多溴聯苯 Polybrominated biphenyls (PBB)	多溴二苯醚 Polybrominated diphenyl ethers (PBDE)
外殼和紙匣 (External Casings and Trays)	0	0	0	0	0	0
電線 (Cables)	0	0	0	0	0	0
印刷電路板 (Printed Circuit Boards)	—	0	0	0	0	0
列印引擎(Print Engine)	—	0	0	0	0	0
列印機組件 (Print Assembly)	—	0	0	0	0	0
噴墨印表機墨水匣 (Print Supplies)	0	0	0	0	0	0
列印機配件 (Print Accessory)	—	0	0	0	0	0

備考 1.〝超出 0.1 wt %〞及〝超出 0.01 wt %〞係指限用物質之百分比含量超出百分比含量基準值。

Note 1: “Exceeding 0.1 wt %” and “exceeding 0.01 wt %” indicate that the percentage content of the restricted substance exceeds the reference percentage value of presence condition.

備考 2.〝0〞係指該項限用物質之百分比含量未超出百分比含量基準值。

Note 2: “0” indicates that the percentage content of the restricted substance does not exceed the percentage of reference value of presence.

備考 3.〝—〞係指該項限用物質為排除項目。

Note 3: The “–” indicates that the restricted substance corresponds to the exemption.

若要存取產品的最新使用指南或手冊，請前往 www.support.hp.com。選取**搜尋您的產品**，然後依照 畫面上的指示繼續執行。

To access the latest user guides or manuals for your product, go to www.support.hp.com. Select **Find your product**, and then follow the onscreen instructions.

EPEAT

Most HP products are designed to meet EPEAT. EPEAT is a comprehensive environmental rating that helps identify greener electronics equipment. For more information on EPEAT go to www.epeat.net. For information

on HP's EPEAT registered products go to www.hp.com/hpinfo/globalcitizenship/environment/pdf/epeat_printers.pdf.

Battery disposal in Taiwan



European Union Battery Directive



This product contains a battery that is used to maintain data integrity of real time clock or product settings and is designed to last the life of the product. Any attempt to service or replace this battery should be performed by a qualified service technician.

California Perchlorate Material Notice

Perchlorate material - special handling may apply. See: www.dtsc.ca.gov/hazardouswaste/perchlorate

This product's real-time clock battery or coin cell battery may contain perchlorate and may require special handling when recycled or disposed of in California.

The Table of Hazardous Substances/Elements and their Content (China)

产品中有害物质或元素的名称及含量

根据中国《电器电子产品有害物质限制使用管理办法》 

部件名称	有害物质					
	铅 (Pb)	汞 (Hg)	镉 (Cd)	六价铬 (Cr(VI))	多溴联苯 (PBB)	多溴二苯醚 (PBDE)
外壳和托盘	0	0	0	0	0	0
电线	0	0	0	0	0	0
印刷电路板	X	0	0	0	0	0
打印系统	X	0	0	0	0	0
显示器	X	0	0	0	0	0
喷墨打印机墨盒	0	0	0	0	0	0
驱动光盘	X	0	0	0	0	0
扫描仪	X	0	0	0	0	0
网络配件	X	0	0	0	0	0
电池板	X	0	0	0	0	0
自动双面打印系统	0	0	0	0	0	0
外部电源	X	0	0	0	0	0

本表格依据 SJ/T 11364 的规定编制。

0：表示该有害物质在该部件所有均质材料中的含量均在 GB/T 26572 规定的限量要求以下。

X：表示该有害物质至少在该部件的某一均质材料中的含量超出 GB/T 26572 规定的限量要求。

此表中所有名称中含 “X” 的部件均符合欧盟 RoHS 立法。

注：环保使用期限的参考标识取决于产品正常工作的温度和湿度等条件。

SEPA Ecolabel User Information (China)

中国环境标识认证产品用户说明

噪声大于 63.0 dB(A) 的办公设备不宜放置于办公室内，请在独立的隔离区域使用。

如需长时间使用本产品或打印大量文件，请确保在通风良好的房间内使用。

如您需要确认本产品处于零能耗状态，请按下电源关闭按钮，并将插头从电源插座断开。

您可以使用再生纸，以减少资源耗费。

China Energy Label for Printer, Fax and Copier

复印机、打印机和传真机能源效率标识实施规则

依据“复印机、打印机和传真机能源效率标识实施规则”，该打印机具有中国能效标识。标识上显示的能效等级和操作模式值根据“复印机、打印机和传真机能效限定值及能效等级”标准（“GB 21521”）来确定和计算。

1. 能效等级

   产品能效等级分 3 级，其中 1 级能效最高。能效限定值根据产品类型和打印速度由标准确定。能效等级则根据基本功耗水平以及网络接口和内存等附加组件和功能的功率因子之和来计算。

2. 能效信息

   喷墨打印机

   - 操作模式功率

     睡眠状态的能耗按照 GB 21521 的标准来衡量和计算。该数据以瓦特 (W) 表示。

   - 待机功率

     待机状态是产品连接到电网电源上功率最低的状态。该状态可以延续无限长时间，且使用者无法改变此状态下产品的功率。对于“成像设备”产品，“待机”状态通常相当于“关闭”状态，但也可能相当于“准备”状态或者“睡眠”状态。该数据以瓦特 (W) 表示。

   - 睡眠状态预设延迟时间

     出厂前由制造商设置的时间决定了该产品在完成主功能后进入低耗模式（例如睡眠、自动关机）的时间。该数据以分钟表示。

   - 附加功能功率因子之和

     网络接口和内存等附加功能的功率因子之和。该数据以瓦特 (W) 表示。

标识上显示的能耗数据是根据典型配置测量得出的数据，此类配置包含登记备案的打印机依据复印机、打印机和传真机能源效率标识实施规则所选的所有配置。因此，该特定产品型号的实际能耗可能与标识上显示的数据有所不同。

要了解规范的更多详情，请参考最新版的 GB 21521 标准。

Index

A

accessibility 3
ADSL, fax setup with
  parallel phone systems 78
answer ring pattern
  change 66
  parallel phone systems 80
answering machine
  fax tones recorded 155
  set up with fax (parallel phone systems) 88
  set up with fax and modem 89
automatic fax reduction 61

B

backup fax 59
baud rate 67
black and white pages
  fax 53
blocked fax numbers
  set up 61
both sides, print on 34
broadcast faxing
  send 57
buttons, control panel 10

C

carriage
  clear carriage jams 133
cartridge access door, locating 9
cartridges 9, 108
  check ink levels 105
  locating 9
  part numbers 108
  replace 106
  tips 104
clean
  document feeder 165
  exterior 165
  scanner glass 164
clear
  fax logs 73
colored text, and OCR 47
computer modem
  shared with fax (parallel phone systems) 83
  shared with fax and answering machine (parallel phone systems) 89
  shared with fax and voice line (parallel phone systems) 85
  shared with fax and voice mail (parallel phone systems) 93
confirmation reports, fax 71
connectors, locating 9
control panel
  buttons 10
  features 10
  lights 10
  status icons 10
copy
  specifications 174
correct port test, fax 149
customer support
  warranty 170

D

diagnostic page 162
dial tone test, failure 151
dial type, setting 67
dial-up modem
  shared with fax (parallel phone systems) 83
  shared with fax and answering machine (parallel phone systems) 89
  shared with fax and voice line (parallel phone systems) 85
  shared with fax and voice mail (parallel phone systems) 93
distinctive ringing
  change 66
  parallel phone systems 80
document feeder
  clean 165
  feeding problems, troubleshoot 165
double-sided printing 34
DSL, fax setup with
  parallel phone systems 78

E

ECM. *See* error correction mode
edit
  text in OCR program 47
embedded web server
  about 126
  opening 126
  troubleshoot, cannot be opened 127
  Webscan 51
environment
  Environmental product stewardship program 184
  environmental specifications 173
error correction mode 57
error reports, fax 72
EWS. *See* embedded web server

F

fax
  answer mode 65

answering machine and modem, shared with (parallel phone systems) 89
answering machine troubleshoot 155
answering machine, set up (parallel phone systems) 88
auto answer 65
backup fax 59
blocking numbers 61
confirmation reports 71
dial tone test, failed 151
dial type, setting 67
distinctive ringing setup (parallel phone systems) 80
distinctive ringing, change pattern 66
DSL, set up (parallel phone systems) 78
error correction mode 57
error reports 72
forwarding 61
header 65
Internet Protocol, over 70
ISDN line, set up (parallel phone systems) 79
line condition test, failed 151
log, clear 73
log, print 72
manual receive 59
modem and answering machine, shared with (parallel phone systems) 89
modem and voice line, shared with (parallel phone systems) 85
modem and voice mail, shared with (parallel phone systems) 93
modem, shared with (parallel phone systems) 83
monitor dialing 56, 57
parallel phone systems 75
PBX system, set up (parallel phone systems) 79
phone cord connection test, failed 149
phone cord type test, failed 150
print last transaction details 73
receive 59
receive, troubleshoot 153, 154
redial options 67
reduction 61
reports 71
reprint 60
rings to answer 66
send 54
send, troubleshoot 153, 155
separate line setup (parallel phone systems) 78
settings, change 65
setup types 76
shared phone line setup (parallel phone systems) 81
sound volume 68
speed 67
test failed 148
test setup 94
troubleshoot 148
voice mail, set up (parallel phone systems) 82
wall jack test, failed 149
Fax screen 11
FoIP 70
forwarding faxes 61

G
glass, scanner
clean 164
locating 8

H
hardware, fax setup test 148
header, fax 65
Help button 11
HP Utility (OS X and macOS)
opening 125

I
ink levels, check 105
Internet Protocol
fax, using 70
IP address
checking for printer 127
IP settings 117
ISDN line, set up with fax
parallel phone systems 79

J
jams
clear 130
paper to avoid 15
junk fax mode 61

L
lights, control panel 10
line condition test, fax 151
link speed, setting 117
log, fax
print 72

M
maintenance
check ink levels 105
clean 165
diagnostic page 162
replace cartridges 106
manual faxing
receive 59
send 55, 56
media
duplexing 34
memory
reprint faxes 60
save faxes 59
modem
shared with fax (parallel phone systems) 83
shared with fax and answering machine (parallel phone systems) 89
shared with fax and voice line (parallel phone systems) 85
shared with fax and voice mail (parallel phone systems) 93
monitor dialing 56, 57
multi-feeds, troubleshoot 134

N
networks
connector illustration 9
IP settings 117
link speed 117
settings, change 117
view and print settings 117
wireless communication setup 113
wireless settings 162

O

OCR
- edit scanned documents 47

OS X and macOS
- HP Utility 125

output tray
- locating 8

P

paper
- clear jams 130
- HP, order 14
- selecting 14
- skewed pages 134
- troubleshoot feeding 134

paper-feed problems, troubleshoot 134

parallel phone systems
- answering machine setup 88
- countries/regions with 75
- distinctive ringing setup 80
- DSL setup 78
- ISDN setup 79
- modem and answering machine setup 89
- modem and voice mail setup 93
- modem setup 83
- modem shared with voice line setup 85
- PBX setup 79
- separate line setup 78
- setup types 76
- shared line setup 81

PBX system, set up with fax
- parallel phone systems 79

phone book
- change contact 63
- change group contacts 63
- delete contacts 64
- send fax 54
- set up 63
- set up group contacts 63

phone cord
- connected to correct port test failed 149
- correct type test failed 150

phone line, answer ring pattern 66

phone, fax from
- receive 59
- send, 55

power
- troubleshoot 159

power input, locating 9

print
- diagnostic page 162
- double-sided 34
- fax logs 72
- fax reports 71
- faxes 60
- last fax details 73
- specifications 173
- troubleshoot 159

print quality report 162

printer control panel
- locating 8
- network settings 117
- send faxes 54

printer software (Windows)
- about 124
- opening 24, 124

printer status report
- information on 162

pulse dialing 67

R

radio interference
- regulatory information 181

rear access panel
- illustration 9

receive faxes
- auto answer mode 65
- automatically 59
- blocking numbers 61
- forwarding 61
- manually 59
- rings to answer 66
- troubleshoot 153, 154

recycle
- ink cartridges 185

redial options, setting 67

reduce fax 61

regulatory information 181

regulatory notices 175
- regulatory model identification number 175

replace cartridges 106

reports
- confirmation, fax 71
- diagnostic 162
- error, fax 72
- fax test failed 148
- web access 162

reprint
- faxes from memory 60

rings to answer 66

S

save
- faxes in memory 59

scan
- from Webscan 51
- OCR 47
- scan specifications 173

scanner glass
- clean 164
- locating 8

send faxes
- basic fax 54
- from a phone 55
- memory, from 56
- monitor dialing 56, 57
- troubleshoot 153, 155

send scans
- for OCR 47

serial phone systems
- countries/regions with 75
- setup types 76

settings
- network 117
- speed, fax 67
- volume, fax 68

setup
- answering machine (parallel phone systems) 88
- answering machine and modem (parallel phone systems) 89
- computer modem (parallel phone systems) 83
- computer modem and answering machine (parallel phone systems) 89
- computer modem and voice line (parallel phone systems) 85
- computer modem and voice mail (parallel phone systems) 93
- distinctive ringing 66
- distinctive ringing (parallel phone systems) 80
- DSL (parallel phone systems) 78
- fax scenarios 76

fax, with parallel phone systems 75
ISDN line (parallel phone systems) 79
PBX system (parallel phone systems) 79
separate fax line (parallel phone systems) 78
shared phone line (parallel phone systems) 81
test fax 94
voice mail (parallel phone systems) 82
voice mail and computer modem (parallel phone systems) 93
skew, troubleshoot
print 134
software
OCR 47
scan 45
Webscan 51
status
network configuration report 162
status icons 10
subscriber identification code 65
system requirements 173

T
technical information
copy specifications 174
environmental specifications 173
print specifications 173
scan specifications 173
system requirements 173
telephone line, answer ring pattern 66
telephone wall jack, fax 149
telephone, fax from
receive 59
send 55
tests, fax
dial tone, failed 151
failed 148
fax line condition 151
fax phone cord type test failed 150
hardware, failed 148
port connection, failed 149
setup 94
telephone wall jack 149
tone dialing 67
trays
clear paper jams 130
locating 8
paper-width guides illustration 8
troubleshoot feeding 134
troubleshoot
answering machines 155
control panel help system 160
embedded web server 127
fax 148
fax dial tone test failed 151
fax hardware test failed 148
fax line test failed 151
fax phone cord connection test failed 149
fax phone cord type test failed 150
fax tests 148
fax wall jack test, failed 149
HP Smart 161
multiple pages are picked 134
network configuration page 162
paper not picked up from tray 134
paper-feed problems 134
power 159
print 159
printer status report 162
receive faxes 153, 154
send faxes 153, 155
skewed pages 134
two-sided printing 34

U
USB connection
port, locating 8, 9

V
view
network settings 117
voice mail
set up with fax (parallel phone systems) 82
set up with fax and computer modem (parallel phone systems) 93
volume
fax sounds 68

W
wall jack test, fax 149
warranty 170
Web Services information page 162
Webscan 51
websites
accessibility information 3
wireless communication
regulatory information 181
set up 113