Model No. AF4000 /AF4001

Owner's Manual

POWERTEC®

Air Filtration System

QUESTION...
1•847•780•6120

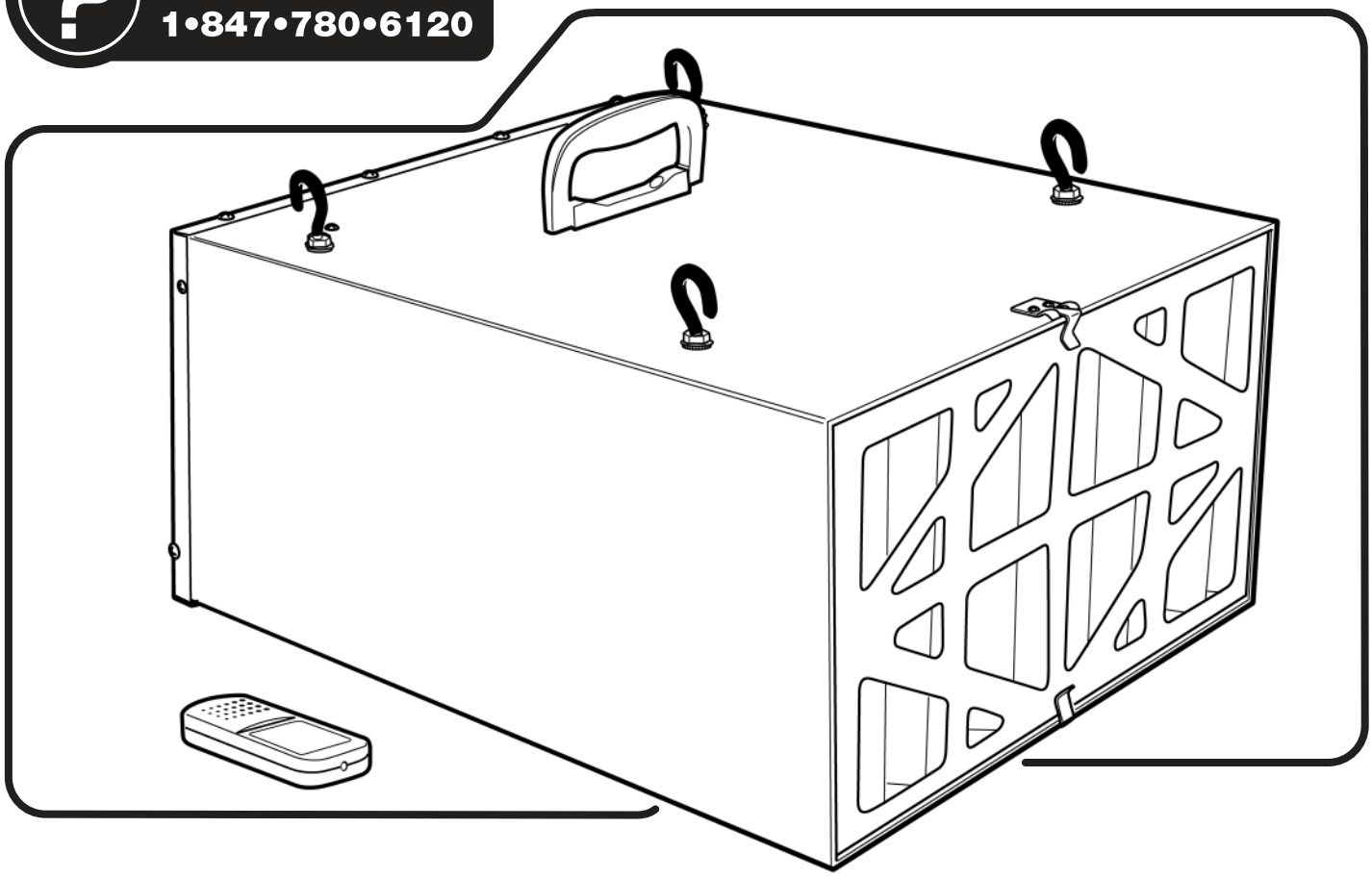

Visit us on the web at **www.powertecproducts.com**

You will need this manual for safety instructions, operating procedures, and warranty.
Put it and the original sales invoice in a safe, dry place for future reference.

24-0412

TABLE OF CONTENTS

SECTION PAGE



SAFETY RULES / WARNINGS 3-4



CONTENTS 4

Unpacking Contents



ASSEMBLY 5

Installation



OPERATION 6-8

Power Source
Grounding Instructions
Extension Cords
System Operation
ON/SPEED Control
Filtration Timing
To Turn the Unit OFF



MAINTENANCE 8-9

Changing the Filters
Fuse Replacement
Remote Control Batter Replacement
General Maintenance



TROUBLESHOOTING 9



PARTS ILLUSTRATION & LIST 10-11



WARRANTY 12

PRODUCT SPECIFICATIONS

Horsepower (Maximum Developed) . . . . . .1/6 HP
Voltage . . . . . .120 V
Hertz . . . . . 60 Hz
Controls . . . . . Manual or Remote Control
Number of Speeds. 3
Air Flow (CFM) 300/350/400
Outer Filter . . . . . 5 Micron
Inner Filter. . . . . 1 Micron
Filtration Timing. . . . . .Auto Off, 1 HR, 2 HR, 4HR
Impeller . . . . . Squirrel Cage
Sound Rating @ 3 Feet . . . . . .High Speed 69dB
. . . . . .Medium Speed 67dB
. . . . . Low Speed 62dB

MOTOR SPECIFICATIONS

This air filtration system is supplied with a 1/6 HP motor installed. The 120 Volt AC universal motor has the following specifications:

Horsepower (Maximum Developed) . . . . . .1/6 HP
Voltage 120
Amps. 1
Hertz 60

SAFETY RULES

⚠WARNING

For your own safety, read and understand all warnings and operating instructions before using any tool or equipment.

⚠WARNING

Some dust created by power sanding, sawing, grinding, drilling and other construction activities can expose you to chemicals known to the State of California to cause cancer, birth defects or other reproductive harm.

Some examples of these chemicals are:

- Lead from lead-based paints.
- Crystalline silica from bricks and cement and other masonry products.
- Arsenic and chromium from chemically-treated lumber.

Your risk from these exposures varies, depending on how often you do this type of work. To reduce your exposure to these chemicals: work in a well ventilated area and work with approved safety equipment. Always wear OSHA/NIOSH approved, properly fitting face mask or respirator when using such tools.

⚠WARNING

Failure to follow these rules may result in serious personal injury. Remember that being careless for even a fraction of a second can result in severe personal injury.

WORK PREPARATION

- Wear proper apparel. Do not wear loose clothing, gloves, neckties, rings, bracelets or other jewelry which may get caught in moving parts of the tool.
- Wear protective hair covering to contain long hair.
- Wear safety shoes with non-slip soles.
- Wear safety glasses complying with United States ANSI Z87.1. Everyday glasses have only impact resistant lenses. They are NOT safety glasses.
- Wear face mask or dust mask if operation is dusty.
- Be alert and think clearly. Never operate power tools when tired, intoxicated or when taking medications that cause drowsiness.

WORK AREA PREPARATION

- Keep work area clean. Cluttered work areas invite accidents.
- Do not use power tools in dangerous environments. Do not use power tools in damp or wet locations. Do not expose power tools to rain.
- Work area should be properly lit.
- Proper electrical receptacle should be available for tool. Three-prong plug should be plugged directly into properly grounded, three-prong receptacle.
- Extension cords should have a grounding prong and the three wires of the extension cord should be of the correct gauge.
- Keep visitors at a safe distance from work area.
- Keep children out of the work area. Ensure your work shop is child-proof. Use padlocks, master switches or remove switch keys to prevent any unintentional use of power tools.

TOOL MAINTENANCE

- Always unplug tool prior to inspection.
- Consult manual for specific maintaining and adjusting procedures.
- Keep tool lubricated and clean for a safe operation.
- Remove adjusting tools. Form habit of checking to see adjusting tools or accessories are removed before switching tool on.
- Keep all parts in working order. Check to determine that guard or other parts will operate properly and perform their intended function.
- Check for damaged parts. Check for alignment of moving parts, binding, breakage, mounting and any other condition that may affect tool's operation.
- A guard or any other part that is damaged should be properly repaired or replaced. Do not perform makeshift repairs.

TOOL OPERATION

- Avoid accidental start-up. Make sure that the tool is in the "OFF" position before plugging in.
- Use the right tool for your job. Do not force your tool or attachment to do a job for which it was not designed.
- Disconnect tool when changing parts.
- Don't force the workpiece on the machine. Damage to the machine and/or injury may result.
- Never leave tool running unattended. Turn the power off and do not leave tool until it comes to a complete stop.
- Do not overreach. Loss of balance can make you fall into a working machine, causing injury.
- Never stand on tool. Injury could occur if the tool tips, or if you accidentally contact the cutting tool.
- Know your tool. Learn the tool's operation, application and specific limitations before using it.
- Use a proper extension cord of the correct gauge. The extension cord should have a grounding prong, and should be in good condition.
- Handle workpiece correctly. Keep hands away from moving parts.
- Turn tool off if it jams.
- Always feed workpiece against the direction of the sanding rotation. To maintain control, properly support long or wide work-pieces.

⚠CAUTION

Think safety! Safety is a combination of operator common sense and alertness at all times when tool is being used.

⚠WARNING

Do not attempt to operate tool until it is completely assembled according to the instructions.

SAVE ALL WARNINGS AND INSTRUCTIONS FOR FUTURE REFERENCE

SPECIFIC SAFETY INSTRUCTIONS

⚠ WARNING

Read and understand the instruction manual before operating the Air Filtration System. To reduce the risk of injury, electrical shock or fire, basic precautions listed below should always be followed when using this Air Filtration System.

- Always disconnect machine from power source before servicing, cleaning, changing filters or when not in use.
- Do not plug in Air Filtration System unless switch is in the “OFF” position.
- Keep hands away from all moving parts.
- Wear eye protection or face shield during operation.
- Make sure all mobile parts move freely and are free from interference.
- Make sure machine is firmly secured in a horizontal position when hanging from ceiling or positioned on work surface.
- If ceiling mounted, bottom of air filtration system must be at least 7 feet above the floor.
- If ceiling mounted, mounts must be anchored to building structure which will support a minimum of at least 100 pounds. Never mount to surfaces such as dry wall or false ceiling grinds, etc.

⚠ WARNING

Risk of combustion. To avoid a potentially dangerous situation, do not use this machine to filter flammable vapors or smoke. **This air filtration system is designed and intended for the filtration of airborne wood dust only.** It is neither designed nor intended for any other purpose whatsoever.

Do not use for filtering toxic carcinogenic or other hazardous materials or other health endangering materials.

- To reduce the risk of electrical shock, do not expose Air Filtration System to water or rain.
- Never duct a machine directly into the air filtration system.
- Do not use air filtration system without filters in place.
- **Use the machine for filtering wood dust only.**
- Not for use filtering sheet rock dust, silica, lead paint dust, asbestos, biohazards, smoke, toxic fumes, spray paint or flammable liquids.
- Failure to follow these rules may result in serious personal injury/or property damage.

IMPORTANT: *Always consider safety first as it applies to your individual working conditions, the environment in every shop is different.*

CONTENTS

UNPACKING

The Air Filtration System is shipped mainly assembled. Some minimal assembly is required during installation.

Examine carton for shipping damage. Check immediately whether all parts and accessories are included. If anything is missing or broken, contact your retailer or call **847-780-6120.**

NOTE: *Carefully remove all contents from shipping carton. The shipping carton contains:*

ITEM	DESCRIPTION	QTY
A	Air Filtration Unit	1
B	Remote Control (Two AA Batteries Required, Not Included)	1
C	Flange Nuts	4
D	Eye Bolts	4
E	Mounting Screw Hooks	4
F	Hook Chains	4
	Owner's Manual (not shown)	1

Figure 1

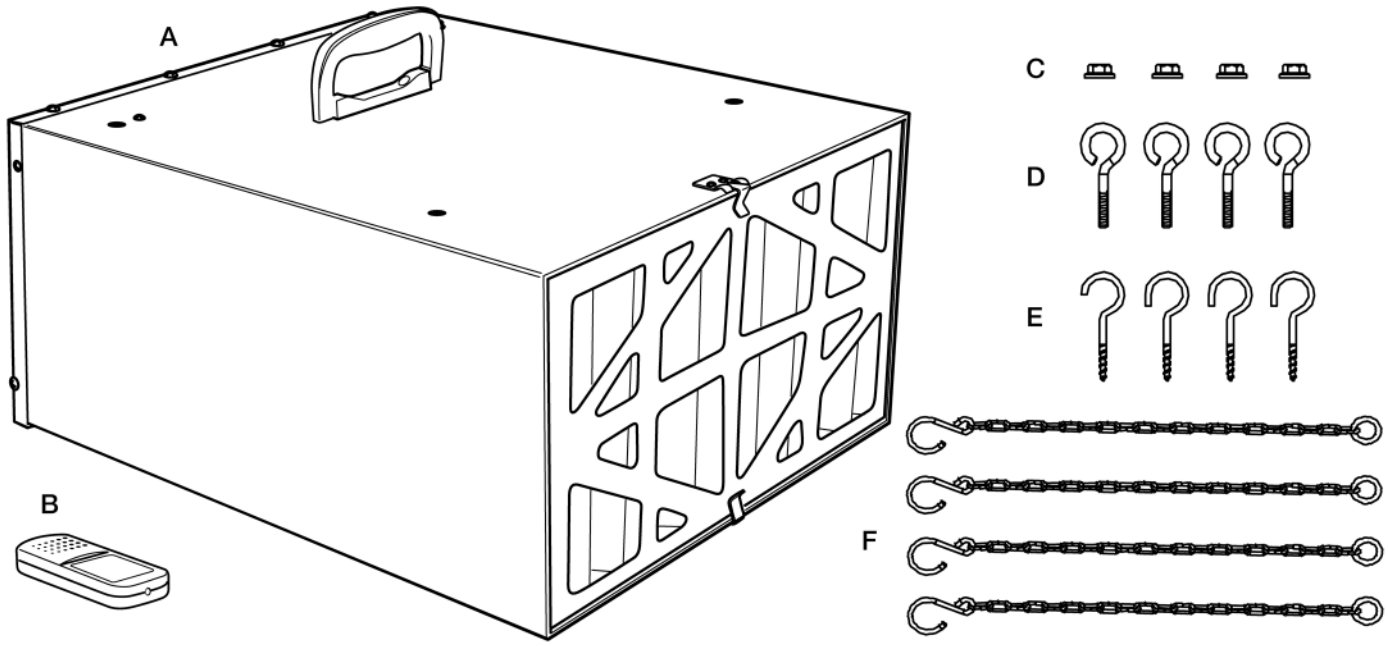

INSTALLATION

Refer to Figures 1 to 4

This air filtration system is specifically designed to circulate and filter non-metallic dust, which is generated throughout the work area. The unit can be located on a work bench or hung from an overhead support. When selecting a location ensure the power source is easy to access. Use the carry handle when moving the unit.

IMPORTANT*: When determining a location for the air filtration system, always select a location where the air flow is unrestricted. Locate the unit away from corners and any heating or cooling vents.*

Work Bench Location

- Place the air filtration system onto a work bench, ensure the air flow is not restricted and the unit is away from corners and any heating or cooling vents.

⚠CAUTION

Clamp the air filtration system in place if using on sawhorses or a workbench.

- Plug the power cord into the correct receptacle. (Refer to **Power Source** paragraph in this section of the manual.)

Hanging Mount

Tools required for assembly:

No. 2 Phillips screwdriver (not supplied)

10 mm wrench (not supplied)

NOTE: *Hang the unit at least 7 Feet above floor level and away from corners and any heating or cooling vents.*

- See Figure 2. Remove four bolts from the cabinet top. Store for future use if needed.
- See Figure 3. Thread Flange Nuts (C) onto Eye Bolts (D) until reaching the top of the threads.
- Thread Eye Bolt assembly into hole where bolt was removed from cabinet top. Secure Eye Bolt when tightening Flange Nut to prevent spinning. Tighten Flange Nut against cabinet top.
- Repeat for remaining three Eye Bolts.
- See Figure 4. Anchor four Mounting Screw Hooks (E) into the building's ceiling joist. Never mount to surface such as dry wall or false ceiling grids, etc.

⚠CAUTION

Mounting hooks must be anchored to a building structure which can support a minimum of 100 pounds. Never mount to surface such as dry wall or false ceiling grids, etc.

- Place a hook chain on each mounting screw (Figure 4).
- Attach each eye bolt to the hook chain (Figure 4).
- Ensure the unit is level horizontally. Adjust if needed.
- Plug the power cord into the correct receptacle. (Refer to **Power Source** paragraph in this section of the manual.)

Figure 2

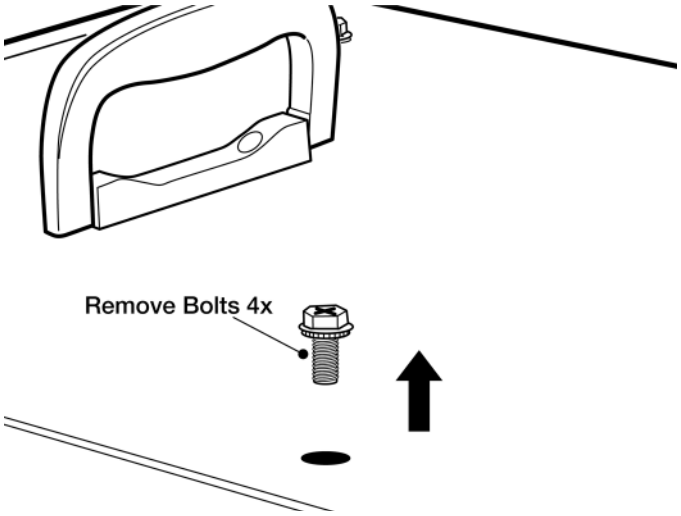

Figure 3

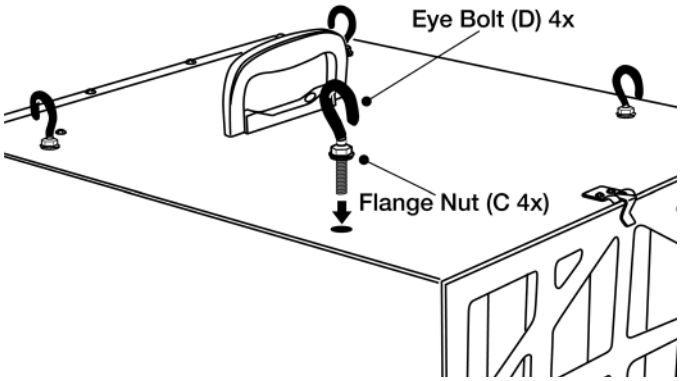

Figure 4

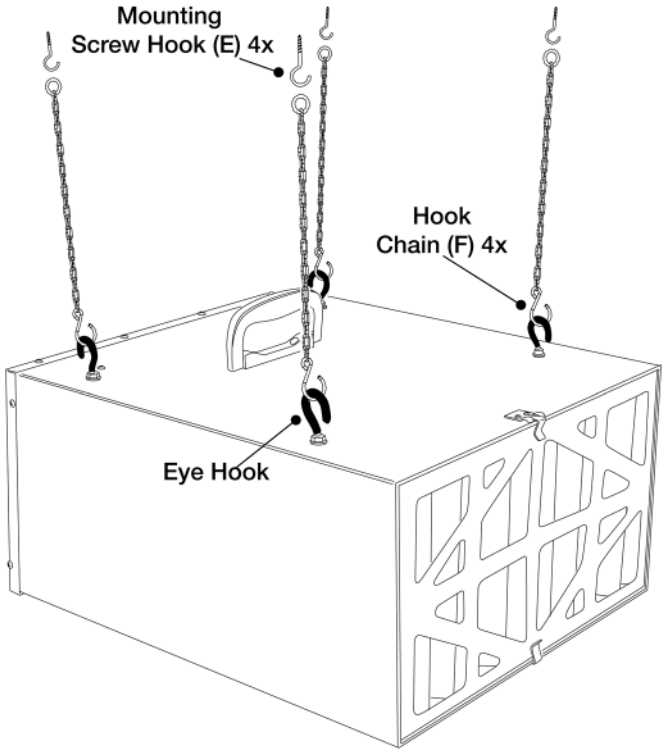

POWER SOURCE

⚠WARNING

DO NOT connect Air Filtration System to a power source until it is completely assembled and you have read and understood the entire operating manual.

The Air Filtration System is wired for 120 Volts, 60 Hz alternating current. Before connecting the Air Filtration System to the power source, ensure the unit is powered **OFF**.

Running the unit on voltages which are not within range may cause overheating and motor burn-out. Heavy loads require that voltage at motor terminals be no less than the voltage specified on nameplate.

GROUND CONNECTION INSTRUCTIONS

⚠WARNING

Risk of electrical shock. All tools must be connected to ground. Improper connection of equipment grounding conductor can risk electrical shock.

- The Air Filtration System should be grounded while in use to protect operator from electrical shock.
- In the event of an electrical short circuit, grounding reduces the risk of electrical shock by providing an escape wire for the electricity.
- This Air Filtration System is equipped with an approved 3-conductor cord rated at 120V and a 3-prong grounding type plug for your protection against shock hazards.
- Grounding plug should be plugged directly into a properly installed and grounded 3-prong grounding-type receptacle, as shown below.
- The unit must be plugged into an outlet that is properly installed and grounded in accordance with all local codes and ordinances.
- Check with a qualified electrician or service personnel if these instructions are not completely understood or if in doubt as to whether the tool is properly grounded.
- Do not modify plug provided. If it will not fit in outlet, have proper outlet installed by a qualified electrician. Use only 3-wire extension cords, that have 3-prong grounding type plugs and matching 3-conductor receptacles that accept the Planer's plug, as shown below.
- NEVER use a 3-to-2 prong adapter.

Figure 5

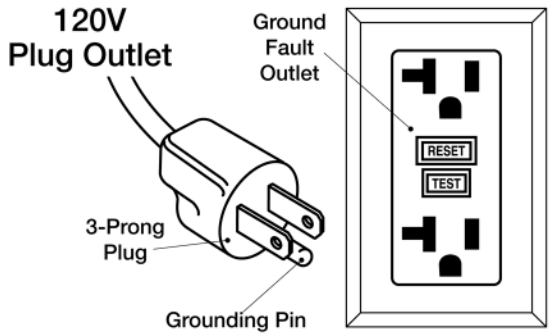

⚠WARNING

Do not permit fingers to touch the terminals of plug when installing or removing from outlet.

- Inspect power cords periodically, and if damaged, have repaired by an authorized service facility.
- The conductor with insulation having an outer surface that is green with or without yellow stripes is the equipment-grounding conductor. If repair or replacement of the electric cord or plug is necessary, do not connect the green (or green and yellow) wire to a live terminal.

GUIDELINES FOR EXTENSION CORD USE

⚠WARNING

The use of an extension cord is not recommended. The use of any extension cord will cause some drop in voltage and loss of power. **Undersized cords cause a drop in voltage** resulting in power loss and overheating.

Use proper extension cords. Ensure extension cord is in good condition. Use only 3-wire extension cords with 3-prong grounding type plugs and 3-pole receptacles which accept the tool plug. When using an extension cord use one heavy enough to carry the current of the Planer. Cords specifically for outdoor use reduce risk of electrical shock and are marked "W" or "W-A".

NOTE: *The tables below show the correct gauge size to cord length and nameplate ampere rating. When in doubt, use a heavier cord.* **The smaller the gauge number—the heavier the cord.**

Determine Minimum AWG Extension Cord Length						
Ampere Rating		Volts	Cord Length—Feet (meters)			
		120V	25' (7.6)	50' (15.2)	100' (30.5)	150' (45.7)
		240V	50' (15.2)	100' (30.5)	200' (61.0)	300' (91.4)
More Than	No More Than		AWG *(American Wire Gauge)*			
0	6		18	16	16	14
6	10		18	16	14	12
10	12		16	16	14	12
12	16		14	12	*Not Recommended*	

NOTE: Extension cord over 50 ft. ***NOT RECOMMENDED***.

Figure 6

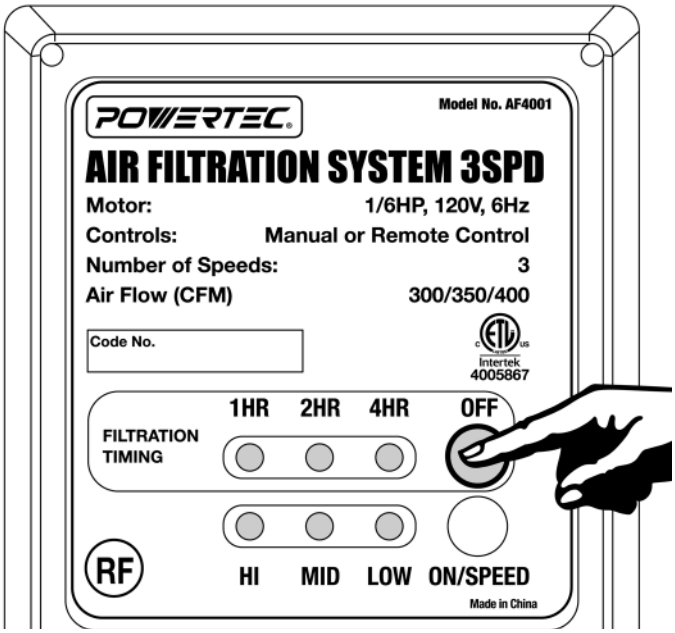

The ***Powertec*** **AF4000/AF4001 Air Filtration System** comes equipped with a Radio Frequency (RF) Remote Control for user convenience and ease of use.

1. Before INITIAL SETUP install two AA Batteries (not included) in the back of the RF Remote Control.

INITIAL SETUP

2. Press **OFF** button—hold for **3 seconds**—Allowing AF4000/AF4001 to enter LEARNING MODE. Note **all six** LEDs illuminate as responding. If six LEDs do not illuminate as responding—wait 30 seconds—press **OFF** button **one time** to exit LEARNING MODE. Repeat process until successful.

3. See Figure 7. While in LEARNING MODE— Point Remote Control at unit control panel and press any button on Remote Control **one time** to pair with AF4000/AF4001 unit. **The LEDs will flash simultaneously <u>three</u> times on the unit display** of AF4000/AF4001 indicating code learning is successful.
4. If not, please repeat steps 2 and 3.

5. **If unit six LEDs do not flash <u>three</u> times** as responding, or unit does not receive a signal from Remote Control after 30 seconds, press **OFF** button on display of AF4000/AF4001 unit **one time** to exit LEARNING MODE. Repeat process until successful.

Figure 7

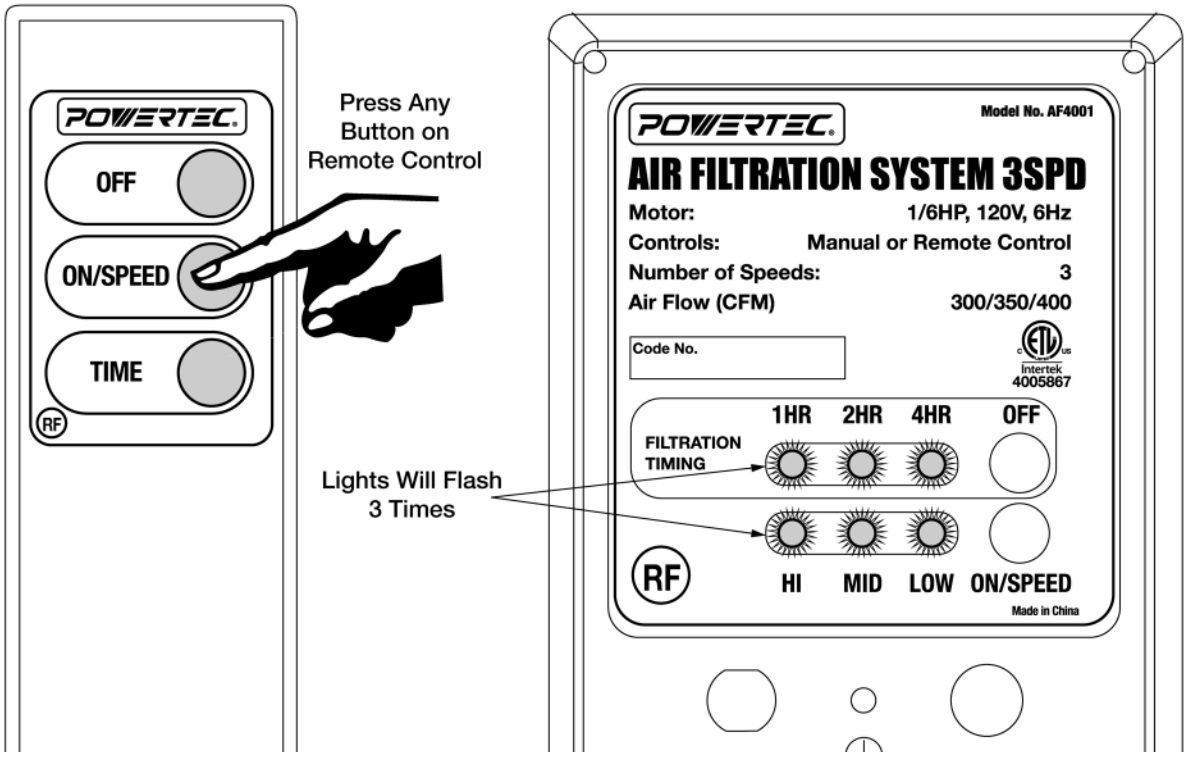

This air filtration system can be controlled using the Remote Control or the Unit Control Panel located at the rear of the unit.

NOTE: *The **filtration timing** can ONLY be controlled with the Remote Control.*

ON/SPEED CONTROL

- Press ON/SPEED button on Remote Control or unit control panel.
- When turned on Air Filtration System will be in LOW speed.
- The LOW speed LED light on unit control panel will illuminate.
- While unit is in ON/SPEED mode—Press ON/SPEED button to change speeds.
- The LOW, MID or HI LED light will illuminate to indicate the selected speed.

FILTRATION TIMING

Filtration timing can ONLY be controlled with the Remote Control.

The TIME button controls timer settings. 1HR, 2HR and 4HR LED lights on control panel illuminate indicating filtration timing length.

- **Press TIME button once**—1HR LED light will illuminate. Machine will operate for 1 hour then turn off.
- **Press TIME button twice** —2HR LED light will illuminate. Machine will operate for 2 hours then turn off.
- **Press TIME button three times**—4HR LED light will illuminate. Machine will operate for 4 hours then turn off.

NOTE: If no filtration timing LED light is illuminated Air Filtration System will operate until the unit is turned off.

TURN THE UNIT OFF

Press **OFF** button on Remote Control or control panel to turn the unit off.

MAINTENANCE 8

⚠WARNING

Disconnect machine from power source whenever adjusting or replacing any parts.

CHANGING THE FILTERS

The inner and outer filters should be replaced and / or cleaned depending on amount of usage and workshop environment. Clogged filters reduce air circulation and filtration.

- Lift up on the clips located at the top and bottom of the cabinet and remove the outer filter.
- Pull the inner filter from the cabinet. The inner filter can be blown out with air or washed to extend its life. The filter should be completely dry before reinstalling into the unit.
- Insert the new or cleaned inner filter and then install the new outer filter. The arrow on the outer filter indicates the air flow direction, ensure the filter is positioned properly.

Figure 8

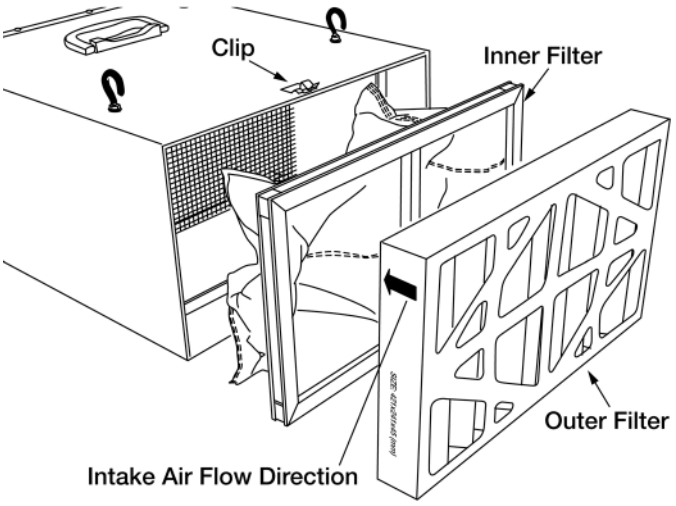

FUSE REPLACEMENT

The fuse/fuse cap is located on the rear of the unit in the control panel. Replace the fuse if needed.

- Turn fuse cap counterclockwise with a Phillips head screwdriver. Pull fuse cap and fuse away from control panel.
- Insert new fuse (UL250V2A) into fuse cap and place fuse cap into control panel. Turn fuse cap clockwise to secure in place.

REMOTE CONTROL BATTERY REPLACEMENT

- Remove the battery compartment cover on the remote control.
- Replace the batteries. Ensure the batteries are oriented as shown inside the battery compartment. Use AA batteries (Not Included)
- Replace the battery compartment cover.

NOTE: *When disposing batteries, think of the protection of the environment. Check with your local authorities for an environmentally safe way for battery disposal.*

GENERAL MAINTENANCE

⚠WARNING

When servicing, use only identical replacement parts. Use of any other parts may create a hazard or cause damage to the Air Filtration System. To ensure safety and reliability, all repairs should be performed by a qualified service technician.

⚠WARNING

Keep the Air Filtration System dry, clean, and free from oil and grease. Always use a clean cloth when cleaning. Never use brake fluids, gasoline, petroleum based products or any strong solvent to clean the Air Filtration System. Chemicals can damage, weaken or destroy plastic which may result in serious personal injury.

TROUBLESHOOTING

Follow all safety precautions when servicing unit

SYMPTOM	POSSIBLE CAUSE(S)	CORRECTIVE ACTION
Motor will not start	**1.** Machine not plugged in	Plug power cord into electrical outlet
	2. ON/SPEED button in in OFF position	Press the ON/SPEED button to turn unit on
	3. Power switch or cord is faulty	Replace switch or power cord
	4. Blown fuse or tripped circuit breaker	Overloaded electrical circuit
	5. Remote control is not working or batteries are dead	**Point Remote Control directly at control panel** • Make sure Radio Frequency (RF) sensor on control panel is not blocked • Move Remote Control closer to control panel for direct RF signal • Replace batteries (not included). See ***Remote Control Battery Replacement***
	6. Infrared receiver not working	Inspect or replace control panel circuit board
	7. Control panel ON/OFF button not working	Inspect or replace control panel circuit board
	8. Control panel fuse is blown	Replace blown fuse. See ***Fuse Replacement*** for instruction
	9. Motor does not work	Replace motor
Motor stalls or does not have full power	**1.** Incorrect line voltage	Have a qualified electrician check circuit for proper voltage
	2. Motor capacitor has failed	Replace motor capacitor
	3. Control panel circuit board has failed	Inspect or replace control panel circuit board
System has vibration or is overly noisy	**1.** Motor or cabinet part is loose	Inspect all hardware and retighten or replace
	2. Motor fan is contacting cover	• Check position of fan and cover • Adjust or replace loose or damaged part
	3. Motor bearings are lout	• Rotate motor shaft to isolate the issue • Replace worn bearings
	4. Air filters rattle	Inspect and reposition filters
	5. Impeller fan is loose, unbalanced or damaged	**Turn machine off and unplug from power** • Inspect impeller for bent or damaged areas • Secure impeller on motor shaft and replace if damage is found
	6. Motor base is loose in the cabinet	• Tighten any loose fasteners
Poor air flow and dust collection	**1.** Filters are dirty	Clean or replace both air filters frequently See ***Change Filters*** for instruction
	2. Poor system location in workshop	Reposition system in workshop for best air circulation
Fuse blows or circuit breaker trips	**1.** Overloaded electrical circuit breaker	Reduce the number of items on the circuit
	2. Wrong fuse or circuit breaker	Replace with correct fuse or circuit breaker
	3. Undersized or excessive length extension cord	Use correct size extension cord See ***Guidelines for Extension Cord Use***, page 6

10 AIR FILTRATION SYSTEM PARTS ILLUSTRATION

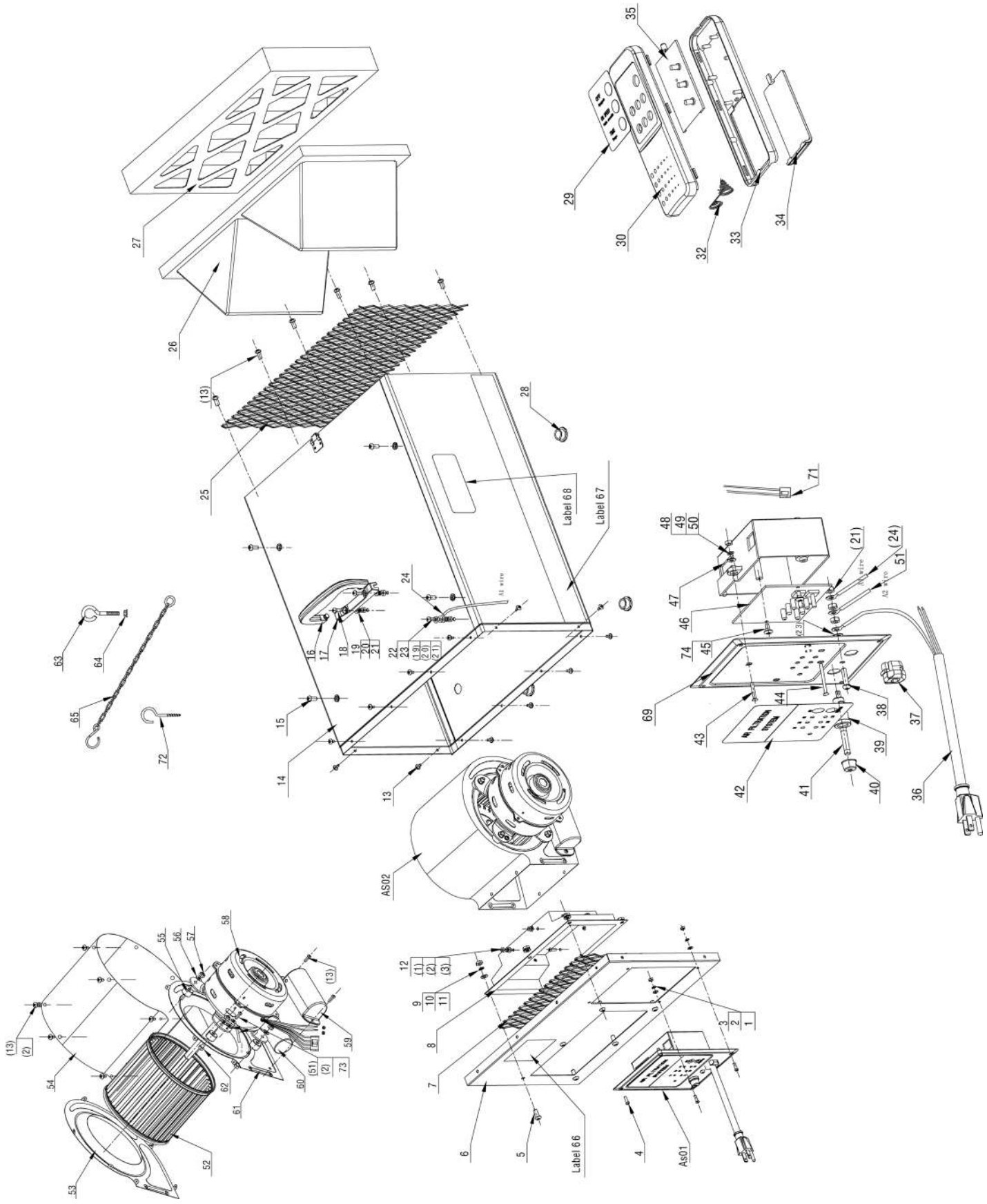

AIR FILTRATION SYSTEM PARTS LIST

Key No.	Part No.	Description	Specification	Qty
1	AF4000001	Hex Nut	M4	13
2	AF4000002	Flat Washer	Ø4	13
3	AF4000003	Lock Washer	Ø4	13
4	AF4000004	Pan Head Screw	M4X12	5
5	AF4000005	Pan Head Screw	M6X15	6
6	AF4000006	Air Box Front Cover		1
7	AF4000007	Grid Plate	266X140X1	1
8	AF4000008	Air Guide		1
9	AF4000009	Hex Nut	M6	6
10	AF4000010	Flat Washer	Ø6	6
11	AF4000011	Lock Washer	Ø6	6
12	AF4000012	Socket Head Cap Screw	M4X12	8
13	AF4000013	Self Tapping Screw	ST4X10	10
14	AF4000014	Air Box	ST4.8×10L	1
15	AF4000015	Pan Head Screw	M6X12	4
16	AF4000016	Handle	M6 x 14	1
17	PAF400017	Handle Bracket		1
18	AF4000018	Pan Head Screw	M5X16	2
19	AF4000019	Flat Washer	Ø5	3
20	AF4000020	Lock Washer	Ø5	3
21	AF4000021	Hex Nut	M5	6
22	AF4000022	Pan Head Screw	M5X12	1
23	AF4000023	Tooth Lock Washer	Ø5	2
24	AF4000024	Wire	18AWG	1
25	AF4000025	Grid Plate	251X428	1
26	75006	Inner Pocket Filter	421x241x160	1
27	75007	Electostatic Outer Filter	421x241x45	1
28	AF4000028	Rubber Foot	Ø3	4
29	AF4000029	Remote Control Label		1
30	AF4000030	Remote Control Top Cover		1
32	AF4000032	Spring	Ø5.3xØ10	1
33	AF4000033	Remote Control Bottom Cover		1
34	AF4000034	Battery Cover		1
35	AF4000035	Remote Control PCB		1
36	AF4000036	Power Cord		1
37	AF4000037	Strain Relief	6P-4	1
38	AF4000038	Pan Head Screw	M5X20	1
39	AF4000039	Fuse Holder		1
40	AF4000040	Fuse Holder Cap		1
41	75013	Fuse	UL250V2A	1
42	AF4000042	Control Panel Label		1
43	AF4000043	Flat Head Screw	M3X30	2
45	AF4000044	Self Tapping Screw	ST4X14	2
46	AF4000045	Printed Circuit Board		2
47	AF4000046	Switch Box		1
48	AF4000047	Flat Washer	Ø3* 6	4
49	AF4000048	Lock Washer	Ø3	4
50	AF4000049	Hex Nut	M3	4
51	AF4000050	Wire		1
52	AF4000051	Fan Wheel		1
53	AF4000052	Fan Housing Cover-L		1
54	AF4000053	Fan housing Cover-M		1
55	AF4000054	Rubber Spacer		4
56	AF4000055	Large Washer	5	4
57	AF4000056	Nylon Insert Lock Nut	M5	4
58	75010	Motor		1
59	AF4000059	Capacitor Cover		1
60	AF4000060	Capacitor		1

Key No.	Part No.	Description	Specification	Qty
61	AF4000061	Fan Housing Cover-R		1
62	AF4000062	Hex Cap Screw	M5X25	4
63	AF4000063	Eye Bolt		4
64	AF4000064	Flange Nut	M6	4
65	AF4000065	Hook Chain		4
66	AF4000066	Wire Nut 18AWG		2
67	AF4000067	Stripe Label		2
68	AF4000068	Logo Label		2
69	AF4000069	Switch Box Cover		1
70	AF4000070	Lock Wire Nut	P2S	2
71	AF4000071	Lock Wiring Nut		1
72	AF4000072	Hook Screw		4
73	AF4000073	Tooth Lock Washer	Ø4	1
74	AF4000074	Insulation Washer	Ø3 #4170	2

WARRANTY

Thank you for investing in a ***POWERTEC*** power tool. This product has been designed and manufactured to meet high quality standards and is guaranteed for domestic use against defects in workmanship or material for a period of 12 months from the date of purchase. This guarantee does not affect your statutory rights.

SOUTHERN TECHNOLOGIES LLC. BENCH TOP AND STATIONARY POWER TOOL LIMITED 1 YEAR WARRANTY AND 30-DAY SATISFACTION GUARANTEE POLICY

POWERTEC products are designed and manufactured by **Southern Technologies LLC.** All warranty communications should be directed to **Southern Technologies LLC** by calling 847-780-6120 (toll free), 9 AM to 5 PM, Monday through Friday, US Pacific Time.

30-DAY SATISFACTION GUARANTEE POLICY

During the first 30 days after the date of purchase, if you are dissatisfied with the performance of this ***POWERTEC*** tool for any reason, you may return the tool to the retailer from which it was purchased for a full refund or exchange. You must present proof of purchase and return all original equipment packaged with the original product. The replacement tool will be covered by the limited warranty for the balance of the one year warranty period.

LIMITED ONE YEAR WARRANTY

This warranty covers all defects in workmanship or materials in this ***POWERTEC*** tool for a one year period from the date of purchase. This warranty is specific to this tool. **Southern Technologies, LLC** reserves the right to repair or replace the defective tool, at its discretion.

HOW TO OBTAIN SERVICE

To obtain service for this ***POWERTEC*** tool you must return it, freight prepaid, to ***POWERTEC***. You may call (toll free) 847-780-6120 for more information. When requesting warranty service, you must present the proof of purchase documentation, which includes a date of purchase. ***POWERTEC*** will either repair or replace any defective part, at our option at no charge to you. The repaired or replacement unit will be covered by the same limited warranty for the balance of one year warranty period.

WHAT IS NOT COVERED

This warranty applies to the original purchaser at retailer and may not be transferred.
This warranty does not cover consumable items such as saw blades, knives, belts, discs, cooling blocks and sleeves.
This warranty does not cover required service and part replacement resulting from normal wear and tear, including accessory wear.
This warranty does not cover any malfunction, failure or defect resulting from:
1) misuse, abuse, neglect and mishandling not in accordance with the owner's manual.
2) damage due to accidents, natural disasters, power outage, or power overload.
3) commercial or rental use.
4) alteration, modification or repair performed by persons not recommended by ***POWERTEC***.

DISCLAIMER

To the extent permitted by applicable law, all implied warranties, including warranties of MERCHANTABILITY or FITNESS FOR A PARTICULAR PURPOSE, are disclaimed. Any implied warranties, that cannot be disclaimed under state law are limited to one year from the date of purchase. **Southern Technologies LLC**. is not responsible for direct, indirect, incidental or consequential damages. Some states do not allow limitations on how long an implied warranty lasts and/or do not allow the exclusion or limitation of incidental or consequential damages, so the above limitations may not apply to you. This warranty gives you specific legal rights, and you may also have other rights which vary from state to state. Southern Technologies LLC., makes no warranties, representations, or promises as to the quality or performance of its power tools other than those specifically stated in this warranty.

POWERTEC®

Southern Technologies, LLC
Chicago, IL 60606