Display Tablet

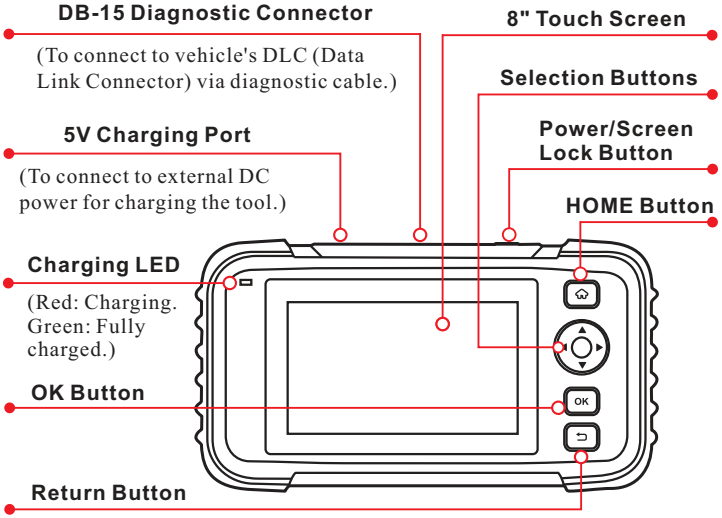

1 Charging & Turning On

There are two charging methods available:

Via Charging Cable: Plug one end of the included charging cable into the 5V charging port of the tool, and the other end to the external DC power.

Via Diagnostic Cable: Insert one end of the diagnostic cable into the DB-15 connector of the tool, and the other end to the vehicle's DLC.

Once the charging LED illuminates solid green, it indicates that the battery is fully charged.

Press the [Power] button to power it on.

2 Getting Started

If it is the first time you have used this tool, you need to make some system settings and keep the diagnostic software synchronized with the latest version.

Follow the steps below to proceed.

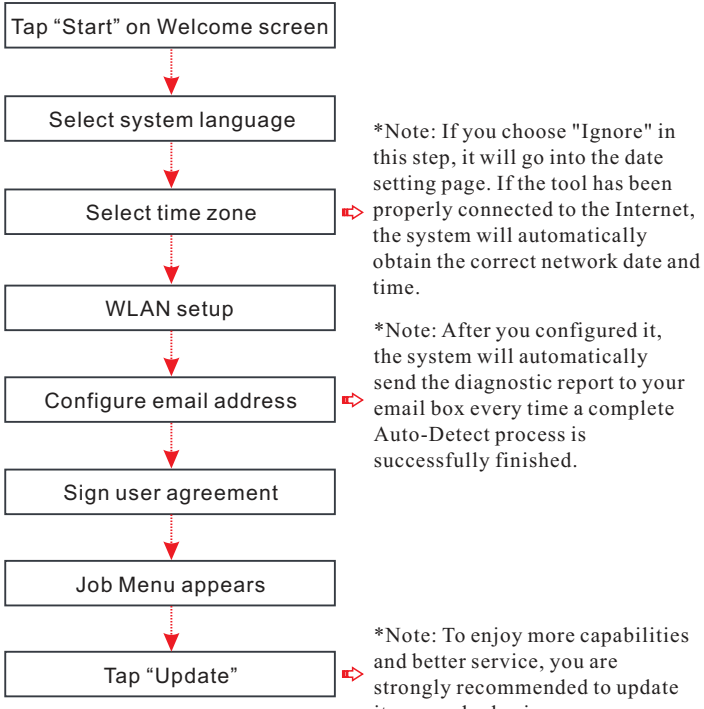

+86 755 8455 7891
overseas.service@cnlaunch.com

3 Preparation

1. Turn the ignition off.
2. Locate vehicle's DLC: It provides standard 16 pins and is generally located on driver's side, about 12 inches away from the center of dashboard. See Figure **DLC Location**. If DLC is not equipped under dashboard, a label indicating its position will be given.

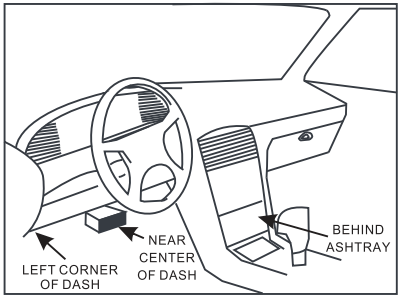

In case no DLC is found, please refer to Automobile Repair Manual.

3. Plug one end of the diagnostic cable into the DB-15 connector of the tool, and tighten the captive screws. Connect the other end to the vehicle's DLC.

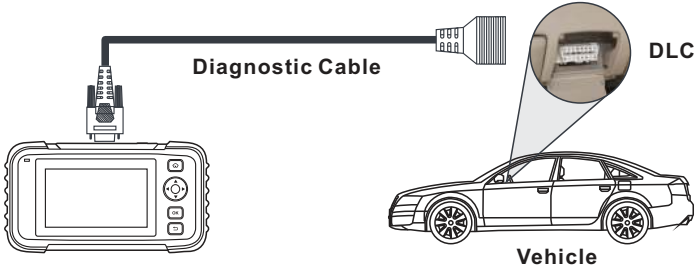

*Note: The tool ONLY works with the 12V passenger cars equipped with standard OBD-II diagnostic socket.

4. Turn the ignition key on.

4 Start Diagnostics

AutoDetect and manual diagnosis are supported. If the AutoDetect fails, you can choose to input the VIN manually or exit the AutoDetect session to switch to manual diagnosis mode.

*Note: If "Automatic detection on connect" in "Settings" is set as ON, this step can be ignored.

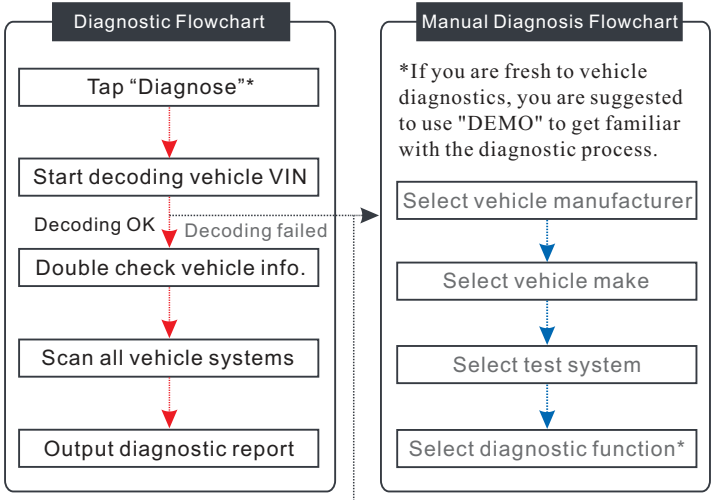

Input the VIN, and tap "OK", the system will automatically identify the vehicle model. If the vehicle VIN is successfully decoded, it will perform auto-diagnosis until a diagnostic report is automatically output.

*Note: The most recognizable location for VIN is in the top left corner on the vehicle's dashboard. Other locations include the driver's door or post, and the firewall under the hood.