REDLINE
EASY CONNECT
EXPANSION ADAPTER

FOR 2019-2021 SILVERADO/SIERRA 1500

Hello Fellow OPT7-ites, Introducing the Redline Easy Connect Harness to Flat 4-Pin Extension Adapter Harness

The OPT7 Redline Easy Connect Expansion Adapter Harness is purpose-built to be used as a trailer accessory for 2019-2021 Silverado/Sierra 1500 models. It provides a plug-and-play style that allows you to quickly ,seamlessly and virtually hidden installation without cutting or splicing your factory harnesses.

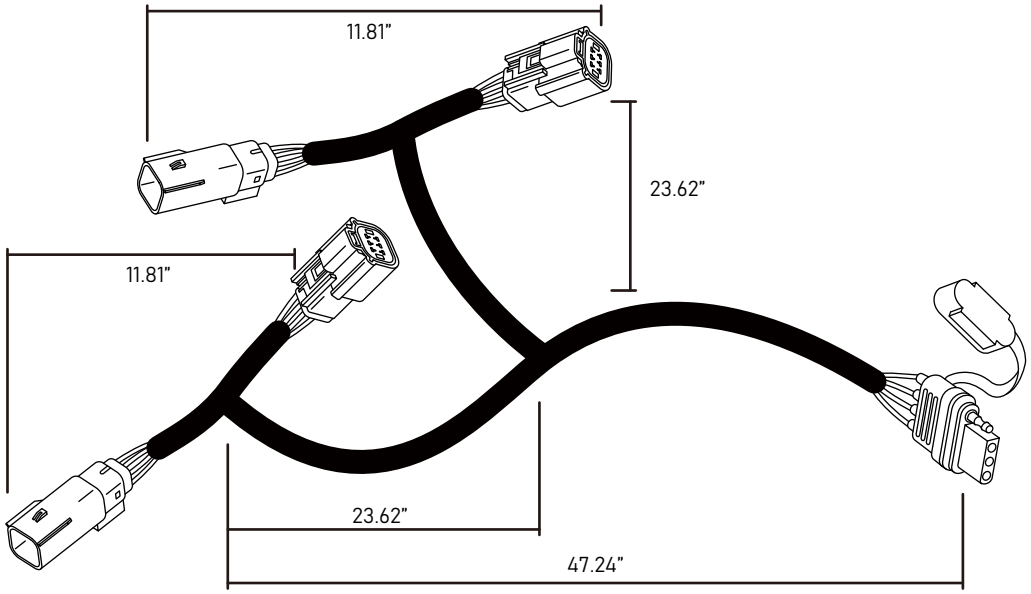

INSTALLATION

STEP 1

First, locate your vehicle's OEM wiring harnesses #L,#R (located behind the rear bumper and near the spare tire) as shown in Figure 1.

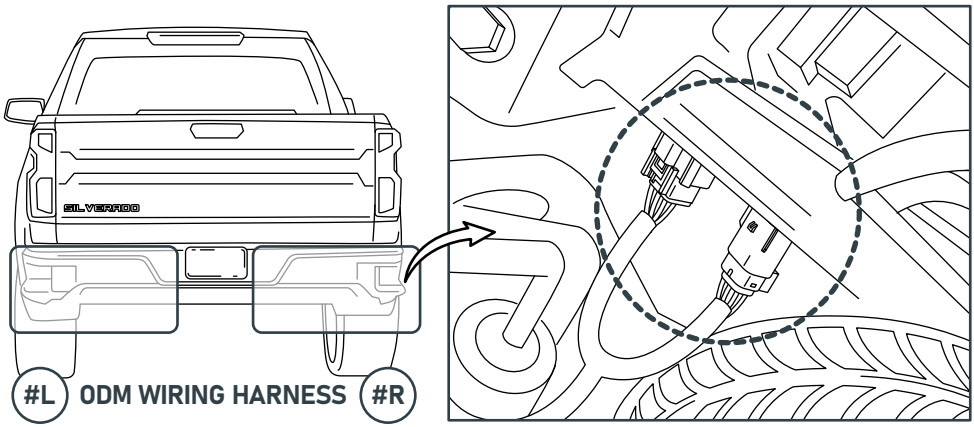

STEP 2

Then lightly press the latch on the connector to release the OEM wiring harness as shown in Figure 2.

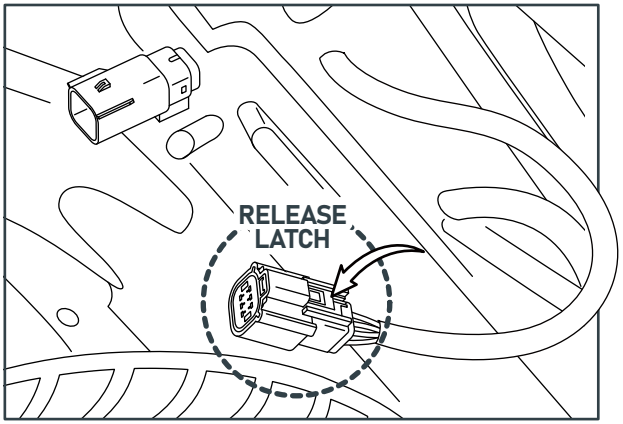

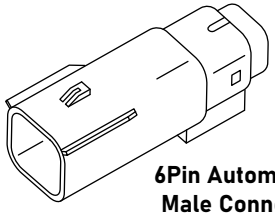

6Pin Automobile Male Connector

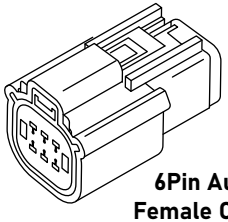

6Pin Automobile Female Connector

INSTALLATION

STEP 3

To make it easier for you to identify the signal location represented by the Connetor/Wiing. Please read the wiring instructions below carefully before commencing any work.

ODM WIRING HARNESS

RIGHT
Passenger Side

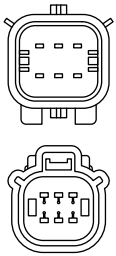

LEFT
Driver's Side

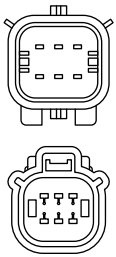

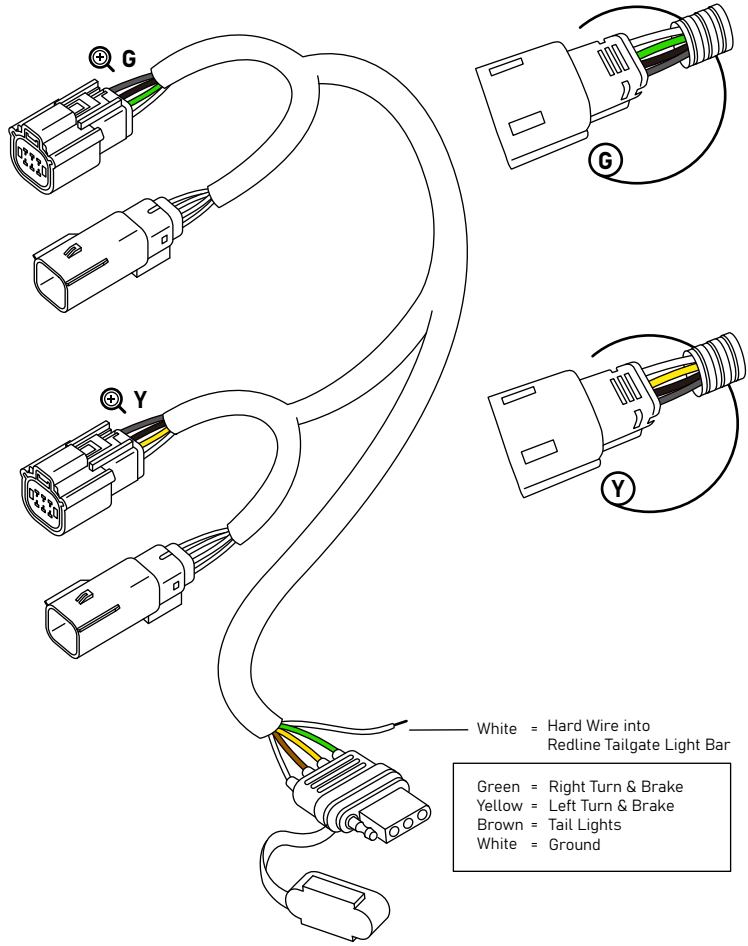

INSTALLATION

STEP 4

Grab the Redline Easy Connect Expansion Adapter Harness and connect it to the male and female(see fig. 1) connectors of the vehicle as shown in Figure 4 . Then repeat the same steps for the other side.

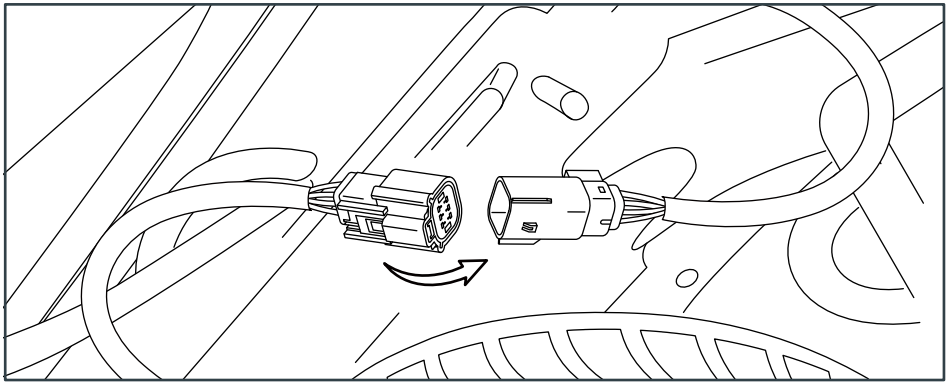

IMPORTANT

In order to prevent damage to connectors by weather conditions **(rain or snow)**, ensure that all wires are waterproof and installed inside the bumper.

STEP 5

Use some zip ties to secure the flat 4PIN trailer connector and reverse wire in place along the inner bumper.

STEP 6

Finally, connect the available tailgate light bar to the 4PIN trailer connector and the reverse wire on the light bar to hardwire directly into the reverse tail lights for full functionality.