Product Manual

PAL00-16807

ScoopFree® Smart Self-Cleaning Litter Box

PAL00-16808

ScoopFree® Smart Covered Self-Cleaning Litter Box

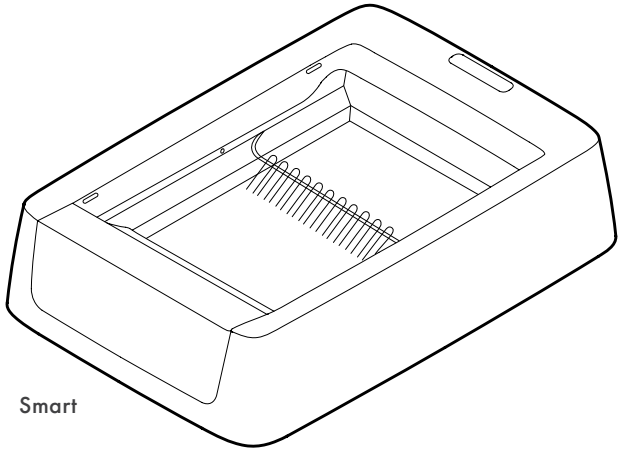

Smart

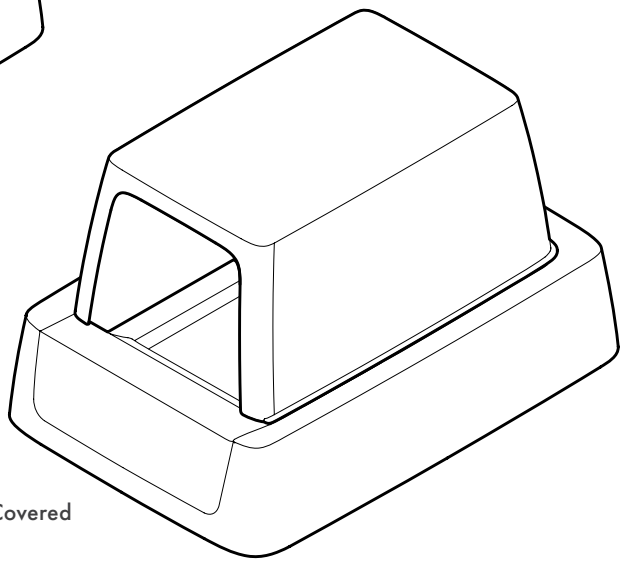

Smart Covered

Please read this entire Product Manual before beginning.

Welcome

You and your pet were made for each other. Our aim is to help you have the best companionship and the most memorable moments together. Your new PetSafe® ScoopFree® Smart Self-Cleaning Litter Box automatically cleans for weeks with no scooping or refilling, so you can spend more time with your cat and less time worrying about the litter box.

We know that safe pets make happy owners. Before getting started, please take a moment to read through the important safety information. If you have any questions, please don't hesitate to contact us.

Hereinafter Radio Systems Corporation and any other affiliate or Brand of Radio Systems Corporation may be referred to collectively as "We" or "Us".

IMPORTANT SAFETY INFORMATION

Explanation of Attention Words and Symbols used in this Product Manual

⚠ This is the safety alert symbol. It is used to alert you to potential personal injury hazards. Obey all safety messages that follow this symbol to avoid possible injury or death.

⚠WARNING WARNING indicates a hazardous situation which, if not avoided, could result in death or serious injury.

⚠CAUTION CAUTION, used with the safety alert symbol, indicates a hazardous situation which, if not avoided, could result in minor or moderate injury.

CAUTION CAUTION, used without the safety alert symbol, indicates a hazardous situation which, if not avoided, could result in harm to your pet.

NOTICE NOTICE is used to address practices not related to personal injury.

⚠WARNING

When using electric appliances, basic precautions should always be followed to reduce the risk of fire, electric shock and/or injury including the following:

- Read all the instructions before using the appliance.
- Do not submerge or expose the electrical components to water or cleaning solutions.
- To protect against electric shock, do not place the unit, electrical power adaptor or plug in water or other liquids. If the plug of the device gets wet, turn off the electricity to that electrical outlet. Do not attempt to unplug.
- Do not place or store unit where it can fall or be pulled into a tub or sink.
- Do not pull on the electrical power adaptor to remove the plug from the electrical outlet. To unplug, grasp the plug, not the power cord.
- Do not use accessories or attachments that are not recommended by the manufacturer as they may cause fire, electric shock or injury.
- Do not operate if the unit has a damaged electrical power adaptor or plug, if it is malfunctioning or has been damaged. Call the Customer Care Center immediately for further instructions.
- Pregnant women, babies, small children and immune-deficient individuals should avoid contact with cat litter waste. Cats' waste may contain toxoplasmosis bacteria that can be harmful to these individuals.
- Packaging material is not a toy. Keep away from children and pets.
- Keep plastic bags away from babies and small children. Do not use in cribs, beds, carriages or play pens. The thin film may cling to nose and mouth and prevent breathing.
- To reduce the risk of injury, close supervision is necessary when the unit is used by or near children. Do not allow small children to play with, in or around this device. It is not a toy.

⚠CAUTION

- Avoid contact with moving parts.
- Do not insert ANYTHING into the litter box when the rake is moving.
- Do not allow anything to rest on the power cord. Do not plug in power adaptor in an area where people or animals may walk or trip on cord.
- Always unplug the unit when not in use, before putting on or taking off parts and before cleaning.
- Do not disassemble the unit while plugged in.
- The rake may move automatically when you connect the power to the litter box. Make sure there is nothing inside the litter box when you plug in the power cord.
- Wash your hands after handling used cat litter.
- For privacy cover models, do not lift the litter box by the cover.

CAUTION

- Adult supervision is recommended during your cat's initial introduction.
- If your kitten is under 6 months of age, leave the unit UNPLUGGED and scoop waste until kitten is 6 months old.
- Not intended for use by handicapped, incapacitated or very old cats that might experience difficulty in entering or leaving the litter box.
- DO NOT ATTEMPT TO USE THIS PRODUCT FOR ANY OTHER PURPOSE. This product is designed for use with cats only. The litter box is intended solely for the safe elimination of cat waste. This device is not intended to harm, injure or provoke. Using this product in a way that is not intended could result in violation of federal, state or local laws.

NOTICE

- Remove all packaging material before connecting the power adaptor.
- Do not place litter box on an unsteady surface.
- Do not use any other type of cat litter or tray. Only use PetSafe® ScoopFree® Disposable Crystal Litter Trays and products with this litter box. The crystal litter is specially designed and pre-measured for optimal performance. Using a different type, size, too much or not enough litter can cause the litter box to malfunction. Using a different tray or litter may void the product warranty.
- Using the tray longer than recommended may result in leakage. Placing the litter box in a high humidity area, such as a bathroom or near a shower, may result in shorter tray life.
- If solid waste is collecting outside the waste trap, it is time to change the litter tray.
- Increased elimination habits of cats who consume a diet high in crude fiber, ash and by-products, cats older than 10 years of age and cats with diabetes, kidney and thyroid problems may result in a shorter litter tray life. Kittens may have softer stool than mature cats, which increases the likelihood that it may stick to the litter box rake.
- Do not use outdoors. FOR INDOOR HOUSEHOLD USE ONLY.

PetSafe® ScoopFree® Smart Self-Cleaning Litter Boxes should be used with healthy cats. We recommend that you take your cat to a veterinarian before using the litter box if he or she is not in good health.

SAVE THESE INSTRUCTIONS

What's Covered

In the Box 4
System Requirements 4
Specifications and Automatic Operation 4
LED Light Indicator Quick Guide 5
Getting Started 6
Cover Installation 7
Wi-Fi Button 7
Manual Rake Button 7
Health Counter 7
Introducing Your Cat to the Litter Box 7
Maximizing Litter Tray Life 8
Changing the Litter Tray 8
Care and Cleaning 9
Troubleshooting 9
Customer Care International 9
Replacement Parts and Accessories 10
Terms of Use and Limitation of Liability 10
Compliance 11
Important Recycling Advice 11
Warranty 11

In the Box

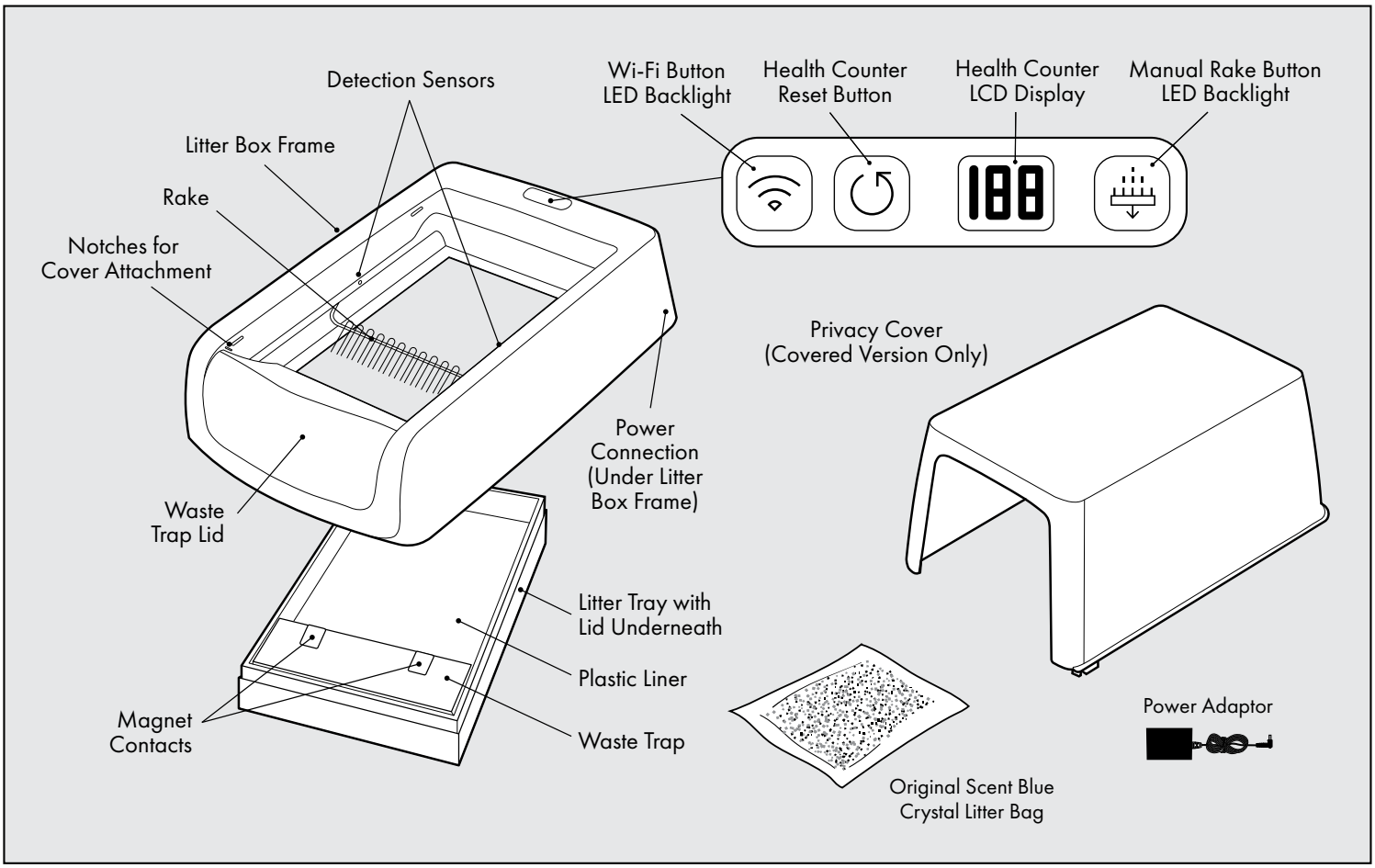

System Requirements

- Wireless router 2.4 GHz (802.11b/g/n)
- High-speed internet connection

Specifications and Automatic Operation

Cleaning Cycle:

- Detection sensors recognize when your cat is inside the litter box. A timer starts a 20 minute countdown after your cat leaves the litter box.
- If your cat returns to the litter box during the timer countdown, the timer stops. The timer countdown will reset when your cat leaves the litter box again.
- Cleaning cycle automatically runs 20 minutes after your cat leaves the litter box and rakes solid waste into the waste trap.

LED Light Indicator Quick Guide

LED Color (Manual Rake Button)	Litter Box Function
Solid Blue	The litter box has power and is functioning normally with the rake in the home position.
Blinking Blue	The litter box is counting down to the rake cycle (from 20 minutes) or raking is currently in progress.
Fast Blinking Blue	The rake is paused. This only happens when the manual rake button is pushed while the rake is in motion.
Blue with Red Flashes	A mechanical error has occurred during the rake cycle. Check for any obstructions around the rake and remove them if necessary. To reset, press the manual rake button and the rake should finish the cycle and return to home position. If the error persists, the LED will change to solid red.
Solid Red	If the light turns solid red after the blue and red flashing, then a mechanical error has occurred that cannot be fixed by pressing the manual rake button. Please call our Customer Care Team at +1 (800) 732-2677 for assistance. If the LED turns solid red without the blue and red flashing occurring first, then the sensors are blocked. Remove any obstructions and clean the sensors if necessary.
LED Color (Wi-Fi Button—On-Boarding)	**Litter Box Function (During On-Boarding Only)**
Blinking Yellow	The litter box is in pairing mode and is ready to connect to your phone.
Solid Yellow	The litter box is connected to the phone but is not yet connected to the internet.
Fast Blinking Blue	The litter box is trying to connect to the Wi-Fi and the internet.
Slow Blinking Blue	The litter box is connected to the Wi-Fi but not the internet.
Solid Blue	The litter box is connected to both the Wi-Fi and the internet.
Blinking Red	The password you entered is incorrect. You will need to re-enter your password and try again.
LED Color (Wi-Fi Button)	**Litter Box Function**
Solid Blue	The Wi-Fi is enabled and the litter box is connected to the internet.
Blinking Blue	The Wi-Fi is enabled and the litter box is trying to connect to the internet.
None	The Wi-Fi is not enabled and the litter box is not connected to the internet.

Getting Started

Litter Box Setup

1. Find a clean, dry and level location with a standard power outlet nearby. Insert the power supply into the connection under the litter box frame. Push the cord into the clips on either side of the power connection to hold it in place.
2. Install the waste trap by aligning the pegs at the bottom of the waste trap lid with the notches at the front of the litter box frame. Push the waste trap lid down until it snaps into place.

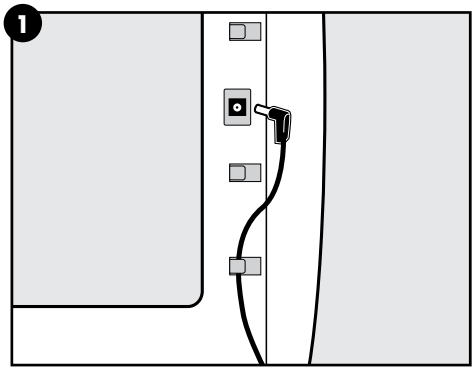

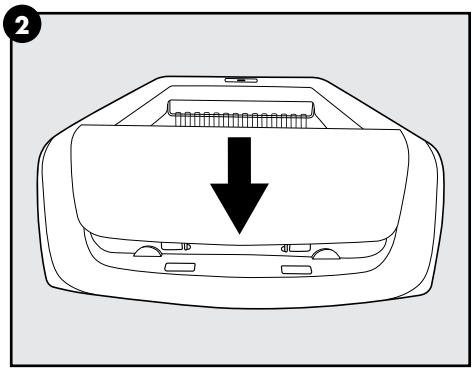

3. Remove the lid and place it under the litter tray. The lid is extra protection against leaks and will be used later for disposal.
4. Empty the crystal litter into the litter tray and spread evenly. For best results, sprinkle one handful of the litter under the waste trap.

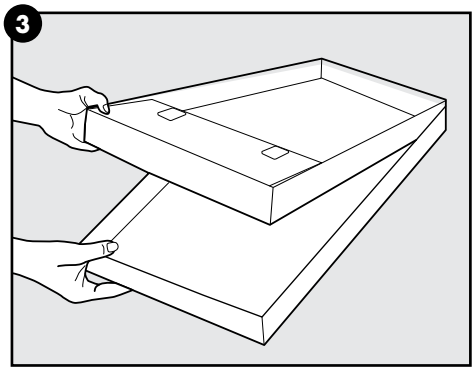

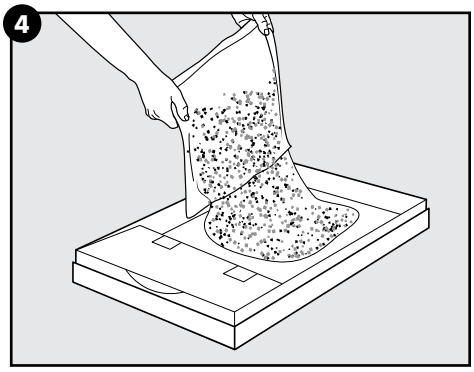

5. Lift the litter box frame and place the litter tray under it with the waste trap on the tray below the waste trap lid on the litter box.
6. Lower the litter box frame until you hear a click, which confirms the magnets on the waste trap lid have connected to the magnet contacts on the litter tray.

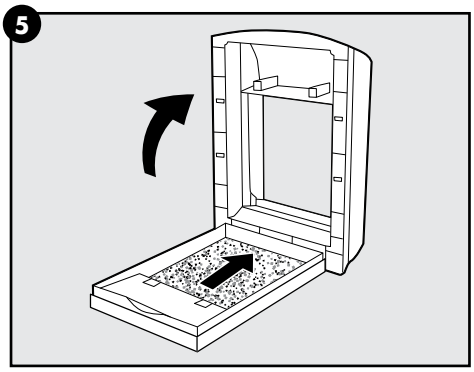

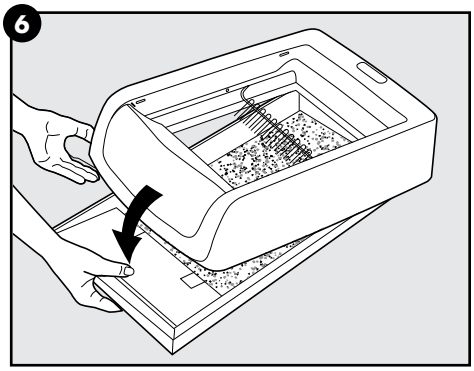

7. Plug the power adaptor into the wall outlet. After the rake stops, make sure the Manual Rake button LED light is solid blue. If the light is blinking blue, then something has moved in front of the sensors and the rake cycle is counting down from 20 minutes.
8. Search for "myPetSafe" in your phone's app store and download the app. Locate and open the app on your smartphone, and follow the onscreen instructions

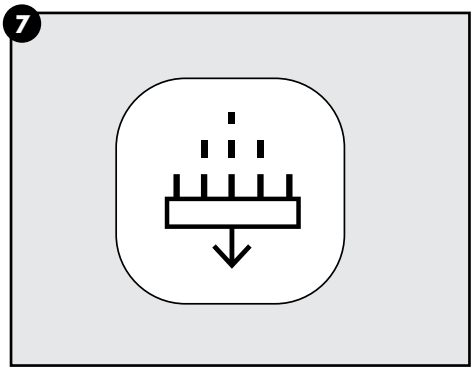

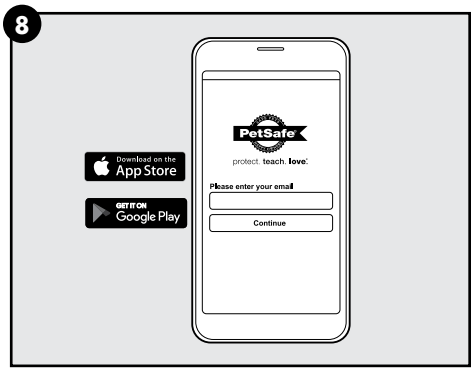

Cover Installation

Note: The cover is included with covered and top-entry models.

1. Place the cover on the litter box so that all four pegs on the cover are aligned with the notches along the inside of the litter box.
2. Press down on the cover firmly to ensure that all four pegs have snapped into place.

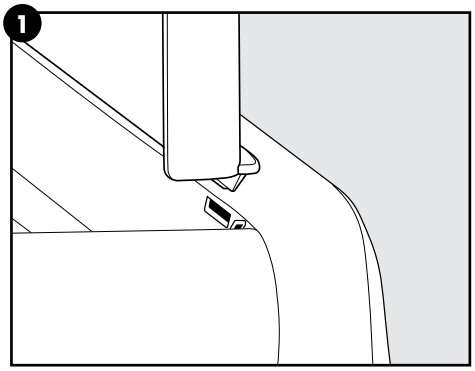

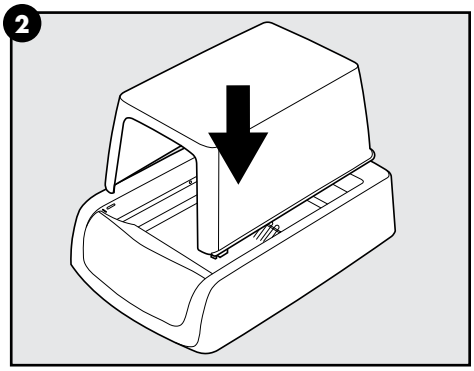

Wi-Fi Button

The Wi-Fi button has an LED backlight to let you know if your unit is connected to the internet. The light should be solid when the Wi-Fi is enabled and connected to the internet.

1. To reset your litter box's Wi-Fi settings, press and hold the Wi-Fi button for 10 seconds. The button should then blink yellow, indicating that it is ready to be reconnected to the Wi-Fi and the internet.
2. The Wi-Fi button has different LED indicators for on-boarding the app and for normal functionality. Refer to the LED indicator chart on page 5 for more details.

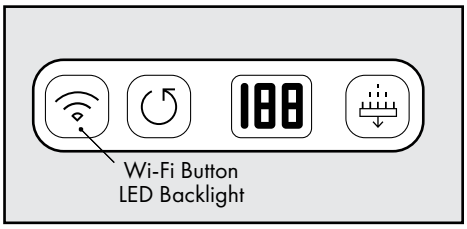

Manual Rake Button

Although the PetSafe® ScoopFree® Smart Self-Cleaning Litter Box is designed to automatically clean the litter box, you may push the manual rake button once to immediately begin the cleaning cycle.

1. To stop the cleaning cycle and rake from moving, push the manual rake button again.
2. If the rake stops somewhere other than the home position at the back of the litter box, push the manual rake button to return the rake to home position.

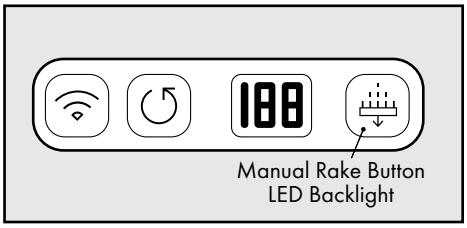

Health Counter

The health counter keeps track of your cat's litter box activity to help better understand when to change the litter tray. Also, irregularities in how frequently your cat uses the litter box might be a sign of a problem. Share your cat's litter box usage with your veterinarian.

- The health counter automatically increases by 1 each time the rake completes a cycle.
- To reset the counter, press and hold the health counter reset button next to the counter display for 3 seconds or until the display resets to 0. We suggest you reset the counter each time you replace the litter tray.

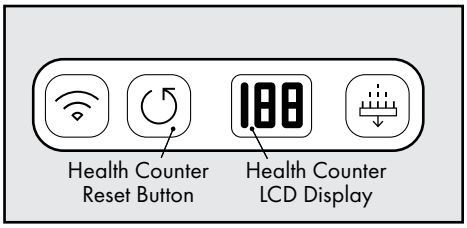

Introducing Your Cat to the Litter Box

1. Place the new PetSafe® ScoopFree® Smart Self-Cleaning Litter Box next to your cat's current litter box. Allow your cat to have access to the old and new litter boxes for at least a week. This time may vary depending on the temperament of your cat.
2. Add a few handfuls of your cat's old litter to the crystal litter tray. You can also add a few handfuls of the crystal litter to your cat's old litter box.
3. Stop cleaning your cat's old litter box, allowing it to remain dirty. Cats prefer a clean litter box, so as the litter in the old litter box gets shallow and its odor increases, this should make the PetSafe® ScoopFree® Smart Self-Cleaning Litter Box more appealing.
4. Once your cat has transitioned to the PetSafe® ScoopFree® Smart Self-Cleaning Litter Box, remove the old litter box from the area.

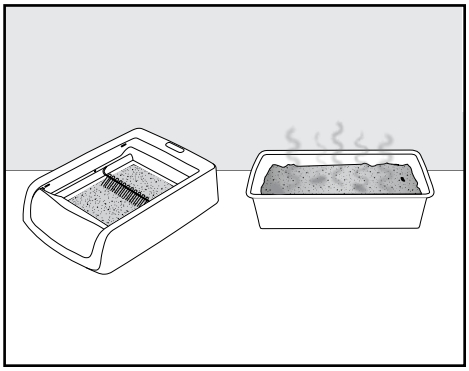

Note: Although the PetSafe® ScoopFree® Smart Self-Cleaning Litter Box is quiet when running and only runs after use, you may want to leave it unplugged for a few days so your cat can get used to it without any distractions. If you leave it unplugged, you need to manually scoop solid waste until your cat is fully transitioned. Also, if you are using a cover on the PetSafe® ScoopFree® Smart litter box and have not used one in the past, you may want to remove it until your cat is using the PetSafe® ScoopFree® Smart litter box.

For Kittens Under 6 Months Old

CAUTION

If your kitten is under 6 months of age, leave the unit UNPLUGGED and scoop waste until kitten is 6 months old.

Place the tray with the crystal litter under the litter box frame and remove the waste trap lid on the front of the litter box to make it easier for the kitten to enter and exit. Once your kitten is 6 months old, plug in the PetSafe® ScoopFree® Smart Self-Cleaning Litter Box and replace the waste trap lid for a box that is hassle-free and consistently clean.

Maximizing Litter Tray Life

- It is recommended to have more than one litter box for more than one cat.
- Do not place the litter box in bathrooms, showers and basements. Moisture in the air can shorten the life of the crystal litter and disposable tray.
- Place the litter box in a room with moving air to pull away moisture, such as a room with a fan.
- Cats with diets high in crude fiber and ash content will produce more solid waste, which may prematurely fill the waste trap. Consider changing to food with no byproducts or fillers.
- Increased elimination habits of older cats and cats with diabetes, kidney and thyroid problems may result in a shorter tray life.
- Stirring the crystals once a week may help the tray life for cats that are ill or have a high urine output. Stirring will also distribute saturated crystals, which will also help with cats who consistently urinate in the same spot or do not dig.
- Kittens are not as developed, so their solid waste can be runny. Kittens will go through trays faster than adult cats.

Changing the Litter Tray

1. Lift the litter box frame and remove the litter tray.
2. Remove the lid from under the litter tray, and cover the top of the tray. Secure the lid with tape if desired or place within a drawstring garbage bag.
3. Throw the used litter tray into the trash.
4. Install a new litter tray.

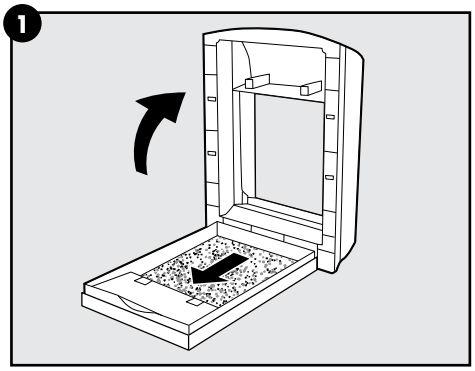

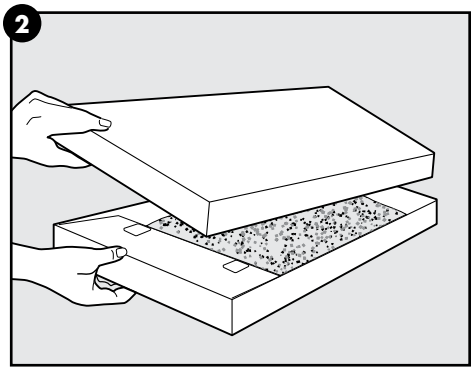

Litter Type:

- Only use PetSafe® ScoopFree® Disposable Crystal Litter Trays. The crystal litter is specially designed and pre-measured to work with PetSafe® ScoopFree® Smart Self-Cleaning Litter Boxes. The crystal litter absorbs urine and dries solid waste to remove odors. The crystal litter DOES NOT CLUMP.
- DO NOT use any type of clay litter, natural litter or any other crystal litter.
- DO NOT use any other tray. Only use PetSafe® ScoopFree® products.

Recommended Litter Tray Replacement Chart*	
	**20–30 Days**
	**10–15 Days**
 +	**7–10 Days**

***Depending on cat age, weight, health and diet**

WARNING

Pregnant women, babies, small children and immune deficient individuals should avoid contact with cat litter waste. Cats' waste may contain toxoplasmosis bacteria that can be harmful to these individuals.

Care and Cleaning

1. Unplug the power adaptor from the wall outlet, and disconnect it from the litter box.
2. Lift and remove the litter box frame from the crystal litter tray.
3. Remove the waste trap lid by lifting it up until it pops out of the notches on the litter box base. Be sure to pull straight up on the waste trap lid when removing it.
4. Wipe all surfaces on the litter box frame with a cloth or sponge using mild soap and water. Wipe the rake with a sponge or soft brush. **DO NOT use bleach or chemicals to clean as they can act as a repellent to your cat.**
5. Clean the detection sensors on the interior sides of the litter box frame to make sure they are not blocked.
6. Thoroughly dry all parts before reassembling the litter box.
7. Replace the waste trap lid, and install a new litter tray.

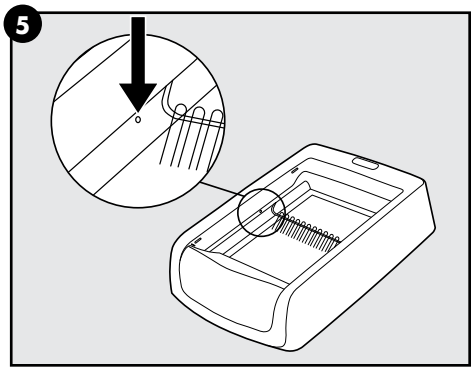

Troubleshooting

The answers to these questions should help you solve any problems you have with your PetSafe® ScoopFree® Smart Self Cleaning Litter Box. If they do not, please contact our Customer Care Center at +1 (800) 732-2677 or visit our website at www.petsafe.com.

TROUBLESHOOTING	
Cannot complete the on-boarding process due to the steps not finalizing.	• Close out of the app completely, making sure that the app is closed in the background as well. Then reopen the app and proceed as usual. • Unplug the litter box, wait 10 seconds, and plug it back in. Close out of the app and reopen it once the litter box is plugged back in. If necessary, reset the Wi-Fi as well by holding down the Wi-Fi button on the litter box for 10 seconds.
The manual rake button LED light changes from blue with red flashes to solid red after pressing the manual rake button.	• Check for obstructions around the rake, and remove them if necessary. • Make sure the magnets on the waste trap lid are properly attached to the metal tabs on the litter tray. • Check to see if the detection sensors are dirty or obstructed, and clean them if necessary. • Check if the waste trap is full. If so, change the litter tray. • Ensure the litter is evenly distributed, and never add extra litter. • Unplug the litter box, wait 10 seconds and plug it back in. The rake should return to home position, and the LED light should be solid blue. • If the above troubleshooting tips do not fix the issue, call our Customer Care Center.
The magnets on the waste trap cover do not attach to the litter tray.	• The waste trap lid may not be properly installed. • Press down on the waste trap lid or lift the waste trap on the litter tray until you hear a "click," indicating that the magnets have attached to the tray.
The litter box frame is not level on the litter tray.	The litter box should rest on the litter tray when installed, not on the floor. Make sure the litter box is completely level on the litter tray.

Customer Care International

USA & Canada — Tel: +1 (800) 732-2677 — Monday–Friday 8 AM–8 PM, Saturday 9 AM–5 PM

Australia — Tel: 1800 786 608 — Monday–Friday 8:30 AM–5 PM

New Zealand — Tel: 0800 543 054 — Monday–Friday 10:30 AM–7 PM

Replacement Parts and Accessories

PetSafe® ScoopFree® Disposable Crystal Litter Trays or other replacement parts and accessories for your PetSafe® ScoopFree® Smart Self-Cleaning Litter Box can be purchased at pet retailers, by visiting www.petsafe.com or by contacting our Customer Care Center at +1 (800) 732-2677. You can sign up for a crystal litter tray home delivery subscription service on our website or by contacting our Customer Care Center. With a subscription service, crystal litter trays will automatically be delivered to your door as frequently as you choose. Visit www.petsafe.com for more information.

Part Number	Description
ZAC00-16815	PetSafe® Cat Litter Mat, Medium
ZAC00-16816	PetSafe® Cat Litter Mat, Large
PAC00-16810	PetSafe® ScoopFree® Privacy Cover
PAC00-17007	PetSafe® ScoopFree® Top-Entry Cover
PAC00-14229	PetSafe® ScoopFree® Original Scent Blue Crystal Litter Trays- 1-Pack
PAC00-14231	PetSafe® ScoopFree® Original Scent Blue Crystal Litter Trays- 3-Pack
PAC00-14377	PetSafe® ScoopFree® Original Scent Blue Crystal Litter Trays- 6-Pack
PAC00-15431	PetSafe® ScoopFree® Lavender Crystal Litter Tray- 1-Pack
PAC00-16689	PetSafe® ScoopFree® Lavender Crystal Litter Trays- 3-Pack
PAC00-15654	PetSafe® ScoopFree® Lavender Crystal Litter Tray- 6-Pack
PAC00-14232	PetSafe® ScoopFree® Sensitive Crystal Litter Tray- 1-Pack
PAC00-14234	PetSafe® ScoopFree® Sensitive Crystal Litter Trays- 3-Pack
PAC00-14378	PetSafe® ScoopFree® Sensitive Crystal Litter Trays- 6-Pack
PAC00-17003	PetSafe® ScoopFree® Smart Litter Box Power Adaptor

Terms of Use and Limitation of Liability

1. **Terms of Use**
   The use of this product is subject to your acceptance without modification of the terms, conditions and notices contained with this product. Use of this product implies acceptance of all such terms, conditions, and notices. If you do not wish to accept these terms, conditions, and notices, please return the product, unused, in its original packaging and at your own cost and risk to the relevant Customer Care location together with proof of purchase for a full refund.
2. **Proper Use**
   Proper Use includes, without limitation, reviewing the entire Product Manual and any specific safety information statements. The specific temperament or size/weight of your pet may not be suitable for this product. If you are unsure whether this product is appropriate for your pet, please consult your veterinarian or certified trainer prior to use. For products used with pets where training is desired, Radio Systems Corporation recommends that these training products are not used if your pet is aggressive and accepts no liability for determining suitability in individual cases.
3. **No Unlawful or Prohibited Use**
   This product is designed for use with pets only. This product is not intended to harm, injure or provoke. Using this product in a way that is not intended could result in violation of Federal, State or local laws.
4. **Limitation of Liability**
   In no event shall Radio Systems Corporation or any of its associated companies be liable for (i) any direct, indirect, punitive, incidental, special or consequential damage and/or (ii) any loss or damages whatsoever arising out of or connected with the use or misuse of this product. The Purchaser assumes all risks and liability from the use of this product to the fullest extent permissible by law.
5. **Modification of Terms and Conditions**
   Radio Systems Corporation reserves the right to change the terms, conditions and notices governing this product from time to time. If such changes have been notified to you prior to your use of this product, they shall be binding on you as if incorporated herein.

Compliance

FCC: USA

This device complies with part 15 of the FCC Rules. Operation is subject to the following two conditions: (1) This device may not cause harmful interference, and (2) this device must accept any interference received, including interference that may cause undesired operation.

Note: This equipment has been tested and found to comply with the limits for a Class B digital device, pursuant to part 15 of the FCC Rules. These limits are designed to provide reasonable protection against harmful interference in a residential installation. This equipment generates, uses, and can radiate radio frequency energy and, if not installed and used in accordance with the instructions, may cause harmful interference to radio communications. However, there is no guarantee that interference will not occur in a specific installation. If interference does occur to radio or television reception, which can be determined by turning the equipment off and on, the user is encouraged to try to correct the interference by one or more of the following measures:

- Reorient or relocate the receiving antenna.
- Increase the separation between the equipment and the receiver.
- Connect the equipment to an outlet on a circuit different from that to which the receiver is connected.
- Consult the Customer Care Center.

CAUTION: Modification or changes to this equipment not expressly approved by Radio Systems Corporation may void the user's authority to operate the equipment.

Important Recycling Advice

Please respect the Waste Electrical and Electronic Equipment regulations in your country. This equipment must be recycled. If you no longer require this equipment, do not place it in the normal municipal waste system. Please return it to where it was purchased in order that it can be placed in our recycling system. If this is not possible, please contact the Customer Care Center for further information. For a listing of Customer Care Center telephone numbers, visit our website at www.petsafe.com.

Warranty

One Year Non-Transferable Limited Warranty

This Product has the benefit of a limited manufacturer's warranty. Complete details of the warranty applicable to this Product and its terms can be found at petsafe.com and/or are available by contacting your local Customer Care Center:

Radio Systems Corporation
10427 PetSafe Way
Knoxville, TN 37932 USA.

Radio Systems Corporation
10427 PetSafe Way
Knoxville, TN 37932
+1 (800) 732-2677

petsafe.com

L400-2472/1
©2019 Radio Systems Corporation