V20221135

Sliding Gate Opener
User Manual

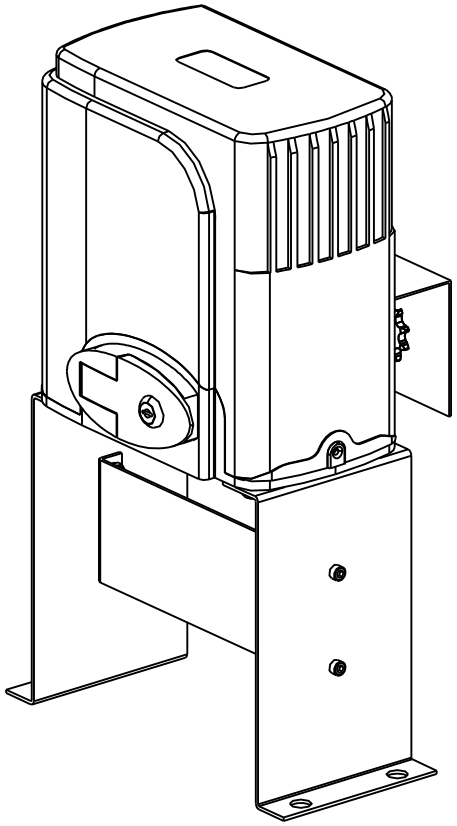

1400LBS / 600KG

Dear users,
Thank you for choosing this product. Please read the manual carefully before assembling and using it. Please do not leave out the manual if you send this product to a third party.

Safety Instruction



Please ensure that the using power voltage matches with the supply voltage of gate opener (AC110V); kids are forbidden to touch the control devices or the remote-control unit.

The remote-control unit is controlled by a single button mode. The indicator light on the remote-control unit will flicker when the button on it is pressed. Main engine and gate can be unlocked by disengagement wrench and the gate can move with manual operation after disengagement.

Please ensure that no one is around the main engine or gate when the switch is operated and it is usually demanded to examine the stability of installation. Please temporarily stop using if the main engine needs repairing or regulation.

The installation and maintenance of the products must be carried out by professionals.

Packing List

No.	Picture	Name	Quantity
1	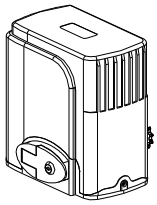	Main engine	1
2	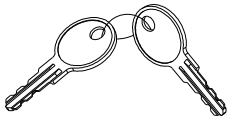	Manual release key	2
3	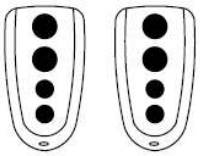	Remote control	2
4	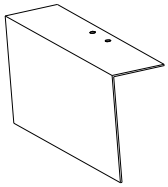	Sprocket cover	1
5	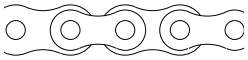	Chain	19.68ft
6		Tie rod	2
7	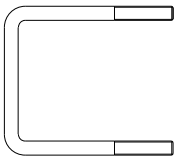	Square screw	4
8	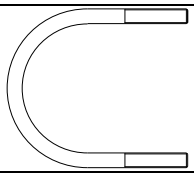	Round screw	4
9	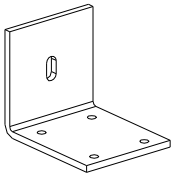	Door connecting plate	2
10	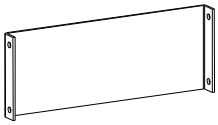	Horizontal mounting plate	1

No.	Picture	Name	Quantity
11	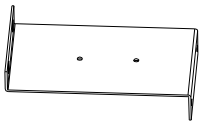	Vertical mounting plate	2
12	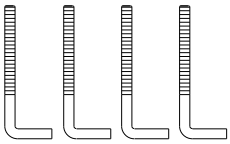	Foundation bolt M8	4
13	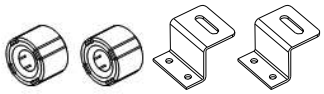	Magnets & block	1
14	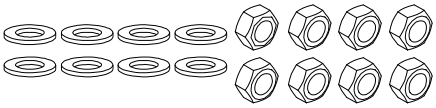	Washer & Nuts	1 bag

Technical parameters

This sliding gate opener is applicable to gate weight less than 600kg (1400Lbs), and length of the sliding gate should be less than 30ft. This gate opener must be installed inside the enclosure or yard for protection.

Maximum weight of gate	600KG (1400Lbs)
Power supply	110V/60Hz
Motor power	280W
Gate moving speed	40ft/min
Remote control distance	⩾30m(10ft)
Remote control mode	Single button mode
Limit switch	Magnetic limit switch
Noise	⩽58dB
Working duty	S2, 15min
Recording of up remote controls	20
Frequency	433.92 MHz
Working temperature	-20°C ~ +70°C
Package weight	34.4Lbs

Size of gate opener

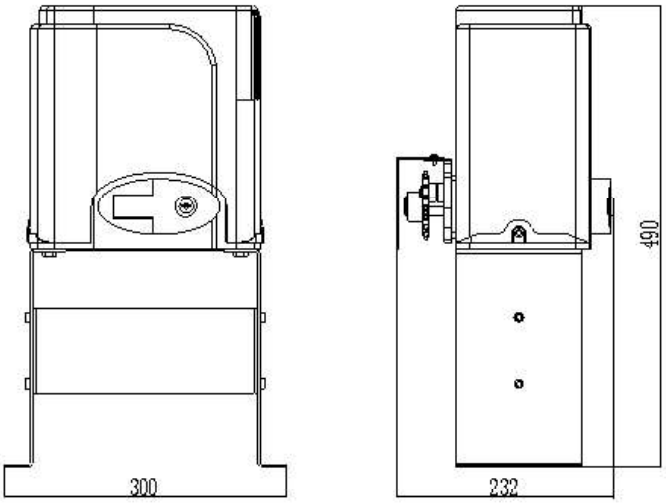

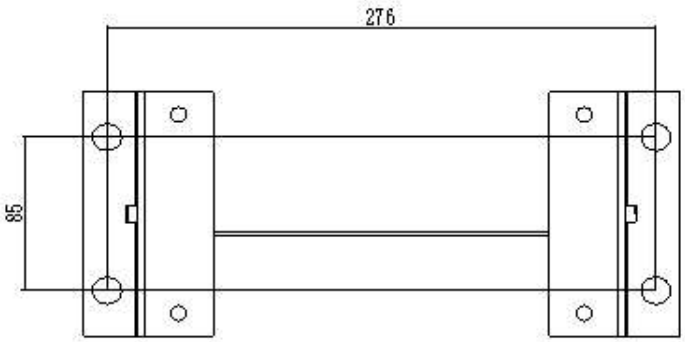

Size of embedded hole

Installation procedures

Preparation work before installation

Please ensure that the sliding gate is correctly installed, the gate rail is horizontal, and the gate can glide back and forth smoothly when moved by hands before installing the gate opener.

Cable installation

Please bury the motor & power cable and controlling cable with PVC tube, and use two PVC tubes to bury (motor & power cable) and (controlling cable) separately, so as to guarantee normal operation of the gate opener and protect the cables from damages.

Concrete pedestal

Please cast a concrete pedestal with the size of 19.69inch x 13.78inch and depth of 7.87inch in advance, so as to firmly install the gate opener. **Please verify whether the distance between the gate and gate opener is suitable before casting the pedestal.**

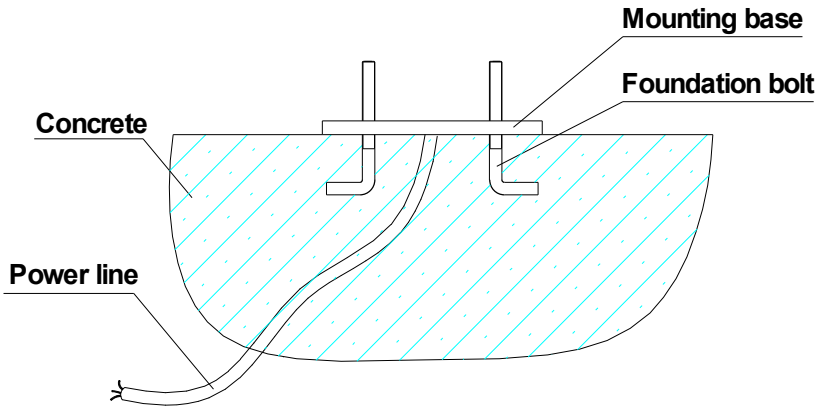

Embedded screws

Main engine installation

a) Dismantle the plastic housing on the main engine before installation and keep relevant fasteners properly;

b) assemble the detachable mounting base;

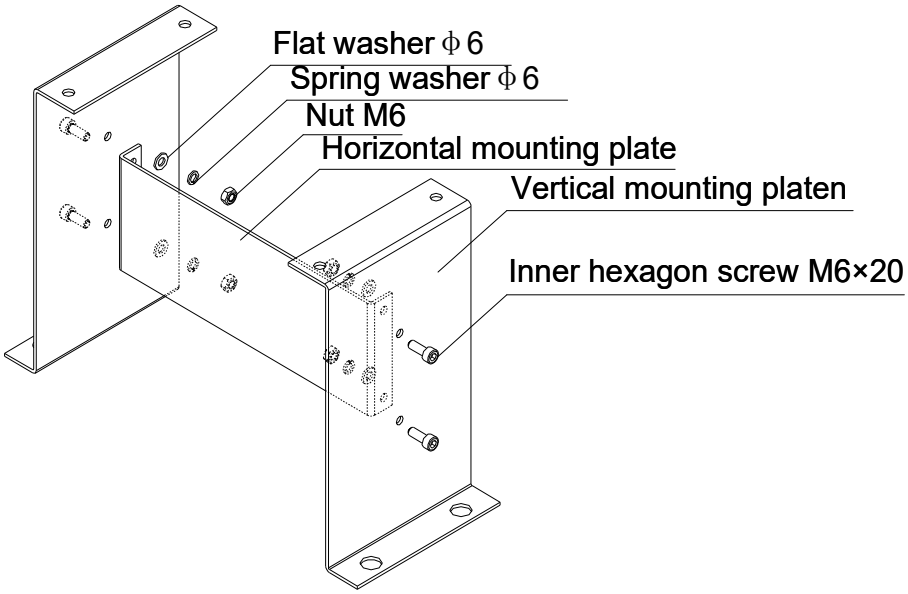

c) Assemble the machine engine to the mounting base;

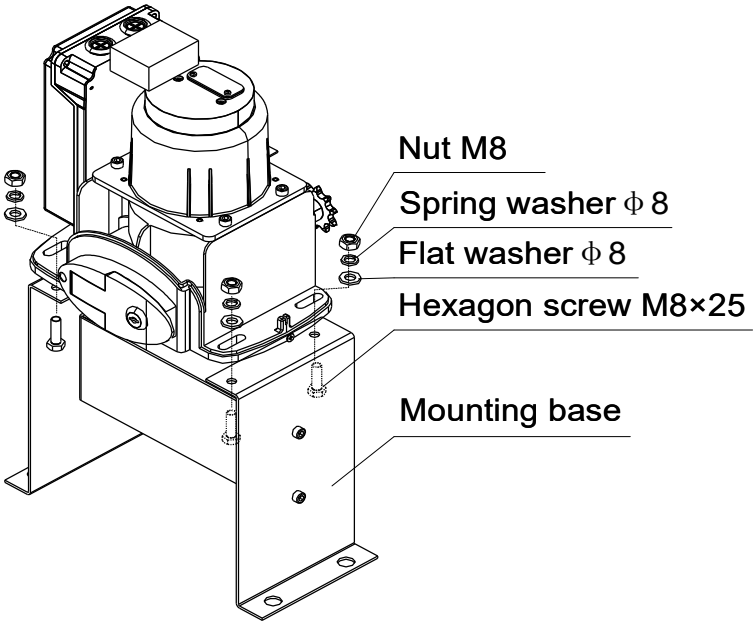

d) Please prepare the power line for connecting mounting plate and main engine (the number of power supply cable core shall not be less than 3 PCS, the sectional area of cable core shall not be lower than 1.5mm² and the length shall be determined by users according to the field situation) due to different installation environments;

e) Please unlock the main engine before installation, the unlock method is: take out the key cover, insert the key, and open the manual release bar till it rotates by 90°. Then turn the output sprocket and the sprocket can be rotated easily;

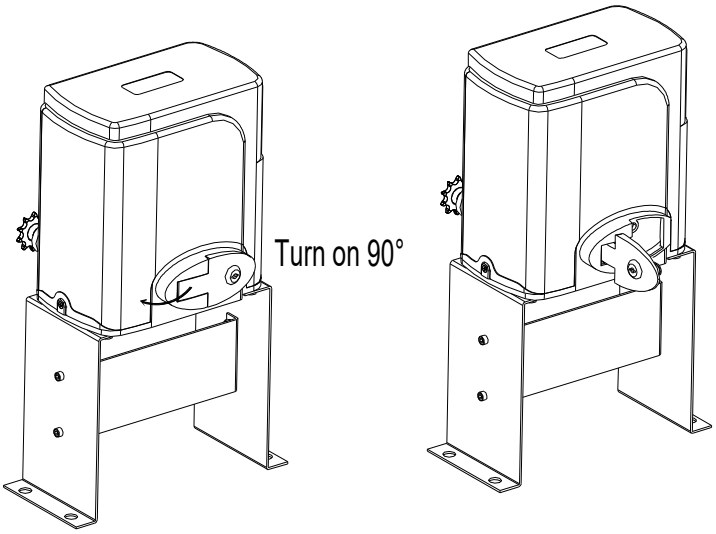

Chain installation

Close the gate; connect the tie rod with chain through chain link; fasten the tie rod to the door connecting plate by washers and nuts . If necessary, the chain can be shortened. If it need to be lengthened, make sure to use same type of chain. (US standard NO.41).

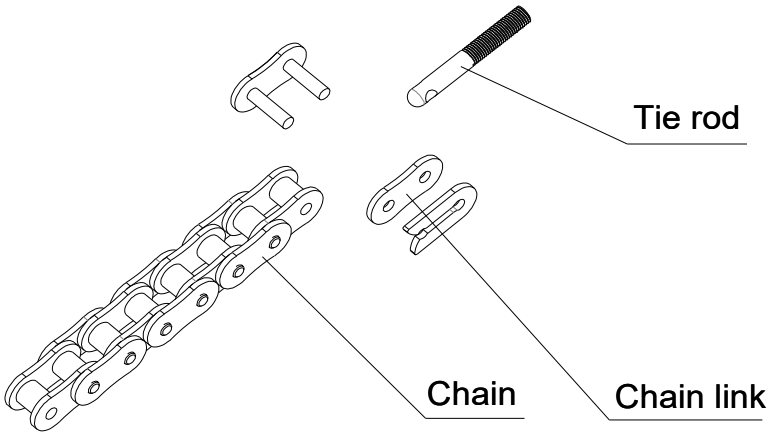

Use the round screws when the door frame is round; Use the square screws when the door frame is square.

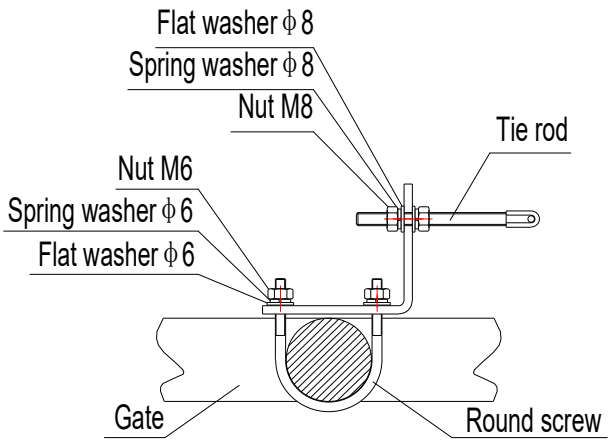

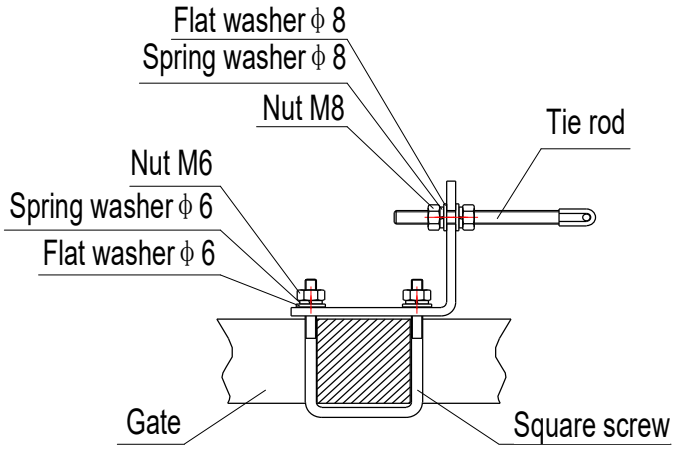

Install the chain and sprocket cover as shown in the figure.

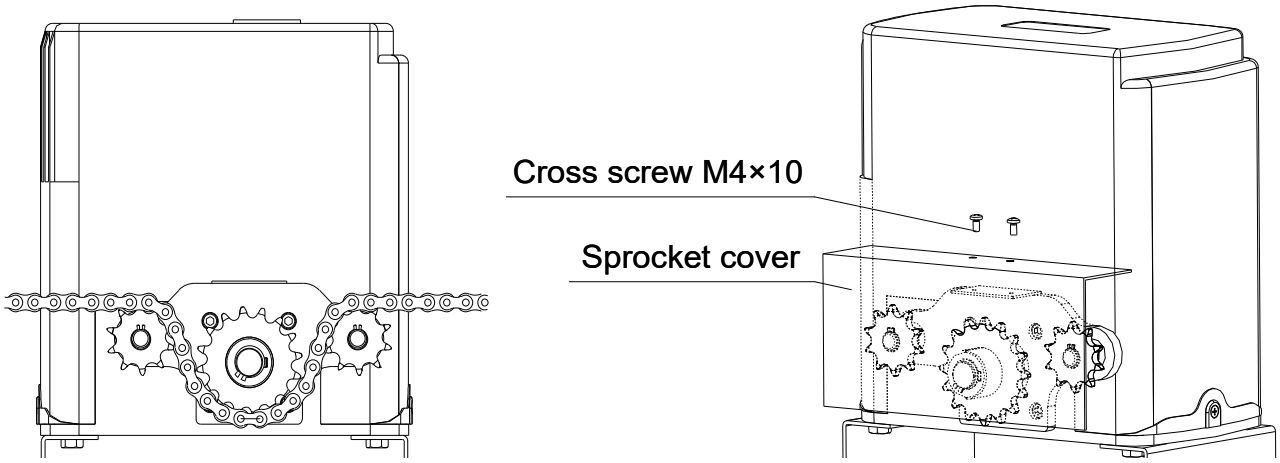

The distance between main engine and chain ends should be at least 11.81inch (30cm):

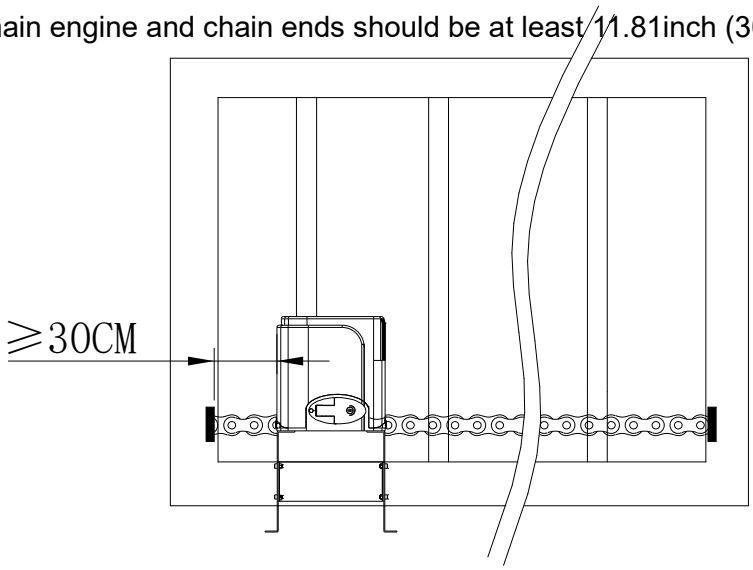

Warnings

·To ensure safety, install safety stop blocks on both ends of the rails to prevent the gate out of the rail. Before installing the main engine, make sure that the safety stop blocks are in place and whether it has the function of preventing the gate from moving out of the rail and out of the safety range.

·Please ensure that the main engine and its components have good mechanical properties, and the gate can operate flexibly when moved by hands before installing the main engine.

·In this product, one control can drive one main engine only, otherwise, the control system will be damaged.

·Earth leakage circuit breaker must be installed where the gate movement can be seen, and the minimum mounting height is 4.92ft to protect it from being touched.

·After installation, please check whether the mechanical property is good or not, whether gate movement after manual unlocking is flexible or not, and whether the infrared sensor (optional) is installed correctly and effectively.

Limit switch adjustment

Use the manual release key to unlock gate opener and manually move the gate to the predetermined position; fix the magnetic limit switch block and close the clutch; testing run after power on, slightly adjust the position of the magnetic limit switch block until the gate reaches the desired open and close limit location.

Installation of magnetic limit switch bock(97mm = 3.82inch,35mm = 1.38inch,20mm = 0.79inch)

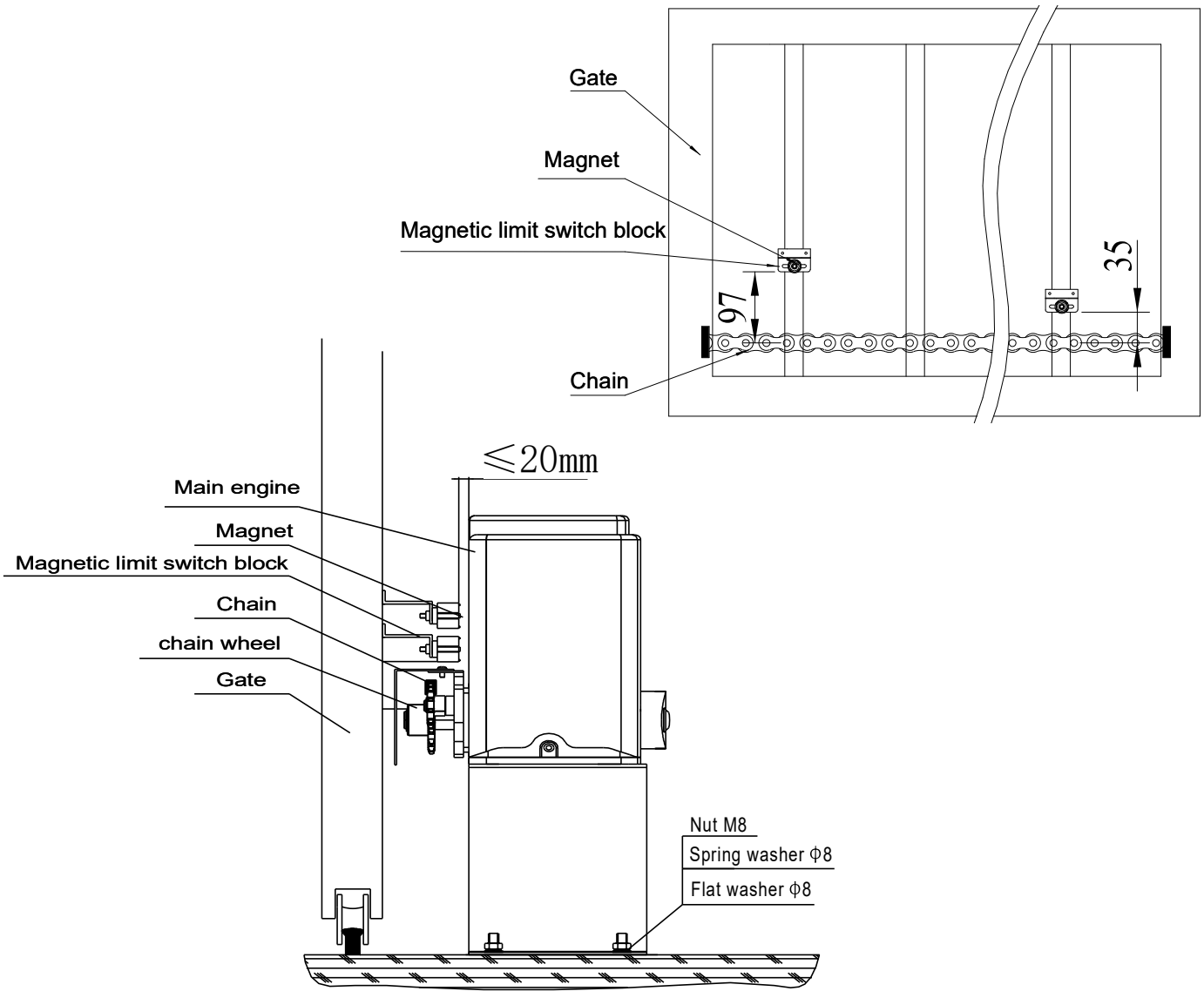

control board

Connections and Indicators Diagram

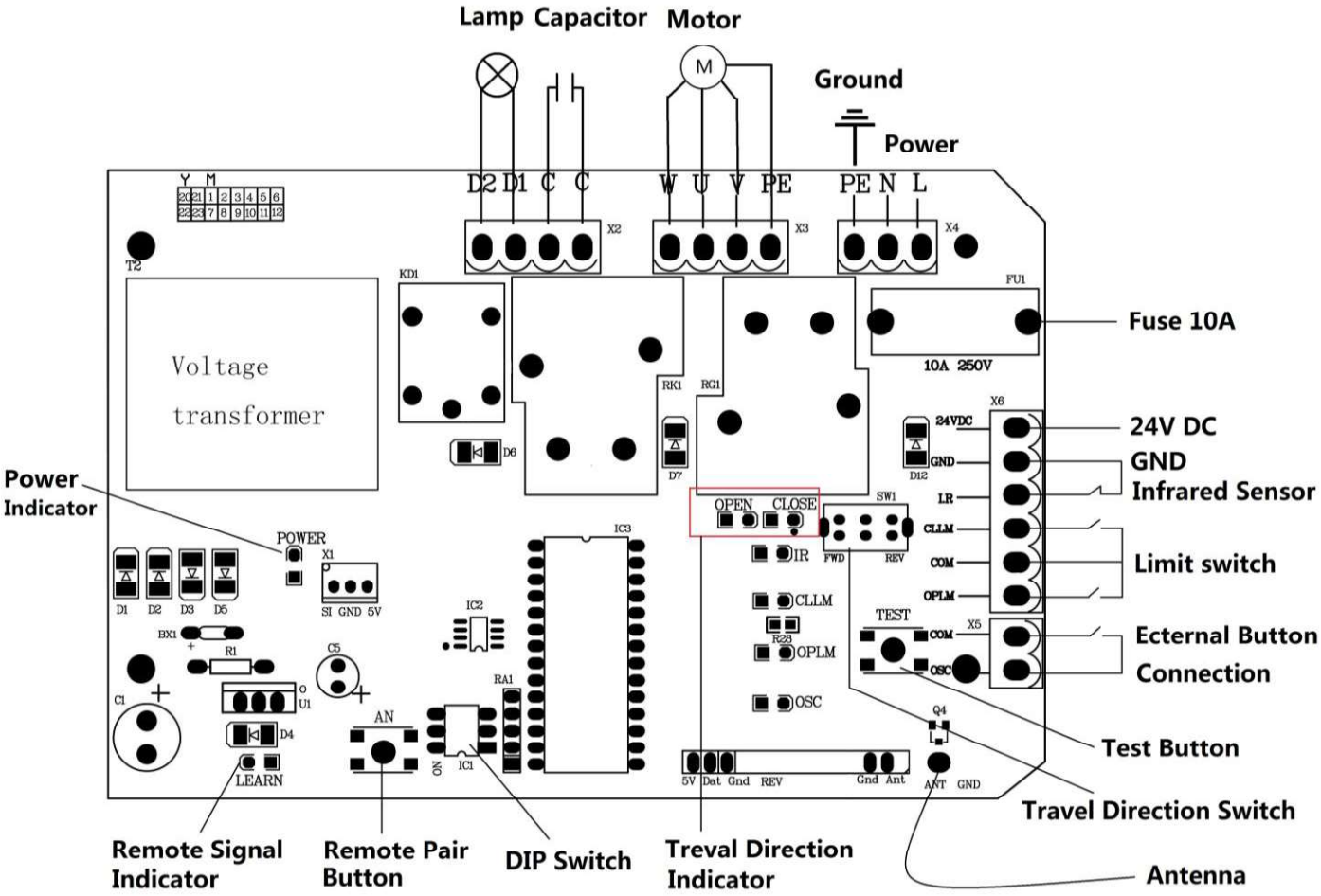

Connection	Interface Terminals
Power	X4:PE, N, L
Caution/Alarm Lamps	X2:D1, D2
External Button	X5: COM, OSC
Photocell Infrared Sensor	X6: 24VDC, GND, I.R

Features

☒ Pair with up to 20 different 433.92 MHz remote controls and with wireless keypads.

☒ Compatible with and easily connected to alarm lamps, external control buttons, and infrared photocell sensors.

☒ Auto-close functionality for improved security.

Gate Opener Installation

Step 1

Ensure your gate can glide back and forth smoothly by hand before installing the gate opener.

Step 2

Toggle the Travel Direction Switch on the control board according to the installation location of your automatic gate opener. Flip the switch to FWD for right-mounted gate openers. Flip the switch to REV for left-mounted gate openers.

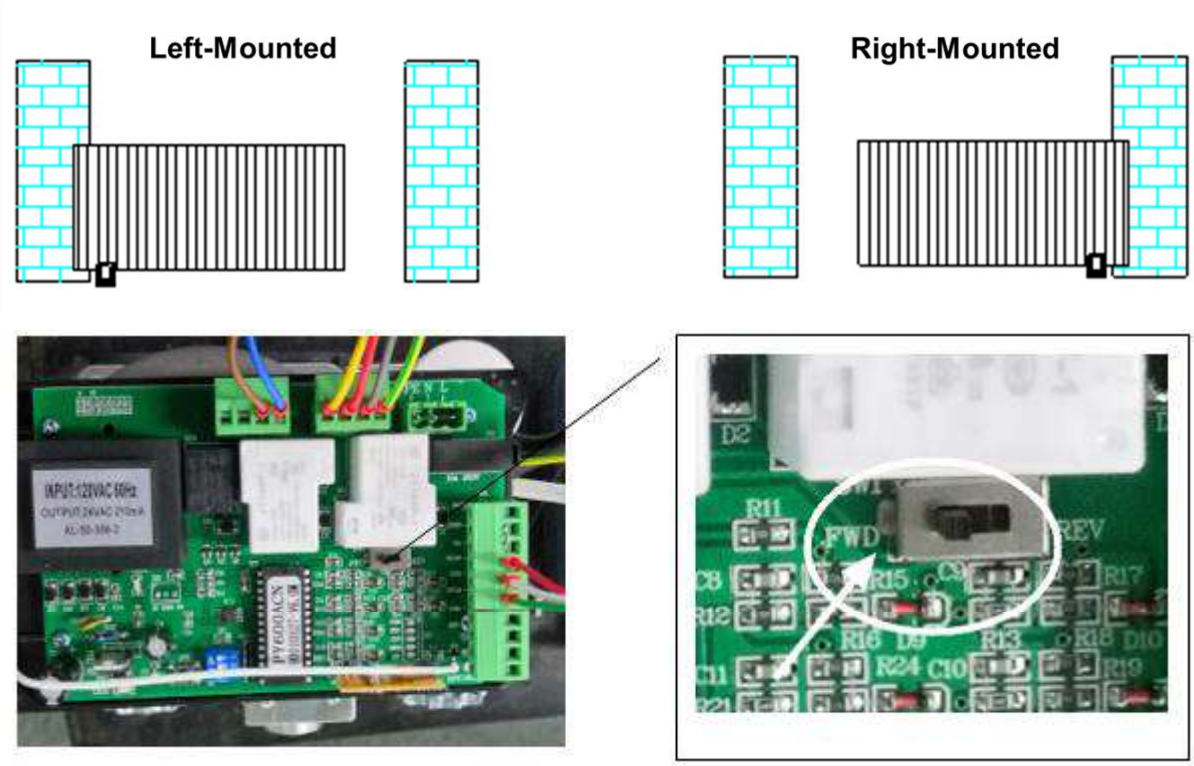

Step 3

Wire the control board to your automatic gate opener and any compatible accessories according to the Connections and Indicators Diagram in the Product Overview section of this manual and the instruction manuals for the other devices.

Step 4

Press the test button, Travel direction indicator (open) will light when the gate is opening; Travel direction indicator (close) will light when the gate is closing.

Remote Control

The included remote control uses single-button mode. Each button on the remote control can pair with one control board. When pressed, the paired button will open the gate if the gate is closed, close the gate if the gate is open, and stop the gate if the gate is traveling.

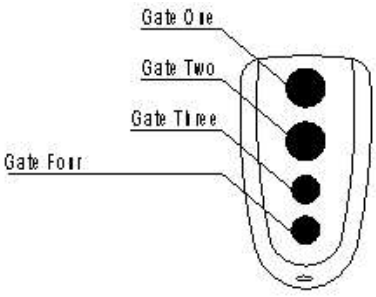

⚠ **CAUTION**: To prevent accidents, **DO NOT** pair one button with two different control boards. The transmitter has been matched to the door opener when it leaves the factory, No need to match again when the product is received.

Remote Control Pairing:

Step 1

Press the Remote Pair Button (AN1) on the control board. The Remote Signal Indicator (LED2) will come on.

Step 2

Press the button on the remote control to be paired. The Remote Signal Indicator will go off.

Step 3

Press the same button the remote control. The Remote Signal Indicator will flash quickly then go off. DONE!

Remove All Paired Remote Controls:

Hold Remote Pair Button (AN1) on the control board until the Remote Signal Indicator (LED2) goes out. DONE!

DIP Switches

The DIP switches on the control board control the external buttons control mode and the auto-close time settings.

Switch 1: External Buttons Settings

ON = external button only can open the gate

OFF = external button can open/stop/close the gate

Switches 2 & 3: Auto-Close Time Settings

Switch Orientations	Auto-Close Time
2 ON 3 OFF	15 seconds
2 OFF 3 ON	30 seconds
2 OFF 3 OFF	45 seconds
2 ON 3 ON	Auto-Close Disabled

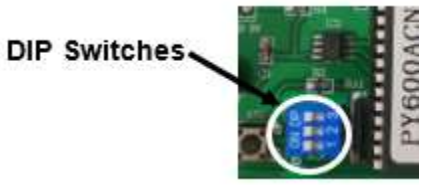

Photocell Infrared Sensor Installation

Step 1

Remove the short wire connecting the I.R and GND interface terminals on the control board.

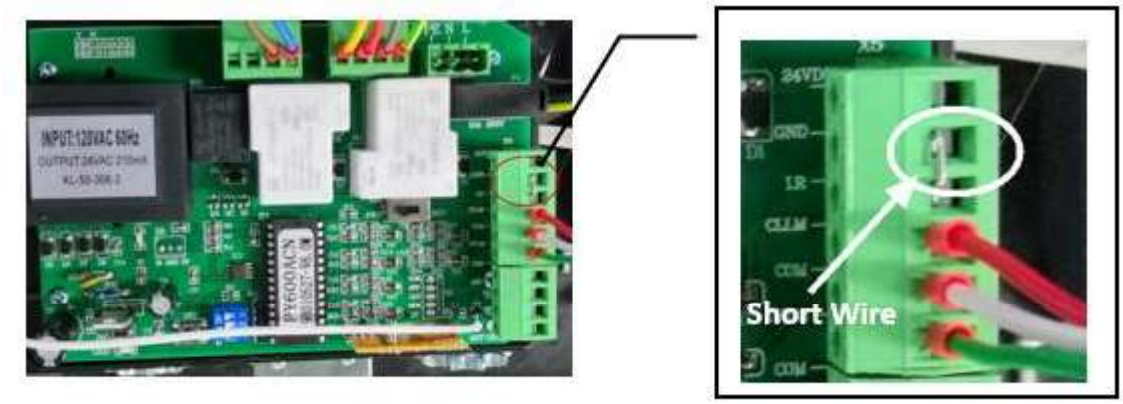

Step 2

Install the photocell infrared sensor on your gate posts according the instructions of your photocell infrared sensor.

Step 3

Connect the sensor to the control board according to the image below.

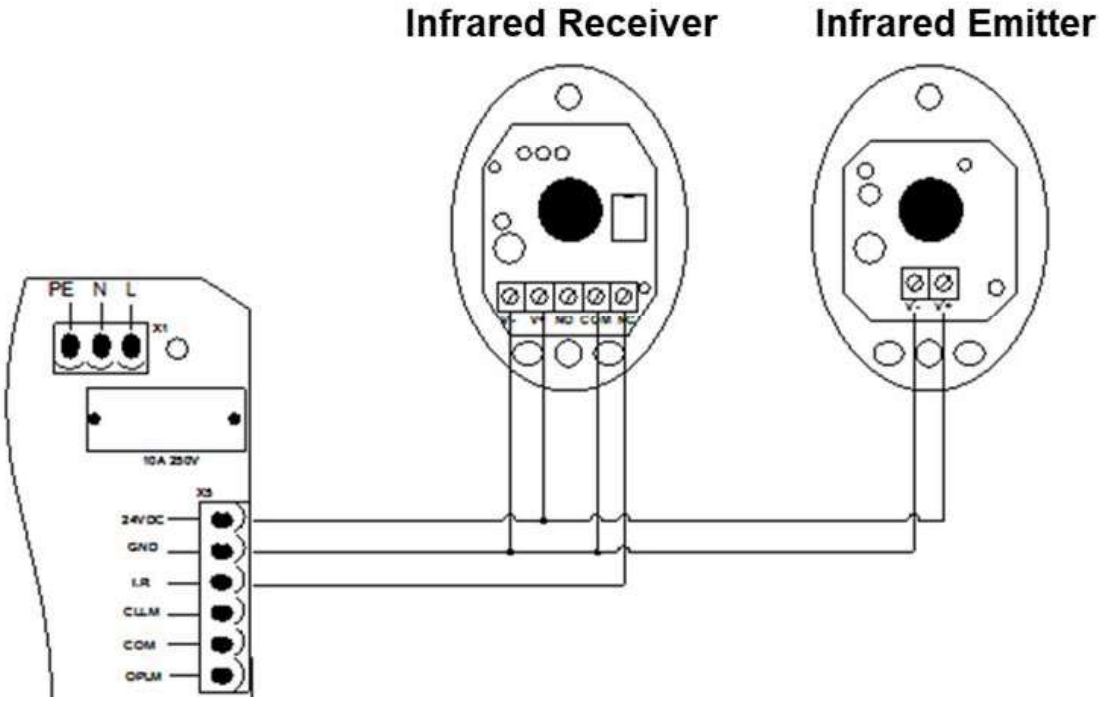

Troubleshooting

Problems	Possible Reasons	Solutions
The gate cannot open or close normally, and LED does not light.	1.The power is off. 2.Fuse is burned. 3.Control board power wiring with problem.	1.Switch on the power supply. 2.Check the fuse (code FU), change the fuse if burnt. 3.Re wiring according to instructions.
The gate can open but cannot close.	1.Photocell wiring with problem. 2.Photocell mounting with problem. 3.Photocell is blocked by objects. 4.Sensitivity of obstacle is too high (Intelligent type). 5.Hall switch parts is damaged (Intelligent type).	1.If not connect photocell, please make sure that the infrared port and GND short circuit; if connect infrared sensor, please make sure the wiring is correct and the photocell is N.C. 2.Make sure that the photocell mounting position can be mutually aligned. 3.Remove the obstacle. 4.Reduce the sensitivity of obstacle. 5.Change hall switch parts.
Remote control doesn't work.	1.Battery level of the remote control is low. 2.Remote control learning is not completed.	1.Change the remote control battery. 2.Re-conduct remote control learning.
Press OPEN, CLOSE button, the gate is not moving, motor has noise.	1.Capacitor is broken. 2.Capacitor is poor connected. 3.Gate moving is not smoothly.	1.Change capacitor. 2.Check the capacitor wiring. 3.According to the actual situation to adjust the motor or the gate.
Not stop at the limit position when opening / closing.	1. The limit direction is wrong. 2. The mounting of magnetic limit switch with problem.	1.Check whether the limit switch wiring is consistent with the actual direction of operation. 2. Check whether the distance between magnetic limit switch and motor, and the height of the magnetic limit switch can reach up the mounting requirement.
Leakage switch tripped.	Power supply line short circuit or motor line short circuit.	Check wiring.
Remote control working distance is too short.	Signal is blocked.	Connect external receiver antenna, 1.5 meters above ground.

Contact Us

Thank you for choosing our products! If you have any questions or comments, contact us at **help@cs-supportpro.com** and we'll resolve your issue ASAP!

For a .pdf copy of the latest version of these instructions, use the appropriate app on your smartphone to scan the QR code to the right.