ELECTRIC COOKTOP

COS-304TBECC
COS-365TBECC

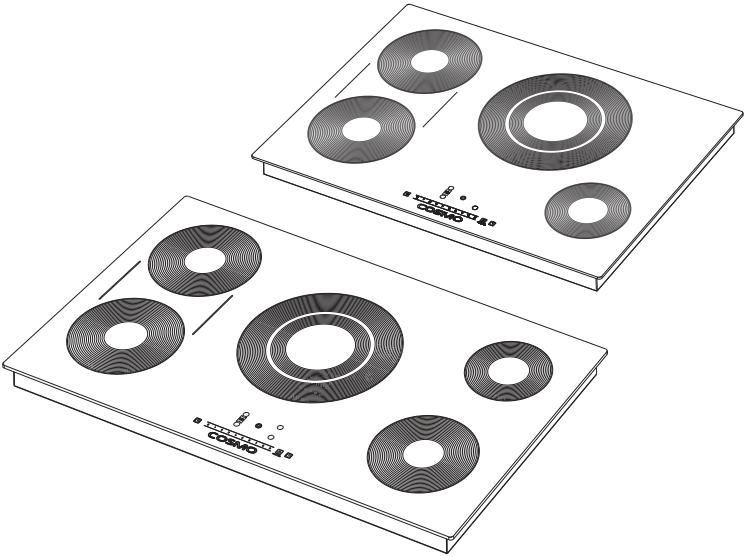

DROP-IN COOKTOP

USER MANUAL & INSTALLATION INSTRUCTIONS

IMPORTANT: READ AND SAVE THESE INSTRUCTIONS.
FOR RESIDENTIAL USE ONLY.

INSTALLER: PLEASE LEAVE THESE INSTRUCTIONS WITH THIS UNIT FOR THE OWNER.

OWNER: PLEASE RETAIN THESE INSTRUCTIONS FOR FUTURE REFERENCE.

Rev.23.03

THANK YOU FOR YOUR PURCHASE

Thank you for your purchase. We know that you have many brands and products to choose from and we are honored to know that you have decided to take one of our products into your home and hope that you enjoy it.

COSMO Appliances are designed according to the strictest safety and performance standard for the North American market. We follow the most advanced manufacturing philosophy. Each appliance leaves the factory after thorough quality inspection and testing. Our distributors and our service partners are ready to answer any questions you may have regarding how to install, use and care for your products. We hope that this manual will help you learn to use the product in the safest and most effective manner.

Before using this product, please read through this manual carefully. Keep this user manual in a safe place for future reference. Please ensure that other persons using this product are familiar with these instructions as well.

If you have any questions or concerns, please contact the dealer from whom you purchased the product, or contact our Customer Support at:

1-888-784-3108

Reach us online at:

www.cosmoappliances.com

TABLE OF CONTENTS

COOKTOP SAFETY 4

Important Safety Instructions 6

INSTALLATION REQUIREMENTS 11

Tools and Parts 11

Location Requirements 12

Product Dimensions 13

Cutout Dimensions 14

Clearances 15

Electrical Requirements 17

INSTALLATION INSTRUCTIONS 19

Preparation 19

Install Clamping Brackets 20

Install Cooktop 22

Electrical Connection 23

Complete Installation 26

OVERVIEW 28

Cooktop Layout 28

Control Panel 29

FEATURES 30

Timer 30

Lock 31

OPERATION 32

Before Using the Cooktop 32

Cooking Areas 34

Hot Surface Indicator 35

Using the Cooktop Elements 35

Using the Proper Cookware 37

COOKTOP CARE AND MAINTENANCE 39

Cleaning 39

TROUBLESHOOTING 42

LIMITED WARRANTY 44

COOKTOP SAFETY

READ ALL INSTRUCTIONS BEFORE USING THE APPLIANCE

Your safety and the safety of others are very important.

We have provided many important safety messages in this manual and on your appliance. Always read and obey all safety messages.



This is the safety alert symbol.

This symbol alerts you to potential hazards that can kill or hurt you and others.

All safety messages will follow the safety alert symbol and either the word "WARNING" or "CAUTION." These words mean:

⚠ WARNING You can be killed or seriously injured if you don't follow instructions.

⚠ CAUTION A potentially hazardous situation which, if not avoided, could result in minor or moderate injury.

All safety messages will tell you what the potential hazard is, tell you how to reduce the chance of injury, and tell you what can happen if the instructions are not followed.

California Proposition 65 Warning

⚠ WARNING:

Cancer and Reproductive Harm - www.P65Warnings.ca.gov.

⚠ WARNING

- This appliance is intended for normal residential use. It is not approved for commercial use, outdoor installation, or any other application not specifically allowed by this manual.
- This appliance requires connection to a 3-prong or 4-prong, 240VAC single-phase (split-phase), 60Hz grounded electrical source. When installed, appliance must be electrically grounded in accordance with local codes or, in the absence of local codes, with the National Electrical Code, NFPA 70 or CSA Standards C22.1-94, or the Canadian Electrical Code, Part 1 and C22.2.
- **ATTENTION INSTALLER:** All cooktops must be hard wired (direct wired) into an approved junction box. A "plug and receptacle" is not permitted on these products.
- Proper installation is the responsibility of the installer. Any adjustment and service should be performed only by qualified cooktop installers or service technicians.
- Product failure due to improper installation is not covered under warranty.

IMPORTANT SAFETY INSTRUCTIONS

WARNING: To reduce the risk of fire, electrical shock, injury to persons, or damage when using the cooktop, follow basic precautions, including the following:

- For Personal Safety, remove house fuse or open circuit breaker before beginning installation. Failure to do so could result in serious injury or death.
- **ATTENTION INSTALLER** - All cooktops must be hard wired (direct wired) into an approved junction box. A "plug and receptacle" is not permitted on these products.
- Proper installation is the responsibility of the installer and product failure due to improper installation is NOT covered under warranty.
- **WARNING:** Installations with Aluminum House Wiring Require Attention:
  - Improper connection of Aluminum house wiring to appliance copper leads can result in an electrical hazard or fire. Use only connectors designed for joining copper to aluminum and follow the manufacturer's recommend procedure closely.
  - Aluminum to Copper wiring connections must conform with the National Electrical code, local codes and industry-accepted wiring practices.
  - If an anti-oxidant compound is added to the wiring connectors, the compound should be UL-Listed and suitable for the application materials, voltage and temperature.
  - Connectors for joining Aluminum and Copper wiring may be larger in size than standard connectors. It is recommended to use a double gang, or larger, electrical box to enclose the connectors joining Aluminum and Copper wiring.
- Use this appliance only for its intended purpose as described in this manual.
- Never use your appliance for warming or heating the room.

READ AND SAVE THESE INSTRUCTIONS

IMPORTANT SAFETY INSTRUCTIONS

- Be sure your appliance is properly installed and grounded by a qualified technician.
- To eliminate the risk of burns or fire due to reaching over heated surface elements, cabinet storage located above the surface units should be avoided. If cabinet storage space is to be provided, the risk can be reduced by installing a range hood that projects horizontally a minimum of 5" beyond the bottom of the cabinets. Cabinet installation above the cooktop may be no deeper than 13".
- This appliance is not intended for use by people (including children) whose physical, sensory or mental capacities are impaired or who lack the necessary experience or knowledge/expertise to do so, unless such persons are supervised or are trained to operate the appliance by a person who accepts responsibility for their safety.
- **CAUTION:** Do not store items of interest to children in cabinets above a cooktop – children climbing on the cooktop to reach items could be seriously injured.
- Do Not Leave Children Alone – Children should not be left alone or unattended in area where cooktop is in use. They should never be allowed to sit or stand on any part of the cooktop.
- User Servicing – Do not repair or replace any part of the cooktop unless specifically recommended in the manual. All other servicing should be referred to a qualified technician.
- Before performing any service, unplug the cooktop or disconnect the power supply at the household distribution panel by removing the fuse or switching off the circuit breaker.
- Storage on Cooktop – Flammable materials should not be stored near surface units.
- Do Not Use Water on Grease Fires – Smother fire or flame or use dry chemical or foam-type extinguisher.
- Use Only Dry Potholders – Moist or damp potholders on hot surfaces may result in burns from steam. Do not let potholder touch hot heating elements. Do not use a towel or other bulky cloth.

READ AND SAVE THESE INSTRUCTIONS

IMPORTANT SAFETY INSTRUCTIONS

- DO NOT TOUCH SURFACE UNITS OR AREAS NEAR UNITS – Surface units may be hot even though they are dark in color. Areas near surface units may become hot enough to cause burns. During and after use, do not touch, or let clothing or other flammable materials contact surface units or areas near units until they have had sufficient time to cool. Among these areas are the coil elements, the cooktop, and surfaces facing the cooktop.
- Do Not Cook on Broken Cooktop – If cooktop should break, cleaning solutions and spillovers may penetrate the broken cooktop and create a risk of electric shock. Turn off the device to avoid the possibility of electric shock. Contact a qualified technician immediately.
- Avoid scratching or impacting cooktops, or control panels. The cooktop can be scratched with items such as knives, sharp instruments, rings or other jewelry, and rivets on clothing. Doing so may lead to glass breakage.
- If the power supply cord gets damaged, have it replaced by the manufacturer, the latter's service agent or by qualified personnel in order to avoid danger.
- Never Leave Surface Units Unattended at High Heat Settings – Boilover causes smoking and greasy spillovers that may ignite.
- Do Not Heat Unopened Food Containers – Build-up of pressure may cause container to burst and result in injury.
- Wear Proper Apparel – Loose-fitting or hanging garments should never be worn while using the appliance.
- Use Proper Pan Size – This appliance is equipped with one or more surface units of different size. Select utensils having flat bottoms large enough to cover the surface unit heating element. The use of undersized utensils will expose a portion of the heating element to direct contact and may result in ignition of clothing. Proper relationship of utensil to heating element will also improve efficiency.

READ AND SAVE THESE INSTRUCTIONS

IMPORTANT SAFETY INSTRUCTIONS

- Glazed Cooking Utensils – Only certain types of glass, glass/ceramic, ceramic, earthenware, or other glazed utensils are suitable for cooktop service without breaking due to the sudden change in temperature.
- Utensil Handles Should Be Turned Inward and Not Extend Over Adjacent Surface Units – To reduce the risk of burns, ignition of flammable materials, and spillage due to unintentional contact with the utensil, the handle of a utensil should be positioned so that it is turned inward, and does not extend over adjacent surface units.
- Metal objects, such as knives, forks, spoons and lids should not be left on the grill's cooking surface as they may get hot.
- Do not place or store items that can melt or catch fire on the glass cooktop, even when it is not being used. If the cooktop is inadvertently turned on, they may ignite. Heat from the cooktop after it is turned off may cause them to ignite also.
- Maintenance – Keep cooktop area clear and free from combustible materials, gasoline, and other flammable vapors and liquids.
- Do not let cooking grease or other flammable materials accumulate in or near the cooktop. Grease on the cooktop may ignite.
- Clean Cooktop With Caution – If a wet sponge or cloth is used to wipe spills on a hot cooking area, be careful to avoid steam burn. Some cleaners can produce noxious fumes if applied to a hot surface.
- Use care when touching the cooktop. The glass surface of the cooktop will retain heat after the controls have been turned off.
- Clean Only Parts Listed in Manual.
- Do not use replacement parts that have not been recommended by the manufacturer (e.g. parts made at home using a 3D printer).

READ AND SAVE THESE INSTRUCTIONS

IMPORTANT SAFETY INSTRUCTIONS

- Proper Disposal of Your Appliance – Dispose of or recycle your appliance in accordance with Federal and Local Regulations. Contact your local authorities for the environmentally safe disposal or recycling of your appliance.

For units with ventilating hood –

- Clean Ventilating Hoods Frequently – Grease should not be allowed to accumulate on hood or filter.
- When flaming foods under the vent hood, turn the fan on.

READ AND SAVE THESE INSTRUCTIONS

INSTALLATION REQUIREMENTS

TOOLS AND PARTS

Gather the required tools and parts before starting installation. Read and follow the instructions provided with any tools listed here.

Tools Needed

- Tape measure
- Phillips screwdriver
- Marker or pencil
- Drill and drill bit (for clamping bracket installation on wooden countertops)
- Heavy-duty double-sided adhesive tape and silicone (for clamping bracket installation on granite and marble countertops)
- Safety glasses
- Gloves

Parts Needed

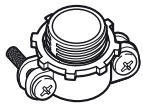

UL Listed or CSA Approved Conduit Connector

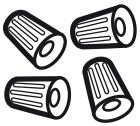

UL Listed or CSA Approved Wire Connector

Parts Supplied

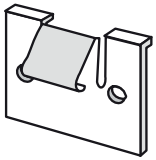

Clamping Brackets (4)



Clamping Screws (8)

LOCATION REQUIREMENTS

IMPORTANT: Observe all governing codes and ordinances.

- This cooktop is for indoor household use only.
- It is the installer's responsibility to comply with installation clearances specified on the model/serial/rating plate. The model/serial/rating plate is located on the underside of the cooktop base.
- The cooktop must be installed in a level countertop.
- The cooktop should be installed in a location away from strong draft areas, such as windows, doors, and strong heating vents or fans.
- The cooktop should be located for convenient use in the kitchen.
- To eliminate the risk of burns or fire by reaching over the heated surface units, cabinet storage space located above the surface units should be avoided. If cabinet storage is to be provided, the risk can be reduced by installing a range hood that projects horizontally a minimum of 5" (12.7 cm) beyond the bottom of the cabinets.
- For cooktop installation in a solid surface material such as granite, quartz or any other natural or synthetic solid surface, it is recommended that the cutout be prepared by a professional cabinet or countertop installer. Cooktop cutouts in wood or wood-laminate countertops may be able to be prepared using a saber saw and electric drill.
- An approved built-in under counter oven may be installed below the cooktop. Refer to oven manufacturer’s installation instructions for appropriate clearances, dimensions, and cutout dimensions.
- A ventilation hood may be installed above the cooktop. See the ventilation hood installation instructions for the appropriate dimensions and clearances.
- Grounded electrical supply is required. See "Electrical Requirements" section.

IMPORTANT: To avoid damage to your cabinets, check with your builder or cabinet supplier to make sure that the materials used will not discolor, delaminate, or sustain other damage.

PRODUCT DIMENSIONS

Dimensions given are maximum dimensions across all models.

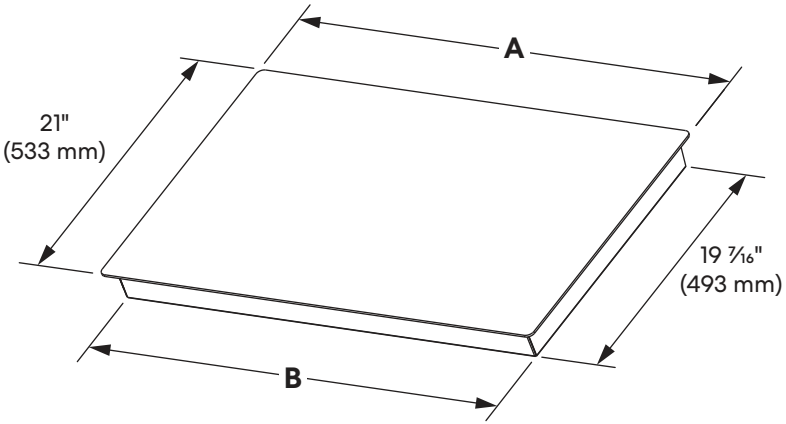

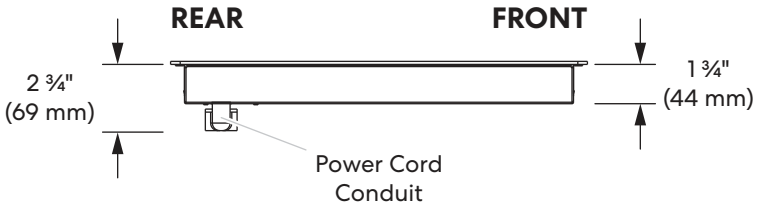

Model	A	B
	Surface Width	Base Width
COS-304TBECC (30")	30" (762 mm)	28 7/16" (722 mm)
COS-365TBECC (36")	36" (915 mm)	34 7/16" (875 mm)

NOTE:

- Power cord is located at the rear right bottom of the cooktop.
- Length of power cord is approximately 47 1/4" (120 cm).

CUTOUT DIMENSIONS

IMPORTANT: To avoid damage to your cabinets, check with your builder or cabinet supplier to make sure that the materials used will not discolor, delaminate or sustain other damage.

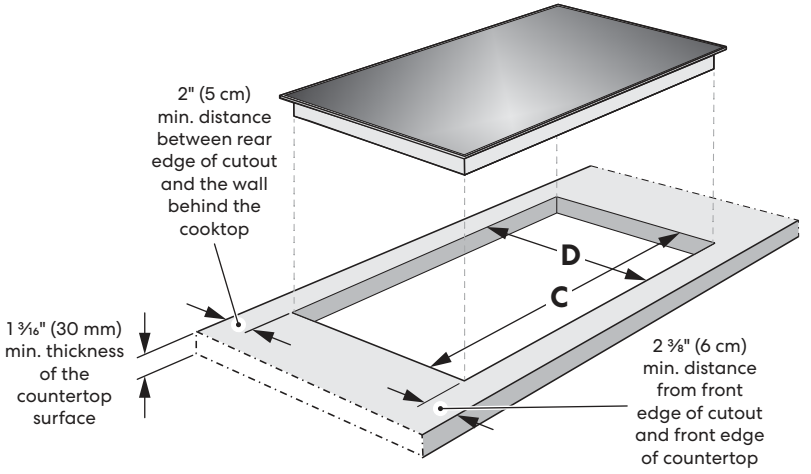

Model	C	
	Cutout Width	Recommended Cutout Width
COS-304TBECC (30")	28 3⁄4" – 28 13⁄16" (730 – 732 mm)	28 3⁄4" (730 mm)
COS-365TBECC (36")	34 3⁄4" – 34 13⁄16" (883 – 885 mm)	34 13⁄16" (885 mm)

Model	D	
	Cutout Depth	Recommended Cutout Depth
COS-304TBECC (30") COS-365TBECC (36")	19 1⁄16" – 19 13⁄16" (500 – 503 mm)	19 13⁄16" (503 mm)

NOTE:

- For cooktop installation in a solid surface material such as granite, quartz or any other natural or synthetic solid surface, it is recommended that the cutout be prepared by a professional cabinet or countertop installer. Cooktop cutouts in wood or wood-laminate countertops may be able to be prepared using a saber saw and electric drill.
- The countertop surface thickness should be at least 1 3⁄16" (30 mm).

CLEARANCES

IMPORTANT: If installing the cooktop in combination with a range hood, microwave hood combination, or built-in under counter oven, follow their specific product installation instructions for dimensional clearances above the cooktop surface or below the cooktop.

GIVEN DIMENSIONS ARE MINIMUM CLEARANCES.

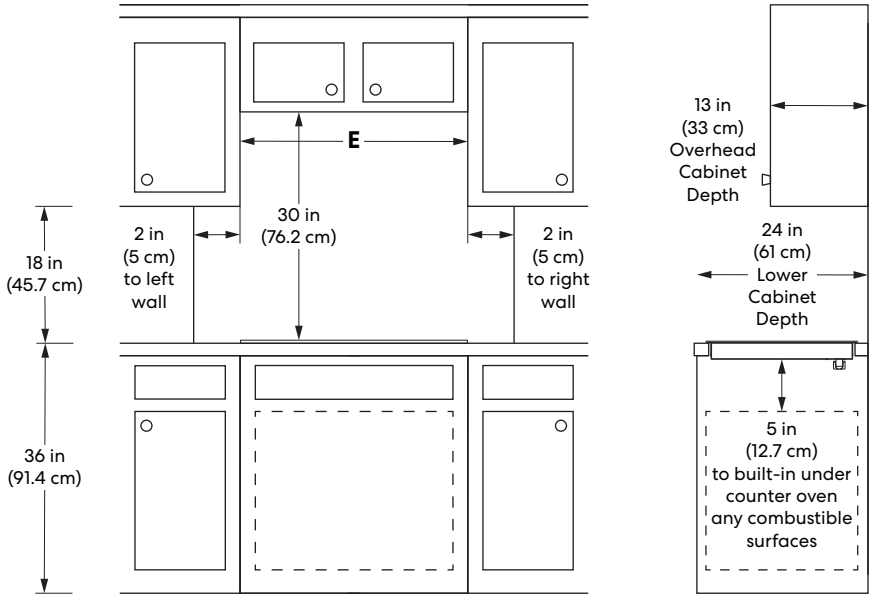

Model	E
	Overhead Cabinet Horizontal Clearance
COS-304TBECC (30")	30" (76.2 cm)
COS-365TBECC (36")	36" (91.4 cm)

NOTE:

- 30" (76.2 cm) minimum clearance between top of cooktop platform and bottom of the overhead cabinet.
- 18" (45.7 cm) minimum clearance from countertop to underside of nearest cabinets on both sides of cooktop.
- 2 ⅜" (6 cm) minimum clearance from front edge of cutout and front edge of countertop.
- 2" (5 cm) minimum clearance between rear edge of cutout and the wall behind the cooktop.
- 2" (5 cm) minimum clearance from cutout to nearest vertical wall or cabinet on left or right side of the cooktop below the 18" (45.7 cm) minimum clearance height.
- 5" (12.7 cm) minimum vertical clearance from the cooktop bottom to built-in under counter oven, microwave, warming drawer, or any combustible surfaces, such as a cabinet drawer.

ELECTRICAL REQUIREMENTS

⚠ WARNING



ELECTRICAL SHOCK HAZARD

- Disconnect power before servicing.
- Use 8 gauge copper wire.
- Electrically ground cooktop.
- Failure to follow these instructions can result in death, fire, or electrical shock.

If codes permit and a separate ground wire is used, it is recommended that a qualified electrical installer determine that the ground path and wire gauge are in accordance with local codes.

Check with a qualified electrical installer if you are not sure the cooktop is properly grounded.

Make sure that the electrical connection, grounding, and wire size are adequate and in conformance with all local codes and ordinances, or in their absence, with the National Electrical Code, ANSI/NFPA No. 70 - latest edition in the United States, or with CSA Standard C22.1, Canadian Electrical Code, Part 1 in Canada.

A copy of the above code standards can be obtained from:

- National Fire Protection Association
  1 Batterymarch Park
  Quincy, MA 02169
- CSA International
  8501 East Pleasant Valley Road
  Cleveland, OH 44131-5575

Before You Make the Electrical Connection:

To properly install your cooktop, you must determine the type of electrical connection you will be using and follow the instructions provided for it here.

- This appliance must be supplied with the proper voltage and frequency, and connected to an individual, properly grounded, 50 amp (minimum) branch circuit protected by a circuit breaker or time-delay fuse.
- The cooktop is rated for 240V. The model/serial/rating plate is located on the metal cabinet underneath the cooktop.
- The cooktop is equipped with a 3-wire power cord.
- A single-phase (split-phase), 3-wire or 4-wire, AC 240 Volt 60 hertz electrical system is required. It is the personal responsibility of the cooktop owner to provide the correct electrical service for this cooktop.
- The cooktop should be connected directly to the junction box through flexible, armored or nonmetallic sheathed, copper cable. The flexible, armored cable extending from the fuse box or circuit breaker box should be connected directly to the junction box.
- Locate the junction box to allow as much slack as possible between the junction box and the cooktop so that the cooktop can be moved if servicing becomes necessary in the future.
- Do not cut the conduit. Use the length of conduit provided.
- A UL listed or CSA approved conduit connector must be provided at each end of the power supply cable (at the cooktop and at the junction box). A listed conduit connector is already provided at the cooktop.
- If the house has aluminum wiring follow the procedure below:
    - Connect the aluminum wiring using special connectors and/or tools designed and UL listed for joining copper to aluminum.
    - Follow the electrical connector manufacturer's recommended procedure. Aluminum/copper connection must conform with local codes and industry accepted wiring practices.
    - If an anti-oxidant compound is added to the wiring connectors, the compound should be UL-Listed and suitable for the application materials, voltage and temperature.
    - Connectors for joining Aluminum and Copper wiring may be larger in size than standard connectors. It is recommended to use a double gang, or larger, electrical box to enclose the connectors joining Aluminum and Copper wiring.

INSTALLATION INSTRUCTIONS

IMPORTANT: This appliance shall be installed only by authorized persons and in accordance with the manufacturer's installation instructions, municipal building codes, and electrical wiring regulations.

PREPARATION

⚠ WARNING

EXCESSIVE WEIGHT HAZARD

- Use two or more people to move and install cooktop. Failure to do so can result in back or other injury.

⚠ CAUTION

LACERATION, FOREIGN OBJECT, CRUSH HAZARD

- When installing, moving, or servicing any appliance, wear proper protective equipment, including cut resistant gloves, steel-toed shoes, and safety glasses.

- When preparing cooktop opening, make sure the inside of the cabinet and the cooktop do not interfere with each other. (See the "Clearances" section.)
- Remove packaging materials package from the cooktop before beginning installation.
- Be sure to keep all literature, manual(s), etc. in a safe place for future reference.
- Make sure you have all the tools and materials you need before starting the installation of the cooktop.
- Your home must provide the adequate electrical service needed to safely and properly use your cooktop. (Refer to the "Electrical Requirements" section, and make sure all local codes and ordinances are followed exactly as stated.)

INSTALL CLAMPING BRACKETS

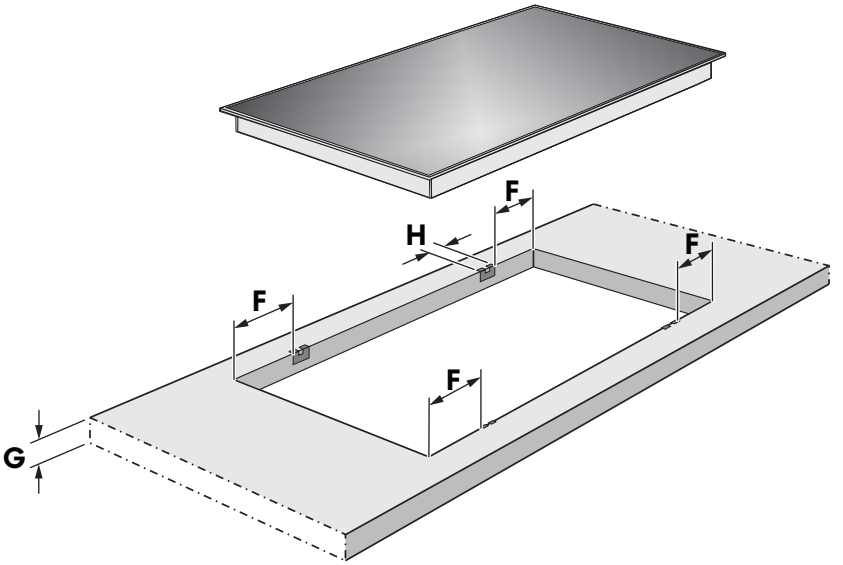

Model	F	G	H
	Suggested Bracket Assembling Distance	Countertop Surface Thickness	Bracket Width
COS-304TBECC (30")	4 15⁄16" (125 mm)	1 3⁄16" – 1 9⁄16" (30 – 40 mm)	2" (50 mm)
COS-365TBECC (36")	6 1⁄8" (155 mm)		

Wooden Countertops

Make sure any cut surfaces on the wooden countertop are sealed with a special varnish, silicone rubber, or resin to prevent the wood from swelling as a result of moisture. The sealant must be temperature-resistant. Ensure that the sealant does not get on the top surface of the countertop.

1. Position the clamping brackets on the top front and rear edges of the cutout as shown in the illustration above.

2. Fasten the clamping brackets using the clamping screws supplied with the cooktop.

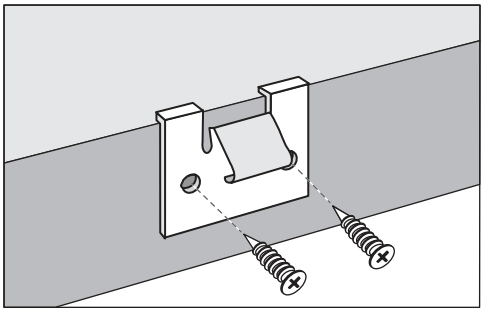

Granite and Marble Countertops

You will need heavy-duty double-sided adhesive tape and silicone (not included with the cooktop) to fasten the spring clamps.

1. Attach the adhesive tape along the top front and rear edges of the cutout in the clamping bracket positions shown in the illustration on previous page.

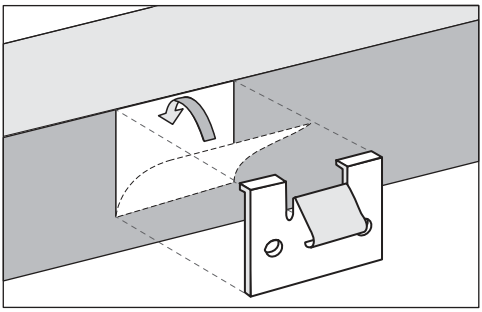

2. Position the clamping brackets on the top front and rear edges of the cutout and press them firmly into place.

3. Coat the side edges and the lower edges of the clamping brackets with silicone.

INSTALL COOKTOP

⚠ WARNING

EXCESSIVE WEIGHT HAZARD

- Use two or more people to move and install cooktop. Failure to do so can result in back or other injury.

⚠ CAUTION

LACERATION, FOREIGN OBJECT, CRUSH HAZARD

- When installing, moving, or servicing any appliance, wear proper protective equipment, including cut resistant gloves, steel-toed shoes, and safety glasses.

IMPORTANT:

- Do not use sealant between the cooktop and the countertop. Using sealant under the cooktop could result in damage to the cooktop and the countertop if the cooktop ever needs to be removed for servicing.
- If the cooktop is being installed into a blind counter (one with no cabinet opening below), electrical wire connections must be made before putting the cooktop into the cutout opening.
- The foam strip around bottom of the four edges of the cooktop glass helps avoid damage to the underside of the cooktop glass from debris and helps the cooktop sit flat on slightly uneven counters.

1. Using 2 or more people, feed the cooktop power cord down through the counter cutout and place the cooktop centered into the cutout. Make sure that the front edge of the cooktop is parallel to the front edge of the countertop.

2. Using both hands, press down evenly on the sides of the cooktop. Make sure that the foam strip below the edges of the cooktop glass sit flush with the countertop on all sides.

ELECTRICAL CONNECTION

⚠ WARNING



ELECTRICAL SHOCK HAZARD

- Disconnect power before servicing.
- Use 8 gauge copper wire.
- Electrically ground cooktop.
- Failure to follow these instructions can result in death, fire, or electrical shock.

IMPORTANT:

- Before installation or servicing, disconnect the power supply by either removing the fuse, shutting off the main power or manually "tripping" the circuit breaker.
- Installation work and repairs should only be performed by a qualified technician in accordance with all applicable codes and standards. Repairs and service by unqualified persons could be dangerous and the manufacturer will not be held responsible.
- Before connecting the appliance to the power supply, make sure that the voltage and frequency listed on the rating label correspond with the household electrical supply. This data must correspond to prevent appliance damage. Consult an electrician if in doubt.
- Connect the cooktop cable to the junction box through the UL listed or CSA approved conduit connector.
- When making the wire connections, use the entire length of conduit provided. The conduit must not be shortened.

The cooktop must connect to a single-phase (split-phase), 3-wire or 4-wire, AC 240 Volt 60 hertz electrical system. This appliance must be supplied with the proper voltage and frequency, and connected to an individual, properly grounded, 50 amp (minimum) branch circuit protected by a circuit breaker or time-delay fuse.

3-WIRE POWER SUPPLY CONNECTION

IMPORTANT: Use the 3-wire cable from power supply where local codes permit connecting the frame-ground conductor to the neutral (white) junction box wire.

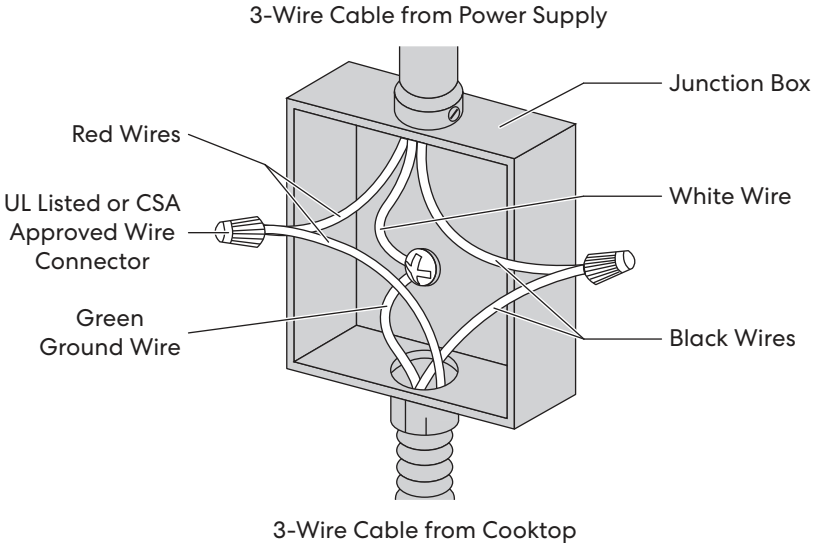

1. Disconnect power.
2. Remove junction box cover, if present.
3. Connect the flexible cable conduit from the cooktop to the junction box using a UL listed or CSA approved conduit connector.
4. Tighten screws on conduit connector if present.
5. Connect the two black wires together using the UL listed wire connectors.
6. Connect the two red wires together using the UL listed wire connectors.
7. Connect the green wire to the white (neutral) wire in the junction box using the UL listed wire connectors.
8. Install junction box cover, and reconnect power.

4-WIRE POWER SUPPLY CONNECTION

IMPORTANT: Use the 4-wire cable from power supply where local codes do not permit connecting the frame-ground conductor to the neutral (white) junction box wire.

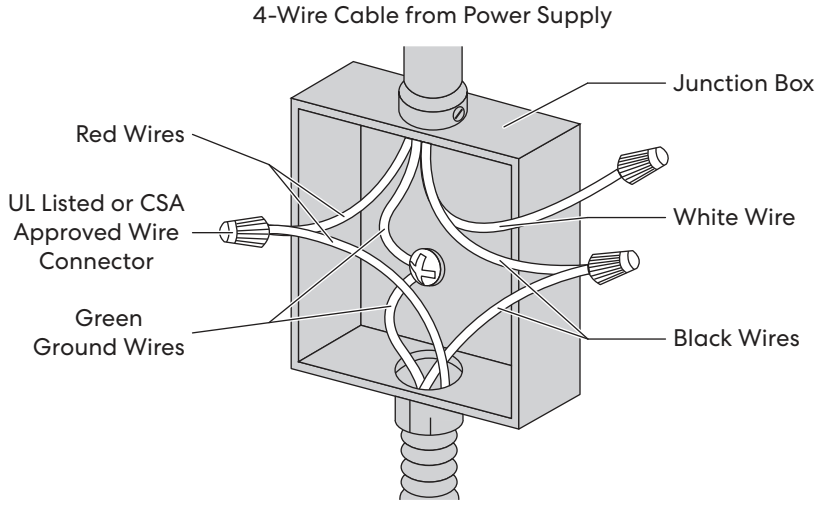

1. Disconnect power.
2. Remove junction box cover, if present.
3. Connect the flexible cable conduit from the cooktop to the junction box using a UL listed or CSA approved conduit connector.
4. Tighten screws on conduit connector if present.
5. Connect the two black wires together using the UL listed wire connectors.
6. Connect the two red wires together using the UL listed wire connectors.
7. Connect the green wire from the cooktop cable to the green or bare ground wire (in the junction box) using the UL listed wire connectors.
8. Put a UL listed wire connector on the end of the white (neutral) wire in the junction box.

   NOTE:
   - Do not connect the bare ground wire to the neutral (white) wire in the junction box.

9. Install junction box cover, and reconnect power.

COMPLETE INSTALLATION

CHECKING OPERATION OF THE SURFACE HEATING ELEMENTS

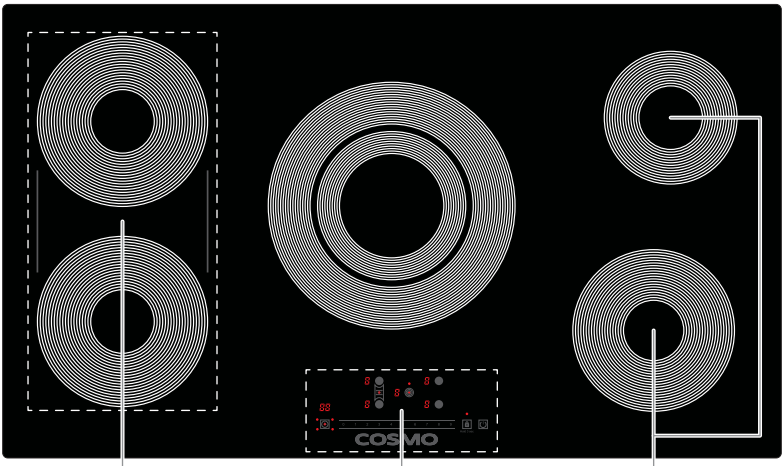

STANDARD SURFACE HEATING ELEMENTS

1. Touch the **power keypad** ⏻ for approximately 3 seconds to turn on the cooktop.
2. Touch the **element keypad** ● for the desired element.
3. Touch the number **9** on the element power settings to select the highest power level.

   The elements should glow red and radiate heat, and they should cycle on and off periodically.
4. Touch **0** on the element power settings to turn off the element, or touch the **power keypad** ⏻ to turn off the cooktop.

   The element display next to the element keypads will show "H" and indicate the element surfaces are still hot.

TRIPLE SURFACE HEATING ELEMENT

1. Touch the **power keypad** for approximately 3 seconds to turn on the cooktop.
2. Activate the triple element:
   - Touch the **triple element keypad** to activate the inner most element.
   - Touch the **triple element keypad** again to activate the inner most and middle elements (Dual Element). One indicator light at the triple element keypad will turn on.
   - Touch the **triple element keypad** again to activate the entire element (Triple Element). One more indicator light at the triple element keypad will turn on.
3. Touch the number **9** on the element power settings to select the highest power level.

   The elements should glow red and radiate heat, and they should cycle on and off periodically.
4. Touch **0** on the element power settings to turn off the element, or touch the **power keypad** to turn off the cooktop.

   The element display next to the element keypad will show "H" and indicate the element surface is still hot.

SYNCHRONIZE LEFT HEATING ELEMENTS

1. Touch the **power keypad** for approximately 3 seconds to turn on the cooktop.
2. Touch the **Sync keypad** to connect the two elements. The indicator light at the Sync keypad will turn on, and the element display of the connected elements will flash simultaneously.
3. Touch the number **9** on the element power settings to select the highest power level.

   The two connected elements and the bridge elements between the two connected elements should glow red and radiate heat, and they should cycle on and off periodically.
4. Touch **0** on the element power settings to turn off the element, or touch the **power keypad** to turn off the cooktop.

   The element display next to the element keypads will show "H" and indicate the element surfaces are still hot.

COOKTOP LAYOUT

COS-304TBECC (30")

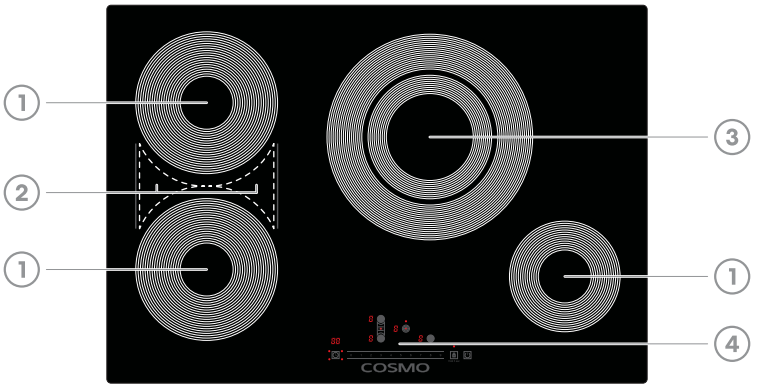

COS-365TBECC (36")

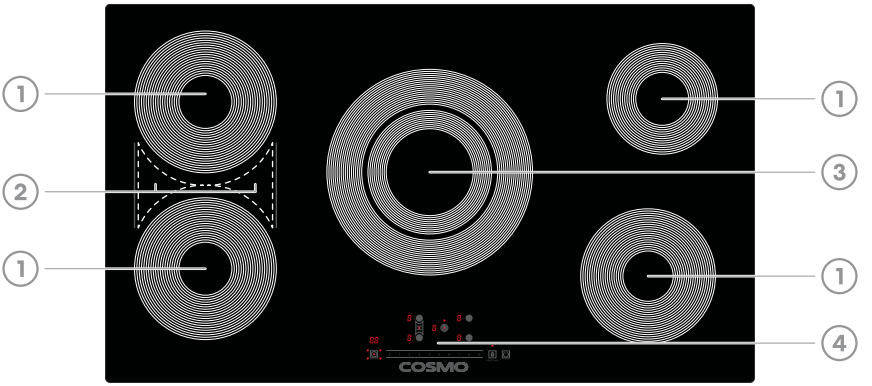

1. Single Heating Element
2. Synchornize Bridge Element
3. Triple Heating Element
4. Control Panel

CONTROL PANEL

COS-304TBECC (30")

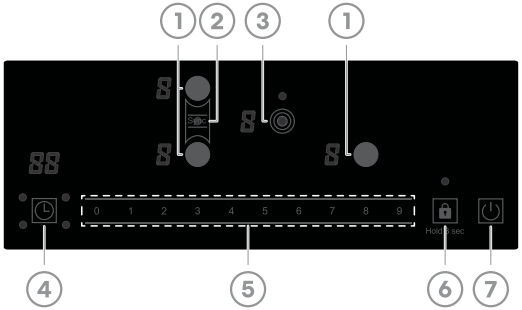

COS-365TBECC (36")

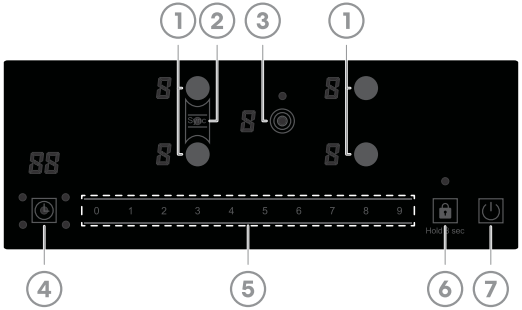

#	Keypad	Description
1	Element	To select the heating elements.
2	Sync	To turn the synchronization of left heating elements on and off.
3	Triple Element	To select the triple heating element and adjust the ring size.
4	Timer	To set or cancel the timer.
5	Element Power Settings	To set the power level of heating elements.
6	Lock	To activate and deactivate cooktop keypads.
7	Power	To turn the cooktop on and off.

TIMER

Set the heating element to operate for a specific length of time up to 99 minutes and the heating element turns off automatically at the end of the cooking time.

NOTE:

- The heating element must be turned on before setting the timer.
- If more than one timer is set for multiple heating elements, the timer display will always show the first ending countdown time.

Setting the Timer

(Example: Set front-right heating element to cook at power level 2 and turn off automatically after 30 minutes.)

1. Touch the **power keypad** for approximately 3 seconds to turn on the cooktop.
2. Touch the **front-right element keypad** .
3. Touch **2** on the element power settings. The element display will show a solid "2" and the element will glow red and radiate heat.
4. Touch the **timer keypad** repeatedly to select the timer for front-right heating element. The indicator light at the timer keypad turns on for the heating element selected.
5. Touch **3** and **0** on the element power settings to set the cooking time. The display above the timer keypad will show a solid "30" and the countdown timer in minute steps will start running.

   When the countdown timer reaches the end of last minute "01", an end tone (quick 5 beeps) sounds and the element turns off automatically. The element display next to the element keypad will show "H" and indicate the element surface is still hot.

Canceling the Timer

All Timers

1. Touch the **timer keypad**  for approximately 3 seconds to cancel all timers.

Individual Timer

1. Touch the **timer keypad**  repeatedly to select the desired timer. The indicator light at the timer keypad turns on for the heating element selected.

2. Touch **0** twice on the element power settings to set 0-minute cooking time. The timer will be canceled.

LOCK

The Lock feature locks most keypads (except the power keypad) to avoid unintended use of the cooktop.

- Press and hold the **lock keypad**  for 3 seconds to activate or deactivate the cooktop keypads. The display above the timer keypad will show "Lo" when the lock is activated.

OPERATION

BEFORE USING THE COOKTOP

Read all instructions before using.

⚠ WARNING

- Do not cook on a broken cooktop. If the cooktop is broken, cleaning solutions and spillovers may penetrate the broken cooktop and create a risk of electric shock. Contact a qualified technician immediately.
- Do not place hot cookware over the keypads or indicator lights on the control panel. Placing hot cookware on the control panel can damage the electronic underneath.
- Do not place or store items that can melt or catch fire on the glass cooktop, even when it is not being used.
- Never leave surface units unattended at high heat settings. Boilovers cause smoking and greasy spills that may catch on fire.
- Keep flammable items away from the cooktop.
- Turn off all controls when done cooking.
- Turn cookware handles inward and not extend over adjacent surface units to reduce the risk of burns, ignition of flammable materials, and spillage due to unintentional contact with the cookware.
- Always place the pan in the center of the surface unit you are cooking on. Proper contact of cookware to heating element also will improve efficiency.
- Clean cooktop with caution. If a wet sponge or cloth is used to wipe spills on a hot cooking area, be careful to avoid steam burn. Some cleaners can produce noxious fumes if applied to a hot surface.

⚠ CAUTION

- Never cook directly on the glass. Always use cookware.
- Do not use the glass cooktop surface as a cutting board.
- Do not place any cookware, utensils, or leave excess water spills on control key pads. This may result in unresponsive touch pads and turning off the cooktop if present for several seconds.
- Do not slide metal or glass across the cooktop surface. Cookware with rough or uneven bottoms can mark or scratch the cooktop surface.
- Do not place sealed containers on the cooktop.
- Do not place aluminum foil or plastic items such as salt and pepper shakers, spoon holders, or plastic wrappings or any other material on the cooktop when it is in use.
- Do not turn surface units on before placing cookware.
- Always turn the surface units off before removing cookware.
- The surface element may appear to have cooled after it has been turned off. The element may still be hot and touching the element before it has cooled sufficiently can cause burns.
- Only certain types of glass, glass-ceramic, ceramic, earthenware, or other glazed cookware are suitable for cooktop service without breaking due to the sudden change in temperature.
- Choose proper heating element size. For smaller pots and pans, use the smaller heating elements. For larger pots and pans, use the larger heating elements. Select pans that have flat bottoms large enough to cover the heating elements. Using undersized pans exposes a portion of the heating element to direct contact and may result in clothing burning.
- Immediately clean spills on the cooking area to prevent a tough cleaning chore later.
- Do not use a steel-wool pad or scrub pad or abrasive cleaning pads. They can scratch the surface.

COOKING AREAS

The cooking areas on your cooktop are identified by permanent circles on the glass cooktop surface.

For the most efficient cooking, fit the pan size to the element size. Pans should not extend more than 1/2" to 1" beyond the cooking area.

When a control is turned on, a glow can be seen through the glass cooktop surface.

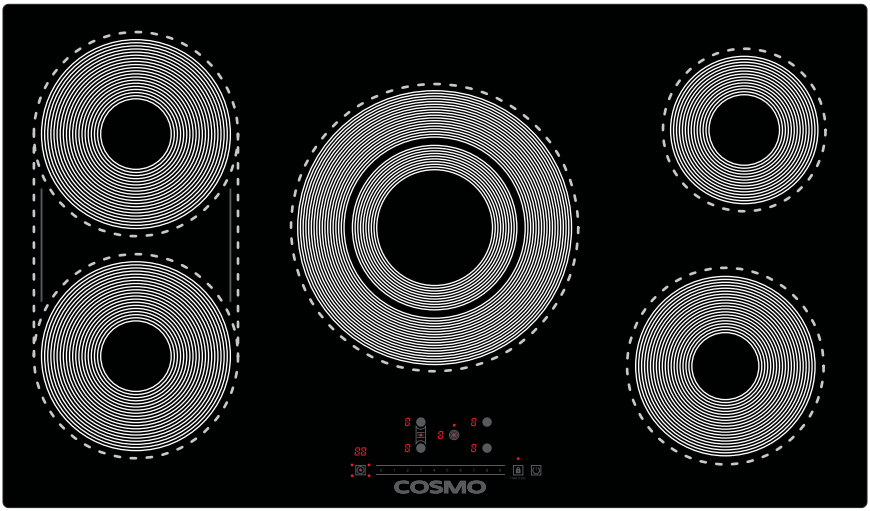

NOTE:

- It is normal for the cooktop elements to cycle on and off during cooking, even on higher settings.
- Do not place hot cookware over the keypads or indicator lights in the control panel. Placing hot cookware on the control panel can damage the electronic underneath.

HOT SURFACE INDICATOR

The element display next to the element keypad shows "H" after the element is turned off, and indicates that element surface is still hot. When the surface has cooled to approximately 150°F and the hot surface indicator "H" disappears in the element display, the glass surface may still feel slightly hot to touch.



USING THE COOKTOP ELEMENTS

The cooktop elements have a 2-hour heating time limit, after which the control will automatically turn off the elements to avoid the elements being left on accidentally. If desired, the cooktop elements can be restarted after the time limit expires.

Turning on a Single Element

1. Touch the **power keypad** ⏻ for approximately 3 seconds to turn on the cooktop.
2. Touch the **element keypad** ● for the desired element.
3. Touch the number from **1** to **9** on the element power settings to select the desired power level.

   The elements should glow red and radiate heat, and they should cycle on and off periodically.
4. To change the power level, touch the **element keypad** ● for that element again if another element keypad was touched, and touch the number from **1** to **9** on the element power settings to select the desired power level.
5. To turn off an element, touch the **element keypad** ● for that element again if another element keypad was touched and touch **0** on the element power settings; or touch the **power keypad** ⏻ to turn off the cooktop.

   The element display next to the element keypads will show "H" and indicate the element surfaces are still hot.

Turning on the Triple Element

1. Touch the **power keypad** for approximately 3 seconds to turn on the cooktop.
2. Activate the triple element:
   - Touch the **triple element keypad** to activate the inner most element.
   - Touch the **triple element keypad** again to activate the inner most and middle elements (Dual Element). One indicator light at the triple element keypad will turn on.
   - Touch the **triple element keypad** again to activate the entire element (Triple Element). One more indicator light at the triple element keypad will turn on.
3. Touch the number from **1** to **9** on the element power settings to select the desired power level.

   The elements should glow red and radiate heat, and they should cycle on and off periodically.
4. To change the power level, touch the **triple element keypad** for that element again if another element keypad was touched, and touch the number from **1** to **9** on the element power settings to select the desired power level.
5. To turn off the element, touch the **triple element keypad** again if another element keypad was touched and touch **0** on the element power settings; or touch the **power keypad** to turn off the cooktop.

   The element display next to the element keypad will show "H" and indicate the element surface is still hot.

Synchronizing the Left Heating Elements

1. Touch the **power keypad** for approximately 3 seconds to turn on the cooktop.
2. Touch the **Sync keypad** to connect the two elements. The indicator light at the Sync keypad will turn on, and the element display of the connected elements will flash simultaneously.
3. Touch the number from **1** to **9** on the element power settings to select the desired power level.

   The two connected elements and the bridge elements between the two connected elements should glow red and radiate heat, and they should cycle on and off periodically.
4. To disconnect the left elements and turn off the bridge elements, touch the **Sync keypad** for approximately 3 seconds. The indicator light at the Sync keypad will turn off.

5. To turn off an element, touch the **element keypad** for that element again if any other element keypads were touched and touch **0** on the element power settings, or touch the **power keypad** to turn off the cooktop.

   The element display next to the element keypads will show "H" and indicate the element surfaces are still hot.

USING THE PROPER COOKWARE

The size and type of cookware will influence the settings needed for the best cooking results. Cookware should have flat bottoms that make good contact with the entire surface heating element.

Cookware Recommendations

- Flat bottom and straight sides
- Heavy-gauge pans
- Pan sizes that match the amount of food to be prepared and the size of the surface element
- Weight of handle does not tilt pan. Pan is well balanced
- Tight-fitting lids
- Flat bottom woks

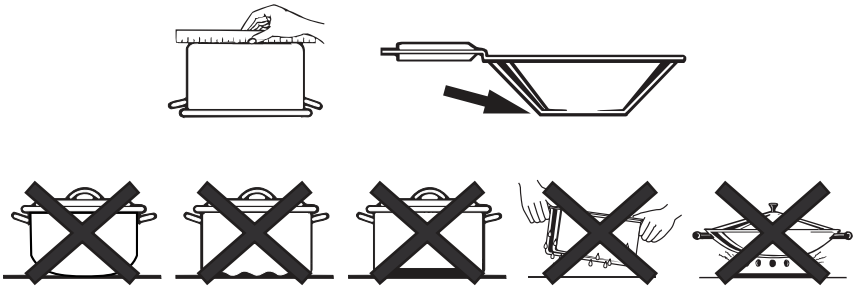

NOTE:

- Do not use woks that have support rings. This type of wok will not heat on glass surface elements.
- Do not use foil or foil-type containers. Foil may melt onto the glass. Do not use the cooktop if metal has melted on it.

Choosing Cookware

The cookware material determines how evenly and quickly heat is transferred from the surface element to the pan bottom.

Recommended

- **Aluminum** - Excellent heat conductor. Some types of food will cause it to darken (anodized aluminum cookware resists staining and pitting). If aluminum pans slide across the ceramic cooktop, they may leave metal marks which will resemble scratches. Remove these marks immediately. Because of its low melting point, thin weight aluminum should not be used.
- **Copper** - Excellent heat conductor but discolors easily. May leave metal marks on glass-ceramic (see Aluminum above). Do not let these pots boil dry. Overheated metal can bond to glass cooktops. An overheated copper bottom pot will leave a residue that will permanently stain the cooktop if not removed immediately.
- **Stainless Steel** - Slow heat conductor with uneven cooking results. Is durable, easy to clean and resists staining.
- **Enamel (painted) on Cast Iron** - Bottom of pan must be smooth coated and smooth.

Not Recommended

- **Enamel (painted) on Steel** - Heating empty pans can cause permanent damage to cooktop glass. The enamel can melt and bond to the ceramic cooktop.
- **Cast iron** - A poor heat conductor, slow to absorb heat but retains heat very well. Will scratch the glass surface. Not recommended unless designed specifically for use on ceramic cooktops.
- **Glass-ceramic** - Slow heat conductor. Poor performance, and will scratch the glass surface.
- **Stoneware** - Poor performance, and may scratch the glass surface.

COOKTOP CARE AND MAINTENANCE

CLEANING

IMPORTANT:

- Before cleaning, make sure all controls are off and the cooktop is cool.
- Always follow label instructions on cleaning products. Soap, water and a soft cloth or sponge are suggested first unless otherwise noted.
- Do not use abrasive cleaning products.

GENERAL CLEANING

- Before using the cooktop for the first time, clean it with a ceramic cooktop cleaner. This helps protect the top and makes cleanup easier.
- Regular use of ceramic cooktop cleaner will help keep the cooktop looking new.
- If any sugar or food containing sugar spills, or plastic or foil melts on the cooktop, remove the material IMMEDIATELY with a metal razor scraper while the cooking surface is still hot to avoid the risk of damage to the glass-ceramic surface. When used correctly, the scraper will not damage the cooktop surface.
- For your safety, please use an oven mitt or pot holder while scraping the hot cooking surface.
- If water or food containing water spills, remove the spill IMMEDIATELY with a dry paper towel.
- Do not use scrub pads or abrasive cleaning pads. They may damage your cooktop surface.

Cleaning Method:

- Use ceramic cooktop cleaner on the glass cooktop. Other creams may not be as effective or may scratch, damage or stain the cooktop surface.
- Use a paper towel or non-scratch cleaning pad to clean the entire cooktop surface.
- Rinse with clear water and use a dry cloth or paper towel to remove all cleaning residue.

NOTE:

- Any damage or failure of the product resulting from the items below may not be covered under the Limited Warranty.
  - Sugary spillovers (such as preserves, ketchup, tomato sauce, jellies, fudge, candy, syrups, or chocolate) or melted plastics can cause pitting on the surface of your cooktop.
  - If food or water containing calcium (such as baking powder, wine, milk, spinach, or broccoli) is spilled on the cooktop, it can permanently stain or discolor the surface.

BURNED-ON RESIDUE

- Allow the cooktop to cool.
- For additional protection, after all residue has been removed, polish the entire surface with ceramic cooktop cleaner and a paper towel.

Cleaning Methods:

- Spread a few drops of ceramic cooktop cleaner on the entire burned residue area. Using a non-scratch cleaning pad for ceramic cooktops, rub the residue area, applying pressure as needed. Leave the cleaner on for 10 minutes before rinsing it off.
- Rinse with clear water and wipe the cooktop surface with a clean, dry paper towel. If any residue remains, repeat the steps listed above as needed.

NOTE:

- Damage to your glass surface may occur if you use scrub pads other than those recommended.

HEAVY BURNED-ON RESIDUE

- Allow the cooktop to cool.
- For additional protection, after all residue has been removed, polish the entire surface with ceramic cooktop cleaner and a paper towel.

Cleaning Methods:

- While the cooktop is still warm, use a single-edge razor blade scraper at approximately a 30° to 45° angle against the glass surface and scrape the soil. It will be necessary to apply pressure to the razor scraper in order to remove the residue.
- When the cooking surface is completely cooled, spread a few drops of ceramic cooktop cleaner on the entire burned residue area. Using a non-scratch cleaning pad for ceramic cooktops, rub the residue area, applying pressure as needed. Leave the cleaner on for 10 minutes before rinsing it off.
- Rinse with clear water and wipe the cooktop surface with a clean, dry paper towel.

NOTE:

- Do not use a dull or nicked blade.

METAL MARKS AND SCRATCHES

- Cookware with rough or uneven bottoms can mark or scratch the cooktop surface. Carefully check the bottom of pans.
- Do not slide metal or glass across the cooktop surface.
- Do not use cookware with any dirt build-up on the bottom.
- Always clean the cooktop surface before cooking.
- Be careful not to place aluminum baking sheets or aluminum frozen entrée containers on a hot cooktop surface. It will leave shinny dots or markings on the cooktop surface. These markings are permanent and cannot be cleaned off.

Cleaning Methods:

- Be careful not to slide pots and pans across your cooktop. It will leave metal markings on the cooktop surface. These marks are removable using the ceramic cooktop cleaner with a non-scratch cleaning pad for ceramic cooktops.
- If pots with a thin overlay of aluminum or copper are allowed to boil dry, the overlay may leave black discoloration on the cooktop. This should be removed immediately before heating again or the discoloration may be permanent.

TROUBLESHOOTING

First try the solutions suggested here to possibly avoid the cost of a service call.

COOKTOP PROBLEMS

PROBLEM	POSSIBLE CAUSE	SOLUTION
Surface units do not work properly	There is no power to the cooktop.	Make sure electrical plug is plugged into a live, properly grounded outlet. Replace the fuse or reset the circuit breaker.
	Cooktop controls improperly set.	Check to see the correct control is set for the surface unit you are using.
Excessive heat around cookware on cooktop	The cookware is not the proper size for the element or burner.	Use cookware with a bottom surface approximately the same size as the cooking area, element, or surface burner. Cookware should not extend more than 1" (2.5 cm) outside the cooking area. Adjust the power level or burner flame appropriately.
Frequent cycling on and off of surface units	The element cycle on and off to maintain the heat setting.	This is normal even when the element is on the highest setting.
Surface unit stops glowing when changed to a lower setting	The unit is still on and hot.	This is normal.
Cooking results are not what expected	Using incorrect cookware.	See the "Using The Proper Cookware" section.
	The control knob is not set to the proper heat level.	See the "Using The Cooktop Elements" section.

PROBLEM	POSSIBLE CAUSE	SOLUTION
Unable to maintain a rolling boil or will not cook fast enough	Using improper cookware.	Use pans with flat bottoms and that match the diameter of the cooktop element selected. See the "Using The Proper Cookware" section.
	Using large cookware without lid.	Large pots and pans can lose a lot of heat from the top. Cover pot or pan with a lid to retain heat better.
Areas of discoloration on the cooktop	Food spillovers not cleaned before next use.	See the "Cleaning" section.
	Cooktop is not cleaned thoroughly.	See the "Cleaning" section.
	Mineral deposits from water and food.	Remove using a glass-ceramic cooktop cleaning crème. Use cookware with clean, dry bottoms.
Scratches or abrasions on cooktop surface	Coarse particles such as salt or sand between cooktop and utensils can cause scratches.	Be sure the cooktop surface and bottoms of utensils are clean before using. Small scratches do not affect cooking and will become less visible with time.
	Cookware with rough bottom has been used.	Use smooth, flat-bottomed cookware.
	Cleaning materials not recommended for glass-ceramic cooktop have been used.	See the "Cleaning" section.
Metal marks	Scraping of metal utensils on cooktop surface.	Do not slide metal utensils on cooktop surface. Use a glass-ceramic cooktop cleaning crème to remove the marks. See the "Cleaning" section.
Brown streaks or specks	Boilovers are cooked onto surface.	Use a blade scraper to remove soil. See the "Cleaning" section.

LIMITED WARRANTY

WARRANTY AND SERVICE

TO RECEIVE WARRANTY SERVICE, YOUR PRODUCT MUST BE REGISTERED.
TO REGISTER AND REVIEW FULL WARRANTY DETAILS, VISIT:

WWW.COSMOAPPLIANCES.COM/WARRANTY

SCAN TO REGISTER

CUSTOMER SUPPORT

TO CHAT WITH US LIVE FOR ASSISTANCE, VISIT:

WWW.COSMOAPPLIANCES.COM/CHAT

SCAN TO CHAT

IMPORTANT

Do Not Return This Product To The Store

If you have a problem with this product, please contact COSMO Customer Support at

+1 (888) 784-3108

DATED PROOF OF PURCHASE, MODEL #, AND SERIAL # REQUIRED FOR WARRANTY SERVICE.

IMPORTANT

Ne pas Réexpédier ce Produit au Magasin

Pour tout problème concernant ce produit, veuillez contacter le service des consommateurs Cosmo Customer Support au

+1 (888) 784-3108

UNE PREUVE D'ACHAT DATEE EST REQUISE POUR BENEFICIER DE LA GARANTIE.

IMPORTANTE

No regrese este producto a la tienda

Si tiene algún problema con este producto, por favor contacte el ayuda al cliente COSMO al

+1 (888) 784-3108

(Válido solo en E.U.A.)

NECESITA UNA PRUEBA DE DE COMPRA FECHADA, NÚMERO DE MODELO Y DE SERIE PARA EL SERVICIO DE LA GARANTÍA.

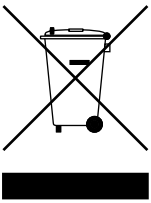

Correct disposal of this product:

This marking indicates that this appliance should not be disposed with other household wastes. To prevent possible harm to the environment or human health from uncontrolled waste disposal, recycle it responsibly to promote the sustainable reuse of material resources.

MEMO

MEMO

COSMO

APPLIANCES

Cosmo is constantly making efforts to improve the quality and performance of our products, so we may make changes to our appliances without updating this manual.

Electronic version of this manual is available at:
www.cosmoappliances.com