Pure Sine Wave Inverter

Product Manual

CE EMC RoHS FCC

YUEQING RELIABLE ELECTRIC CO.,LTD.

Read this guide before installing or using the inverter and save it for future reference.

Safety First

Incorrect installation or misuse of the inverter may result in danger to the user or hazardous conditions. We urge you to pay special attention to all CAUTION and WARNING statements. CAUTION statements identify conditions or practices that may result in damage to other equipment. WARNING statements identify conditions that may result in personal injury or loss of life.

**WARNING! Shock hazard. Keep away from children.**

- The inverter generates the same potentially lethal AC power as a normal household wall outlet. Treat it with the same respect that you should have to any AC outlet.
- Do not insert foreign objects into the inverter's AC outlets, fan or vent openings.
- Do not expose the inverter to water, rain, snow or spray.
- Do not, under any circumstances, connect the inverter to utility power AC distribution wiring.

**WARNING! Heated surface.**

- The inverter's housing may become uncomfortably warm, reaching 140℉ (60℃) under extended high power operation. Ensure that at least 2 inches (5cm) of air space is maintained on all sides of the inverter. During operation, keep away from materials that may be affected by high temperatures.

**WARNING! Explosion hazard.**

- Do not use the inverter in the presence of flammable fumes or gases, such as in the bilge of a gasoline powered boat, or near propane tanks. Do not use the inverter in an enclosure containing automotive-type lead-acid batteries. These batteries, unlike sealed batteries, vent explosive hydrogen gas, which can be ignited by sparks from electrical connections.
- When working on electrical equipment, always ensure someone is nearby to help you in an emergency. It is recommended that the installation should be undertaken by a qualified, licensed electrician.

**CAUTION!**

- Do not connect live AC power (City power/ Grid Electricity) to the inverter's AC outlets. The inverter will be damaged even if it is switched OFF.
- Do not connect any AC load, which has its neutral conductor connected to ground, to the inverter. Note that the red is for hot, the black is for neutral, and the yellow is for ground, if the breaker ground line is combined with

neutral, please connect it to the black wire on the inverter. It CANNOT connect the red and yellow or black and yellow line to power the load.

- Do not expose the inverter to temperatures exceeding 104℉ (40 ℃).

CAUTION! SAFETY INSTRUCTIONS - INVERTER RELATED

- **Preventing Reverse Polarity on the DC Input Side**

When making battery connections on the input side, make sure that the polarity of battery connections is correct (Connect the Positive of the battery to the Positive terminal of the unit and the Negative of the battery to the Negative terminal of the unit). If the input is connected in reverse polarity, DC fuse(s) inside the inverter will blow and may also cause permanent damage to the inverter.

NOTE: Damage caused by reverse polarity is not covered by warranty!

- **Preventing connection of the inverter AC side together. Unstackable.**

No stack use of several off grid inverters. Connecting the inverter AC side together will cause the failure of the inverter immediately. No AC output connection in series or in parallel. The AC output of the inverter can not be synchronized with another AC source. No connection to any electrical breaker panel/load center which is also from utility power or generator. The AC power back to the inverter will instantly damage the output section of the inverter, may also cause a fire or safety hazard.

Connection from Batteries to the DC Input Side – Sizing of Cables and Fuses

The cable for connecting the battery and the inverter will affect the inverter output performance, please use all of the cables supplied in the pack or larger cable. The fuse between the battery and the inverter will also affect the output power. Please calculate the fuse or breaker amper with this formula inverter power/input voltage * 2.

- Do not overload. Do not use for the equipments with exceeding power capacity than the power inverter's rated power. Better to use 80% of the rated power of the power inverter for longevity of the power inverter. Pay attention to the inductive load with 5-10 times higher.

Product Introduction

This inverter transforms the DC power from the battery to standard household AC power for AC appliances. It adopts highly advanced intelligent control chips with software and well designed hardware. The inverters' output wave form is real pure sine wave, which is a good as the grid power. The pure sine wave inverter has high efficiency and stable performance. It has sound protections including overload protection,over current protection, short circuit protection,

battery reverse connection protection, high temperature protection, high or low battery input protection, built-in fuse protection.

1. Inverter Specification

1.1 **Rated Continuous power:**
300W/500W/600W/800W/1200W/1300W/1500W/2000W/
2500W/3000W/3200W/3500W/4000W/5000W/6000W/7000W/8000W/10000W/12000W/15000W
1.2 **Surge output power:** 2 times higher than the rated power
1.3 **Standby input power**: 300w ~ 800w <10W, 1000w~2000w <15W, 2500~3000W<30W , 3500~4000W <35W, 5000W~8000W<40W
1.4 **DC Input Voltage :** 12V/24V/36V/48V/60V/72V/96/110V
1.5 **DC input voltage range:**10~15VDC/20~30VDC/30~45VDC/40~60VDC/48~75VDC/60~90VDC/80~120V/85~127V
1.6 **High battery shut down range:** 15V/30V/45V/60V/75V/90V/120V/127V
1.7 **AC output voltage (nominal):** 100/110/120VAC/220/230V/240VAC
1.8 **AC output frequency:** 50±2Hz/60±2Hz
1.9 **AC output waveform:** Pure sine wave

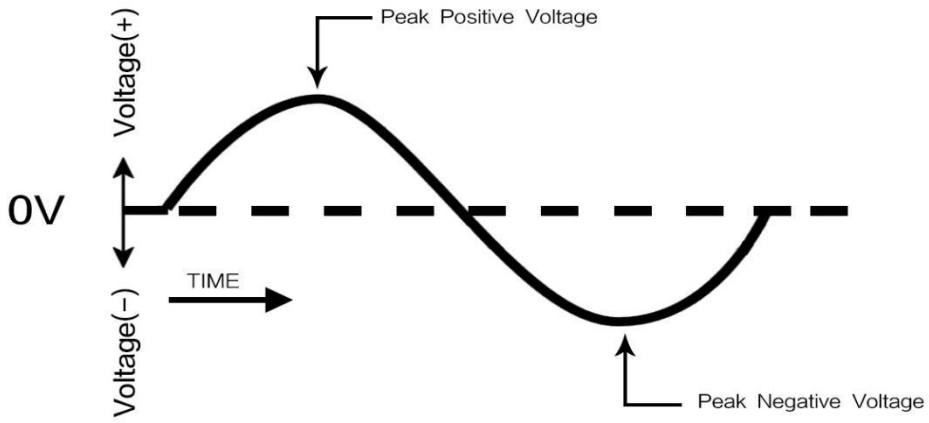

1.10 **Conversion efficiency:** ≧85%
1.11 **Ambient operating temperature range:** 32℉-104℉/0℃-40℃
1.12 **Cooling method:**Intelligent temperature controlled fan
1.13 **Protection:** Input low voltage protection, Input high voltage protection, overload protection, temperature protection, short circuit protection, battery reverse protection.
1.14 **Packing:** inverter, cable, fuse, manual,warranty card.

NOTE: The fuse is for the replacement of the fuse inside of the inverter as a backup. No need of change for usage in the first time.

2. Status Indication:

2.1 Normal working indication: both DC and AC display lit, blue light lit, red light flashing or no lit.

2.2 Abnormal input voltage indication:

Input low voltage alarm	red light lit, alarm on
Input low voltage protection	Red light lit, alarm on, no AC output
Input high voltage protection	Red light lit, no AC output

2.3 Abnormal output indication:

Output overload or short circuit protection.	Red light lit, no AC output
Short Circuit protection	Short circuit protection only last for 2~3 seconds, alarm on and red light lit.

2.4 Abnormal temperature indication: red light lit, alarm on.

3. Insulation performance:

3.1 Dielectric voltage withstand:

Input end to the shell	1000VAC (50Hz 1min≦1.5mA)
Output end to the shell	1000VAC (50Hz 1min≦1.5mA)

3.2 Insulation resistance:

Input end to the shell	>20MΩ （1000VDC）
Output end to the shell	>20MΩ （1000VDC）

4. **Inverter Operation:**

4.1 Working Environment: Indoor use only. Choose a cool, clean, dry and well ventilated place. Close to the battery bank to prevent the voltage drop in the battery cables. Make enough room to access the AC receptacles and DC wiring terminal and connections.

4.2 Mounting Orientation

The inverter can be mounted horizontally on a vertical surface like a wall. Mount on a non-combustible material. The mounting surface can support the weight of the unit.

4.3 DC Side Connection

4.3.1.Preventing DC input Over voltage. Do not connect the inverter to a battery system with a voltage higher than the rated battery input voltage.

4.3.2 Do not use solar panel or solar charge controller to connect to the inverter. Only connect the inverter with well charged battery or battery bank with stable voltage.

4.3.3. Recommended Size of battery cables and fuses.

Spec. Of Inverter	Spec.	Quantity	Note
300W	4mm^2 /AWG11	2	1 red 1 Blue or black
500W-1000W	10mm^2 /AWG7	2	1 red 1 Blue or black
1500W-2500W	10mm^2 /AWG7	4	2 Red T2 Blue or black
1500W-2500W Alluminum shell	20mm^2/AWG4 (2 of 10 mm^2 combined into one)	2	1 Red 1 Blue or black
3000W	10mm^2/AWG7	4	2Red 2Blue or black
4000w	16mm^2/AWG5	4	2Red 2Blue or black
5000W	16mm^2/AWG5	6	3Red 3Blue or black
6000w-10000W	16mm^2/AWG5	8	4Red 4Blue or black

Length:50cm/ 19.7inches
Fuse Spec.: 40A for 12VDC input inverter. 20A for 24VDC input inverter. 10A for other DC volt input such as 48V, 36V,72V,96V ect.

4.4 Inverter Output Layout



1. The led light display
a. The red light blinking: Normal. high input voltage reminder. Do not affect the usage.
b. The blue light on: normal working.
c. The red light on: fault.

2. Input DC voltage display.
3. Output AC voltage display.
4. Socket type for AC output
5. Wire terminal for AC output: red line for live, black line for neutral, yellow line for ground.

NOTE:

1. NO connect the red wire with the yellow one or the black one with yellow one, the voltage from this connection is not the true voltage, it will damage your equipment.
2. If the house neutral wire is combined with the ground, connect the black wire with it, Do not connect the inverter yellow wire with the black wire together.
3. The terminal cover panel is on the fuse bag, put it on when it is in use.

4.5 Operation Instruction

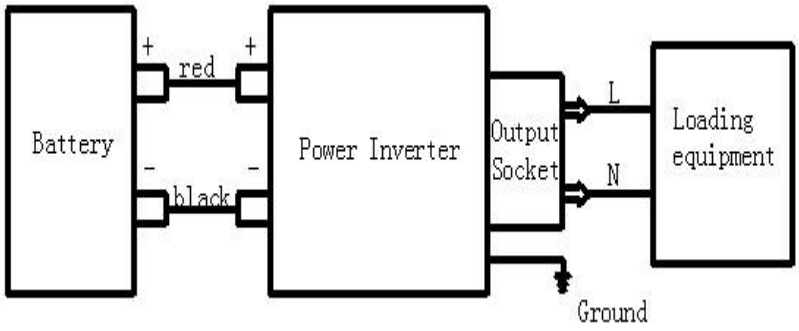

1. Red binding post for positive, black binding post for the negative.
2. Use the cable we sent to connect the battery and inverter, otherwise, the full output power is not guaranteed.
3. It is recommended the inverter connect after the battery directly. Do not connect it to the solar controller.
4. For 24/7/365 long time usage, it is recommended 70% of the rated power usage.
5. The battery voltage must be the same as the inverter input voltage.

4.6 AC Side Connection

Make sure the inverter power switch is in the OFF position.
Connect the inverter to a fully charged battery or battery bank.
Connect the electric appliance to AC output socket of the inverter.
Turn the inverter “ON” – the blue LED should light up, indicating power is on and inverter is functional. Turn on the Appliance.
When finished, turn off the appliance firstly, then turn inverter power switch to “OFF” position, this will shut down the inverter.

Note: When using wired remote controller make sure the inverter “ON/OFF” Switch is in the “ON”position.

IMPORTANT: Vehicle batteries are designed to provide brief periods of very high current needed for engine starting. They are not intended for constant deep discharge. Regularly operating the inverter shortens the life of the battery. Consider connecting the inverter to a separate deep discharge type battery if you will be frequently running electrical products for extended periods of time.

4.7 Inverter Load Reference:

Rated Continuous Power:

This rating may be specified as “Active Power” in Watts (W) or “Apparent Power” in Volt Amps (VA). It is normally specified in“Active Power (P)” in Watts for Resistive type of loads that have Power factor =1. Reactive types of loads will draw higher value of “Apparent Power” that is the sum of “Active and Reactive Powers”. Thus, AC power source should be sized based on the higher“Apparent Power” Rating in (VA) for all Reactive Types of AC loads. If the AC power source is sized based on the lower “Active Power” Rating in Watts (W), the AC power source may be subjected to overload conditions when powering Reactive Type of loads.

Surge Power Rating:

During start up, certain loads require considerably higher surge of power for short duration (lasting from tens of milliseconds to few seconds) as compared to their Maximum Continuous Running Power Rating. The inverter continuous power should be higher than the surge power rating of these appliances. Some examples of such loads are given below:

Electric Motors: At the moment when an electric motor is powered ON, the rotor is stationary (equivalent to being “Locked”), there is no “Back EMF” and the windings draw a very heavy surge of starting current (Amperes) called “Locked Rotor Amperes”(LRA) due to low DC resistance of the windings. For example, in motor driven loads like Air-conditioning and Refrigeration Compressors and in Well Pumps (using Pressure Tank), the Starting Surge Current / LRA may be as high as 10 times its rated Full Load Amps (FLA) / Maximum Continuous Running Power Rating. The value and duration of the Starting Surge Current / LRA of the motor depends upon the winding design of the motor and the inertia / resistance to movement of mechanical load being driven by the motor. As the motor speed rises to its rated RPM, “Back EMF”proportional to the RPM is generated in the windings and the current draw reduces proportionately till it draws the running FLA / Maximum Continuous Running Power Rating at the rated RPM.

Transformers (e.g. Isolation Transformers, Step-up / Step-down Transformers, Power Transformer in Microwave Oven etc.): At the moment when AC power is

supplied to a transformer, the transformer draws very heavy surge of "Magnetization Inrush Current" for a few millisecs that can reach up to 10 times the Maximum Continuous Rating of the Transformer.

Devices like Infrared Quartz Halogen Heaters (also used in Laser Printers) / Quartz Halogen Lights / Incandescent Light Bulbs using Tungsten heating elements: Tungsten has a very high Positive Temperature Coefficient of Resistance i.e. it has lower resistance
when cold and higher resistance when hot. As Tungsten heating element will be cold at the time of powering ON, its resistance will be low and hence, the device will draw very heavy surge of current with consequent very heavy surge of power with a value of up to 8 times the Maximum Continuous Running AC Power.

AC to DC Switched Mode Power Supplies (SMPS): This type of power supply is used as stand-alone power supply or as front end in all electronic devices powered from Utility/ Grid e.g. in audio/video/ computing devices and battery chargers. When this power supply is switched ON, its internal input side capacitors start charging resulting in very high surge of Inrush Current for a few milliseconds. This surge of inrush current / power may reach up to 15 times the Continuous Maximum Running Power Rating. The surge of inrush current / power will, however, be limited by the Surge Power Rating of the AC source.

4.8 Applicable Scope:

4.8.1, Vehicle/RV/Ship/Household/Office/Camping/Field Use/Laboratory/Fleet/Heavy duty trucks/work vehicles/buses/coaches. ect
Electronic devices are integral part of our lives. When traveling in car, RV or boat, during camping or other outdoor events,we need the mobile power solution for electronic equipment. The pure sine wave inverter is an ideal power back up for emergency or home power outage.

4.8.2 Applicable AC appliances

Energy saving lamp, LED bulb, LED lamp, hair dryer, TV, Computer, washing machine, household fan, cooker,micro wave oven, iron, soybean milk machine, juicer,blender, kitchen electronics,shaver, digital products, phone, printer, projector , audio, video, electric drill, hand tool, air conditioner, water pump, motor, packing machine,refrigerator, ect. Note: Please pay attention to the inductive load, for which the user should choose power inverter with 5-10 times higher in rated power. If not sure, please consult the manufacturer.

5 Trouble Shooting:

WARNING!
Do not open or disassemble the inverter without the manufacturer permission.

Attempting to service the unit yourself may cause the risk of electrical shock or fire. **Problems and Symptoms**	**Possible Cause**	**Solutions**
Can not turn on	Battery damaged, or bad DC cable connection	Change battery, check DC cables and terminations
No AC power output. Red LED always on	Output overload or short circuit	Decrease load, check AC cable. Remove load, check output
No AC power output. Red LED on	Low battery voltage or high battery voltage	Check battery voltage, charger battery, check DC cable terminations
No AC power output. Red light on	Over temperature shut-down	Check if there is proper ventilation. Check if there are any objects or barriers blocking the vents or fans

6. FAQ, Frequently Asked Question

6.1. What is the difference of pure sine wave inverter and modified sine wave inverter.
Modified sine wave inverter use less elaborate switching and filtering circuitry. There would be electrical noises or interference which can prevent these inverter from properly powering certain loads. The frequency and voltage to their outputs may vary and contain some noise and distortion. It can run some resistive load like light bulb ect. But it is not good for many appliances and affects use life of the appliances.
Pure sine wave inverter produces the pure sine wave power which is as good as the grid power. With today's technological advancements,there are more electronics which require true sine wave power to operate correctly. Pure sine wave inverters are designed to emulate the power. Some appliances require pure sine wave, including computers, digital clock, battery charger, light dimmers, auto and visual equipment, variable speed motors, pump, air conditioner, and precision machines, induction cooker, micro wave oven, compressor, water pump, ect.Pure sine wave inverters have distinct advantage over modified sine wave inverters in terms of performance, power consumption.Choose pure sine wave inverter for the goodness and longevity of your appliances.

6.2. How to choose a suitable power of inverter?

It depends on the power of the appliances. Choose the power inverter based on the maximum power of the AC load. For resistive load such as cooker for 800w, choose1000W inverter. For inductive load such as refrigerator, A/C,pump,motor, compressor ect, the surge power can be 5-10 times higher. Please choose the power inverter with the power of 5-10 times or higher.

6.3. How long can the power inverter last to power up my appliances?
It depends the power of the AC appliances and the capacity of the batteries. For example, for a 12V,100Ah battery to power up an appliance of 300W. Theoretically, the working time=12V*100AH*0.8*0.9/300w=2.88hours. Note: 0.8 is the battery discharge coefficient,0.9 is the inverter's conversion efficiency)

6.4 How to connect the batteries?
6.4.1Series Connection
When two or more batteries are connected in series, the voltages will add up but their Ah capacity remains the same. Please see the chart. When the 4 pcs of 6V, 200Ah batteries connected in series, a battery bank of 24v with a capacity of 200Ah will be made.

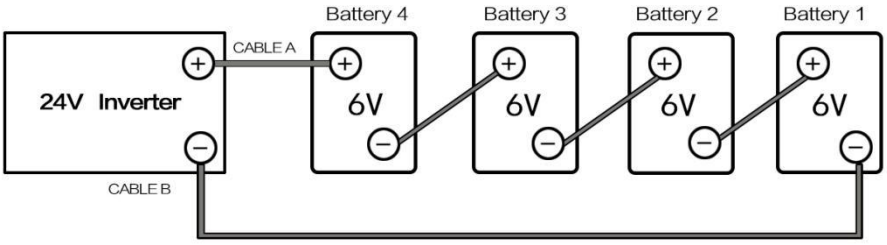

6.4.2 Parallel Connection
When two or more batteries are connected in parallel, the voltage will remain the same but their Ah capacity will add up. Please see the chart. When the 4 pcs of 12V, 100Ah batteries connected in parallel, a battery bank of 12v with a capacity of 400Ah will be made.

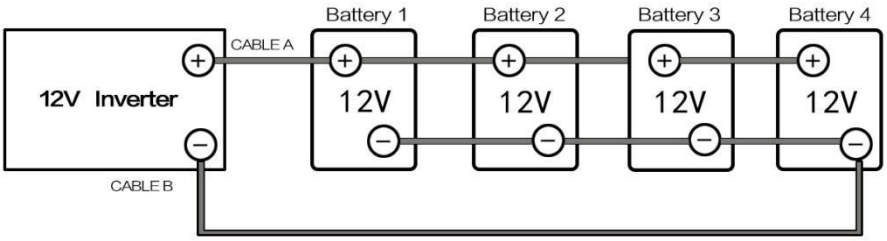

6.4.3Series Parallel Connection

The following chart shows a series- parallel connection consisting of four 6V, 200AH batteries to get a 12V, 400Ah battery bank. For string 1, two 6v, 200ah batteries are connected in series to get a 12v, 200Ah battery. Do the same to have string 2. The 2 strings are connected in parallel to have 12v,400Ah bank.

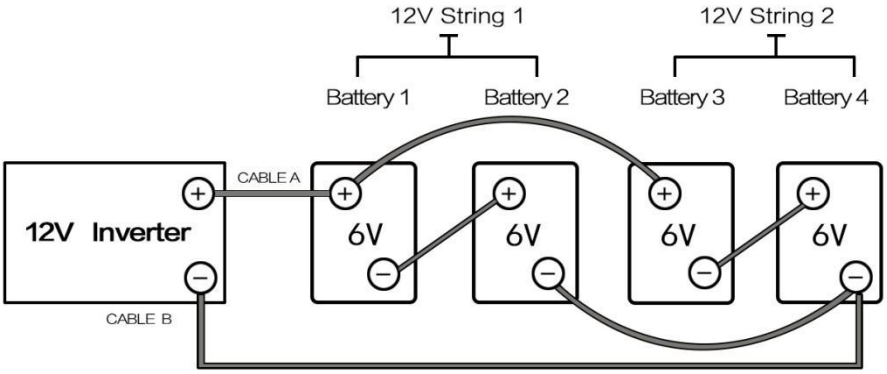

7. Warranty

One year warranty that commences from the date of purchase, under the following conditions:

• That all defects are attributable to material or production defects/errors and not improper use (warranty is void if the unit is improperly used, improperly installed or damaged through negligence)

• The warranty claim is made within the warranty period (proof of purchase required)

• Any unit covered under warranty will be repaired or replaced at the discretion of the distributor, after being assessed by the distributor and deemed a defect covered by warranty

• Warranty does not cover parts such as external case, fuses, connectors, input leads, etc.