litter-robot.com

INSTRUCTION MANUAL

litter·robot® 3

by whisker

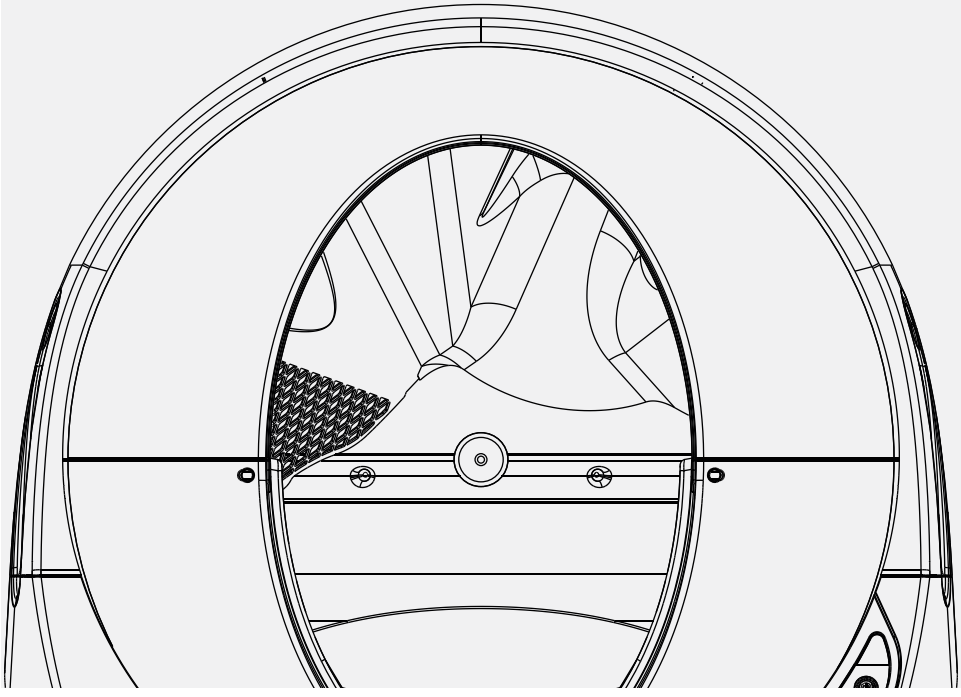

Thank you for purchasing a Whisker product!

This manual will help you get the most out of your Litter-Robot. We will guide you through the setup process, as well as provide you with useful tips and advice for acclimating your cat to their new automatic, self-cleaning litter box.

Whisker exists to make life for pets and pet parents endlessly better. As the leading innovators in pet tech and refined pet accessories, we work tirelessly to solve problems and deliver smarter insights for pet parents while enriching the lives of pets. We pride ourselves on our customer experience and, should you be dissatisfied for any reason, promise to make your return easy.

Enjoy your Litter-Robot, and enjoy your freedom!

Jacob
President & CEO

Brad
Founder & Chief Inventor



Important Safety Instructions

- **Always** be sure any cat in your household that might use the Litter-Robot weighs at least 5 pounds. Cats must weigh 5 pounds or more to safely use the Litter-Robot in Automatic Mode.
- **Always** place the Litter-Robot on a firm, level surface. Avoid soft, uneven, or unstable flooring, which may affect the ability of the unit to detect your cat. If using litter mats or rugs, place in front of, or completely under, the unit. Do not place mats partially under the unit. Use only low pile (1/4 inch) rugs and mats.
- **Always** unplug the unit before servicing.
- **Never** force your cat into the Litter-Robot.
- **Never** put anything in the unit other than clumping litter or litter beads and crystals that are small enough to pass through the screen.
- **Never** sit on or place anything on top of the Litter-Robot.
- **Never** push the Litter-Robot against a wall or into a corner (must not be touching any walls).
- **Never** remove the Globe or Bonnet while the unit is rotating or turn the unit on if the Globe or Bonnet are removed.
- **Never** wet or submerge the Bonnet or Base.
- **Never** allow children and persons with reduced physical, sensory, or mental capabilities or lack of experience and knowledge use, clean, or maintain the Litter-Robot without supervision, instruction concerning its use in a safe way, and understanding of the hazards involved. Children below 8 years of age should not be allowed contact with the Litter-Robot.
- **Never** allow children or others to play with the Litter-Robot.
- **Never** use an external power supply other than the one provided with the unit.
- If the external power supply is damaged, please contact us for a replacement.
- **Never** modify the Litter-Robot hardware. Doing so could impact important safety features and will void your warranty.

Table of Contents

Important Safety Instructions 5
Components and Dimensions 8
Setting Up Your Litter-Robot 10
Introducing Your Cat to the Litter-Robot 12
Ongoing Maintenance 13
Cycles 14
Control Panel - Button Functions 16
- Power Button 16
- Cycle Button 17
- Empty Button 18
- Reset Button 19

Control Panel - Indicator Lights 20
Cat Sensor 22
Drawer Full Indicator 23
Automatic Night Light 23
Bonnet 24
Key 24
Step Mat 25
8-Hour Sleep Mode 25
Wait Time Setting 26
Control Panel Lockout 26
Optional Backup Battery 26
Use & Care 27
Safety Features 32
Frequently Asked Questions 34
In-Home Trial 37
Contacting Customer Experience 37

Components

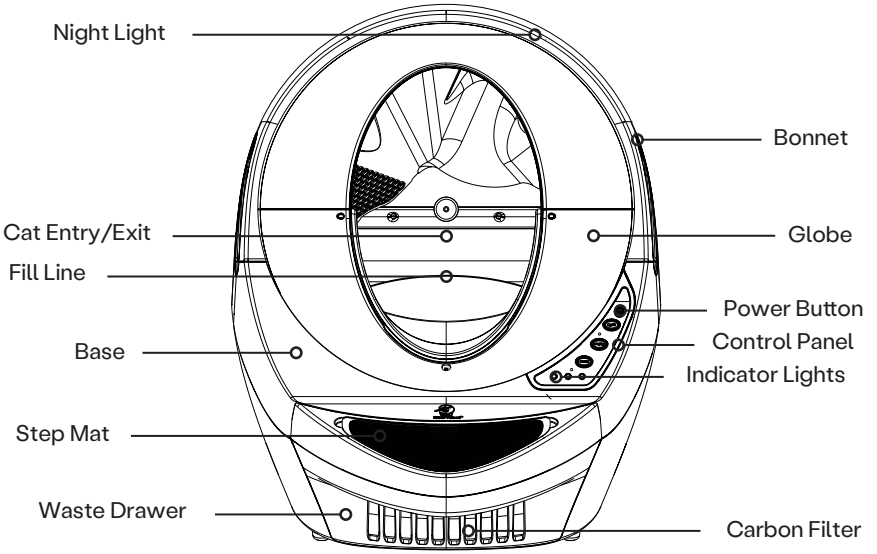

Front View

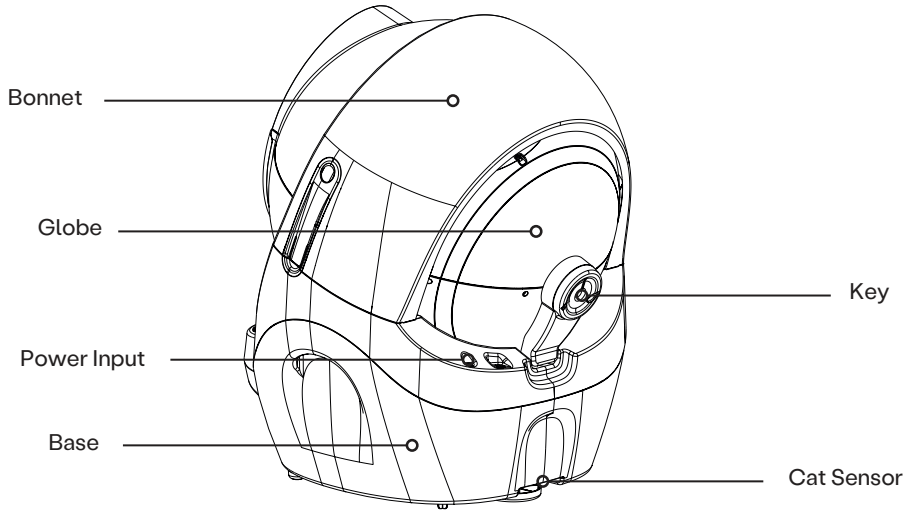

Rear View

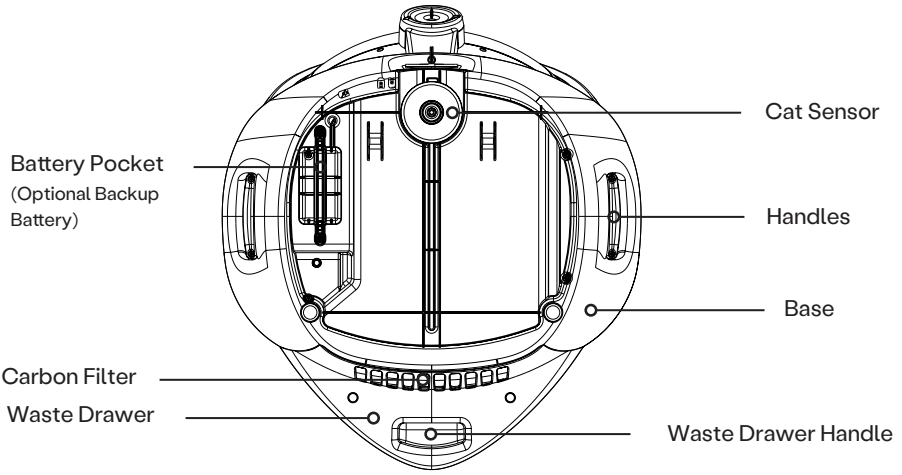

Bottom View

Dimensions

	Height		Width	x	Depth	Weight
Fully Assembled	29.50”	x	24.25”	x	27.00”	24 lbs.
Waste Drawer	5.00”	x	12.50”	x	16.00”	
Entryway	15.50”	x	10.25”			
Inside Globe	15”-17” Depending on litter level	x	20.00”	x	20.00”	
Litter Bed			14.00”	x	14.00”	
Floor to Step	7.10”					
Step to Entryway	6.30”					
Floor to Entryway	13.40”					

Setting Up Your Litter-Robot

Your Litter-Robot comes fully assembled and ready to use. Get started by following the steps below.

Placement

- ❑ If possible, place the Litter-Robot in the same location as the old litter box (at least during transition).
- ❑ Make sure the unit is on a firm, level surface. Avoid soft, uneven, or unstable flooring.
- ❑ Keep the unit indoors in a cool, dry location. Reduce exposure to high temperature and humidity.
- ❑ Locate the unit near a power outlet. Ensure the unit isn't pushed against a wall or into a corner (must not be touching any walls).
- ❑ Place litter mats or rugs in front of, or completely under, the unit. Do not place mats partially under the unit. Use only low pile (1/4 inch) rugs and mats.

Litter

Fill the Globe through the opening with **clumping litter** until it meets the raised Fill Line when spread flat (about 8-10 pounds by weight or 1 gallon by volume). Be careful not to overfill the Globe.

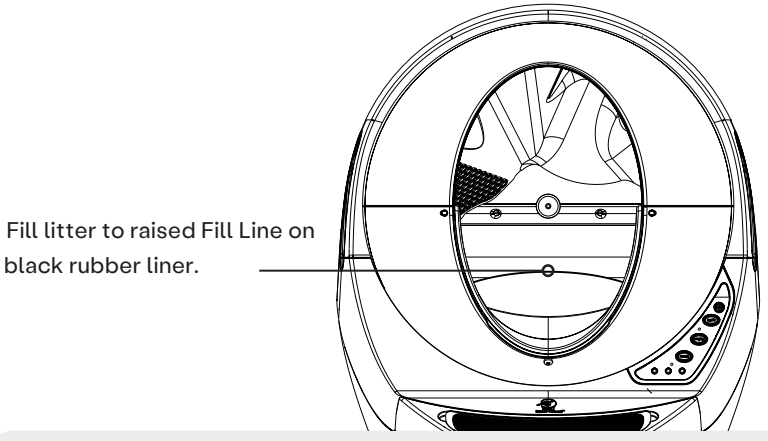

The Litter-Robot litter sifting system requires **clumping** litter to work properly.

We recommend a high-quality, clay-clumping litter. Use of lightweight litters, such as corn or wheat, may require more weight to activate the Cat Sensor. Litter beads and crystals that are small enough to pass through the screen will also work (periodic changing of this type of litter is required).

DO NOT use litters that are the strictly absorbent, non-clumping, loose-clumping, newspaper-based, or wood-based pellets.

If you are using a litter alternative not listed here, please contact Customer Experience to make sure you are using a compatible litter.

Tip: When filling the Litter-Robot for the first time, it is best to continue using the brand of litter you were using previously—as long as it is a clumping type of litter. Your cat will need to adjust to the new litter box, and introducing a new litter at the same time may increase his anxiety. However, if you are currently using a non-clumping litter, you will need to switch to a clumping type.

Power and Initial Clean Cycle

Plug the small end of the Power Supply into the power input at the back of the Base. Then plug the AC/DC adapter into a wall outlet.

Locate and press the Power button. The Litter-Robot will perform an initial Clean cycle that will last about 2 minutes. Learn more about the Clean cycle on page 14.

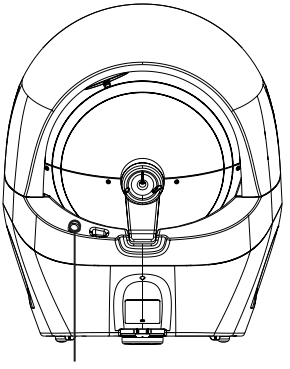

Congratulations!

Your Litter-Robot is now ready to use; however, we recommend powering the unit off until your cat/s become familiar with and begin using the Litter-Robot.

Introducing Your Cat to the Litter-Robot

Most likely, your cat will quickly adapt to the Litter-Robot. Here are some ways to facilitate the transition:

1. Place the Litter-Robot in the same location as the current litter box, set it up (make sure you add litter to the Globe), and make sure it is turned off. Give your cats a day or two to explore the Litter-Robot. If your cats show no interest, entice them to approach the Litter-Robot by using some catnip or a favorite treat.
2. Add a scoop of litter from the old litter box to provide a familiar scent for your cat.
3. Place treats on the step or around the Litter-Robot so your cat associates rewards with the unit.
4. Since cats are curious and love to go into boxes, try putting the original packaging over the Litter-Robot with a hole cut out for the entryway and drawer.
5. Once you notice that your cats have used the Litter-Robot, power the unit on to cycle the unit. Encourage your cats to be present, so they can observe the motion and become familiar with the sound of the Litter-Robot while you are there to reassure them. Turn the unit off again once the cycle is complete (the Litter-Robot should be in the Home position). We recommend that you no longer clean the old litter box once your cats have used the Litter-Robot.
6. If your cats are not using the Litter-Robot within a few days, continue using the old brand of litter in the old litter box, and let it go as long as possible without cleaning it. Cats prefer a clean litter box and a dirty litter box might persuade them to use the clean Litter-Robot. Also consider replacing the litter in the Litter-Robot with a litter specifically formulated for litter box training.

Once your cats are consistently using the Litter-Robot, you can turn the unit on and leave it on to operate in Automatic Mode—and remove the old litter box.

Congratulations, you have successfully introduced your cats to the Litter-Robot. Enjoy your freedom from scooping!

Ongoing Maintenance

Empty the Waste Drawer when indicated by the flashing blue light on the Control Panel.

How often you will need to empty the Waste Drawer depends on the number and size of your cats. For two average-sized cats, twice per week is typical. For a single cat, once per week is usually sufficient.

Pull out the Waste Drawer using the handle below the step, then gather the edges of the liner bag and dispose.

You can use Litter-Robot custom-fit, biodegradable Waste Drawer Liners or any 10-13-gallon trash bags.

To install a new drawer liner, open the bag and roll down the edge about four times. Starting at the back of the drawer, push the rolled edge of the bag into each of the four tabs, keeping the bag taut as you work forward. Slide the drawer back in, being careful not to push the unit against the wall or into a corner (must not be touching any walls). Then, press the Reset button to reset the Cat Sensor.

Add litter as needed.

Check the litter level once per week or each time you empty the Waste Drawer. Add just enough litter to meet the raised Fill Line inside the Globe, and be careful not to overfill it. After adding or removing litter, press the Reset button to reset the Cat Sensor.

Press the Reset button.

Any time you affect the weight or placement of the unit (including emptying the Waste Drawer, adding or removing litter, or cleaning or moving the unit), press the Reset button to ensure the Cat Sensor will detect your cat and cycle properly.

See Use and Care on page 27 to learn about the Carbon Filter, Base Seal Strips, Waste Drawer Liners, and how to clean the Litter-Robot.

Clean Cycle

After your cat leaves the Globe, the Litter-Robot automatically performs a Clean cycle. The patented sifting system separates the clumps from the clean litter and deposits them into the Waste Drawer below. It takes about 2 minutes. You can also press the Cycle button to start a Clean cycle.

During a Clean cycle, press any button to pause the cycle. Press the Cycle button to resume the cycle. Press the Reset or Empty button to abort the cycle and return the Globe to the Home position.

How it works:

The Litter-Robot is ready for use when the Globe is at the Home position and the blue light on the Control Panel is on.

1. When a cat enters the Globe, the Cat Sensor is activated; the blue light turns off and the red light turns on.
2. Once the cat exits the Globe, the countdown to a Clean cycle begins. When the Wait Time (see page 26) has elapsed, the red light turns off and the yellow light turns on as a Clean cycle begins.
3. The Globe rotates counterclockwise. The yellow light will be on while cycling.
4. During rotation, a weight behind the black rubber Globe liner causes the liner to fall away from the Globe to ensure any stuck-on clumps are removed.
5. The screen passes through the litter, separating the clumps from the clean litter. The clean litter is collected in a chamber behind the screen.
6. As the Globe rotates to Dump position, the waste clumps fall through the Waste Port in the Waste Drawer.
7. The Globe then rotates clockwise, toward the Home position. The Globe liner will fall back into place and the clean litter will spill back into the litter bed.
8. The Globe will rotate past the Home position to level the litter before finally returning to the Home position. The yellow light turns off and the blue standby light turns on.

If your cat re-enters the Globe during the Wait Time countdown (red light is on), the Cat Sensor detects that weight and will not cycle with your cat inside (see page 32). Once your cat exits, a new countdown will begin.

Empty Cycle

The Empty cycle allows you to empty all of the litter from the Globe into the Waste Drawer for easy disposal. Use this cycle to change out the whole bed of litter or before cleaning the Globe (see page 29).

Press the Empty button to start an Empty cycle.

During an Empty cycle, press any button to pause the cycle. Press the Cycle button to resume the cycle. Press the Reset or Empty button to abort the cycle and return the Globe to the Home position.

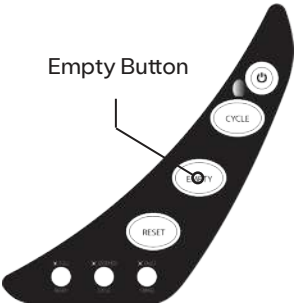

How it works:

1. The Globe rotates clockwise. The yellow light on the Control Panel will be on while cycling.
2. As the Globe rotates, the litter will fall through the Waste Port into the Waste Drawer.
3. After the litter is emptied, the Globe will stop with the yellow light on and await your action. (You may need to sweep any remaining litter toward the Waste Port.)
4. Press any button to return the Globe to the Home position.

IMPORTANT: Supervise and prevent your cat from entering during the Empty Cycle, as the unit may not detect your cat without litter in it.

Control Panel - Button Functions

Power Button + (Automatic Night Light)

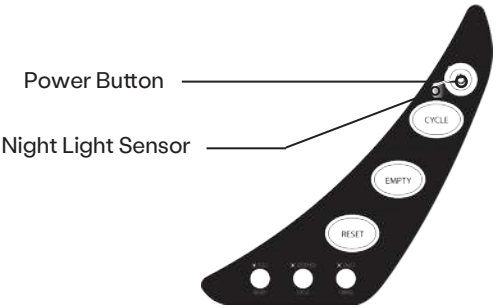

Press and Release: Turns the system power on and off.

Press and Hold: Toggles the Automatic Night Light function on and off (see page 23).

The Litter-Robot arrives with the Automatic Night Light function activated. When the light sensor detects low light conditions, the Night Light turns on automatically.

Check the status of the Night Light function by covering the light sensor (located above the Cycle button on the Control Panel) to see if the Night Light comes on or not.

To turn the Night Light function off, press and hold the Power button for about 5 seconds. The Night Light will flash on, then off.

To turn the Night Light function on, press and hold the Power button for about 5 seconds. The Night Light will flash on and, depending on the ambient light, the Night Light will either stay on (if low light) or turn off (if bright light).

Cycle Button + [8-Hour Sleep Mode]

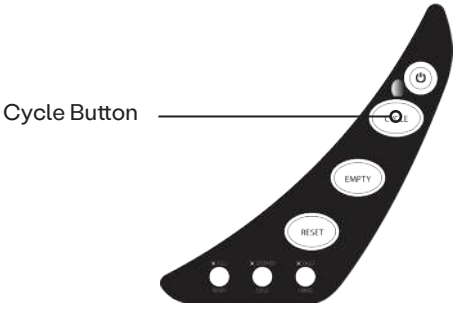

Press and Release: Starts a Clean cycle (see page 14).

To pause a cycle, press any button on the Control Panel. Press Cycle to resume the cycle.

To abort the Clean cycle, press any button to pause the cycle, then press Empty or Reset to return the Globe to the Home position.

Press and Hold: Activates 8-Hour Sleep Mode (see page 25).

In Sleep Mode, the yellow light will be on in addition to the blue standby light. The Cat Sensor will be deactivated for the next 8 hours and the unit will only cycle if you press the Cycle button.

Immediately after the 8-hour period, the unit will perform a Clean cycle, then return to the Home position with the blue light on. The Cat Sensor will be active again.

Once set, the 8-hour period repeats every 24 hours. The start of the period is determined by when the mode is set initially.

To exit this mode, press and hold the Cycle button until the yellow light turns off, or, if only the blue light is on (you are not within the 8-hour sleep period), the yellow light will flash to indicate you have exited this mode.

Empty Button + [Wait Time Setting]

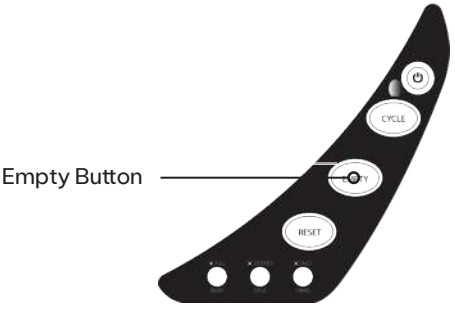

Press and Release: Starts an Empty cycle (see page 15), which empties all litter from the Globe into the Waste Drawer for easy disposal. During the Empty cycle, the Globe will rotate clockwise, then stop with the yellow light on and await your action. Press any button to return the Globe to the Home position.

To pause the Empty cycle, press any button. Press Cycle to resume the Empty cycle or Empty or Reset to abort the cycle and return the Globe to the Home position.

IMPORTANT: Supervise and prevent your cat from entering during the Empty Cycle, as the unit may not detect your cat without litter in it.

Press and Hold: Enters Wait Time Setting mode (see page 26). One of the lights will start flashing, indicating the current Wait Time Setting. Use the Reset button to toggle to the next setting: blue for 3 minutes, yellow for 7 minutes, and red for 15 minutes. Press and hold the Empty button to save the setting. The blue light will blink to confirm, then return to standby.

The Wait Time is the time that elapses starting from when a cat exits the Globe until the unit performs a Clean cycle.

It may be useful to reduce the Wait Time to minimize odor and/or the time that the waste is available to other pets—such as dogs. However, reducing the Wait Time may reduce the cleaning effectiveness if clumps do not have enough time to set up. Extend the Wait Time when using a lower-quality clumping litter that needs more time to set up.

Reset Button + [Control Panel Lockout]

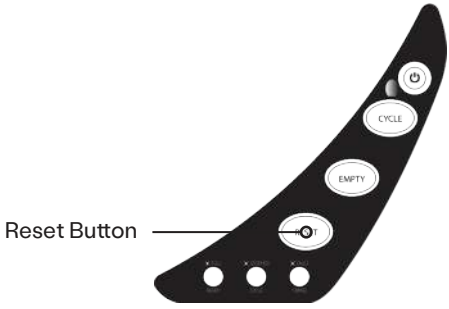

Press and Release:

When pressed while the Globe is at the Home position with the blue light on, it resets the Cat Sensor.

When pressed during a cycle, it pauses the cycle. If pressed again while paused, it will abort the cycle.

If pressed when the red light is on, it cancels the Wait Time and the unit returns to standby (blue light on).

IMPORTANT: Any time you do anything that affects the weight or placement of the unit, including adding or removing litter, emptying the Waste Drawer, or moving or cleaning the unit, press the Reset button once you are done. The Reset button adjusts the Cat Sensor automatically, ensuring the Litter-Robot will detect your cat and cycle properly.

Press and Hold: Activates Control Panel Lockout (see page 26), indicated by the blue light blinking momentarily.

While in Control Panel Lockout mode, press and hold the Reset button to exit the mode, indicated by the blue light blinking momentarily.

This setting will disable all button functions on the Control Panel while allowing the unit to function normally in Automatic Mode. During Control Panel Lockout you can still turn the unit off by pressing and holding the Power button for 3 seconds.

Control Panel - Indicator Lights

Blue Light On: OK/Standby

The unit is OK and ready for your cat's next use.

Blue Light Flashing: Waste Drawer is Full

The Waste Drawer is approaching full (see page 23). Remove the waste, install a new liner, then press Reset to cancel the flashing light and adjust the Cat Sensor.

Blue and Yellow Lights On: Sleep Mode

The Litter-Robot is in 8-Hour Sleep Mode (see page 25).

Yellow Light On: Cycling/In Use

The Litter-Robot is cycling (Clean or Empty cycle).

Yellow Light Flashing: Cycle Interrupted

A yellow light flashing **slowly (about once per second)** indicates a cycle has been interrupted by one of the following:

- While cycling, if the **Cat Sensor** is activated by a cat entering the Globe, the unit will stop and the yellow light will flash. The unit will start to cycle again 15 seconds after your cat has left the Globe.
- If the **Bonnet** is removed while cycling or while the Globe is at the Home position, the unit will stop (if previously cycling) and the yellow light will flash. The unit will resume its previous function 5 seconds after the Bonnet is replaced (see page 30-31).

A yellow light flashing **quickly (about four times per second)** indicates a cycle has been interrupted by the **Anti-Pinch Safety Feature** (see page 32). While cycling, if a potential pinch condition is detected, the Globe will stop and reverse direction for 2 seconds. The yellow light will begin flashing quickly, awaiting your action. Once the blockage is cleared, press any button to return the Globe to the Home position.

Red Light: Cat Sensor Activated and Wait Time Countdown

The Cat Sensor has been activated by a cat entering the Globe. Once the cat exits, the Wait Time countdown to a Clean cycle will begin (see page 26). You can cancel the timer (red light) by pressing Reset.

Red Light Flashing: Cat Sensor Fault

The Cat Sensor has been continuously activated for 30 minutes or more, either by a cat that won't leave the Globe or by too much weight in the unit.

Check for excess weight, such as too much litter or waste. When you are done, press the Reset button or turn the unit off then back on to reset the Cat Sensor.

Yellow → Red Lights Flashing Sequentially:

Motor detects obstruction or jam during clockwise rotation. Turn the unit off and remove the Bonnet and Globe. Check for gear/motor obstruction. Reassemble the unit and verify the proper litter level. Power the unit on and let it cycle. If the problem persists, contact Customer Experience.

Blue → Yellow → Red Flashing Sequentially:

Cannot find Dump position. The unit will continue to function in Automatic Mode. Contact Customer Experience.

Red → Yellow → Blue Flashing Sequentially:

Cannot find Home position. The unit will continue to function in Automatic Mode. Contact Customer Experience.

Blue-Yellow-Red Flashing Simultaneously:

Cannot find Home or Dump positions. The unit will not cycle. Contact Customer Experience.

Blue → Red Flashing Sequentially:

Motor detects obstruction or jam during counter-clockwise rotation. Turn the unit off and remove the Bonnet and Globe. Check for gear/motor obstruction. Reassemble the unit and verify the proper litter level. Power the unit on and let it cycle. If the problem persists, contact Customer Experience.

Cat Sensor

The Cat Sensor is a weight-sensitive switch that detects when a cat enters and exits the Globe.

Your cat must weigh at least 5 pounds to trip the Cat Sensor. Do not use the Litter-Robot in the unattended Automatic Mode with kittens that weigh less than 5 pounds. Use of lightweight litters, such as corn or wheat, may require more weight to activate the Cat Sensor. See FAQ: Can kittens use the Litter-Robot? on page 34.

For the Cat Sensor to accurately detect your cat, the Litter-Robot must be placed on firm, level flooring. Avoid soft, uneven, or unstable surfaces.

The Litter-Robot relies on the Cat Sensor to know when your cat is inside the Globe and when it's time to run a Clean cycle. Here's how it works:

- Each time the unit is powered on and at the end of each cycle, the Cat Sensor measures the weight of the unit to use as a baseline.
- When your cat enters the Globe, the Cat Sensor detects increased weight and prevents the Globe from rotating. When your cat exits, the Cat Sensor detects a decrease in weight and allows the countdown to a Clean cycle to begin.
- If the Cat Sensor is tripped during that countdown, a new countdown will begin once your cat leaves the Globe, ensuring it does not rotate with a cat inside.
- Eventually (3, 7, or 15 minutes later—depending on the setting), a Clean cycle will start, and upon finishing, the Cat Sensor will take another measurement of the weight to use as its new baseline.

Note: Weight applied on the step and/or step mat will not trip the Cat Sensor and stop the Globe's rotation. This is intentional, as we do not want to invite a cat to enter by stopping the Globe's rotation. If, however, the cat steps inside, the Globe will stop when rotating counter-clockwise or stop and reverse direction for 3 seconds when rotating clockwise.

To ensure the accuracy and reliability of the Cat Sensor, power the unit off before making any changes that will affect the weight of the unit, including emptying the Waste Drawer, adding or removing litter from the Globe, or cleaning or moving the unit. When you are done, turn the unit back on. The Litter-Robot will perform an initial Clean cycle and the Cat Sensor will take a new measurement of the unit's weight.

The Reset button is another way to reset the Cat Sensor after doing anything that affects the unit's weight. Press Reset firmly and quickly, then watch for the blue light to flash to confirm you have reset the Cat Sensor. Be careful not to rest on the unit as you press the button or your weight will influence the reading.

Drawer Full Indicator (DFI)

The Litter-Robot is equipped with infrared emitters and sensors located above the Waste Drawer that check if the drawer is full each time the Globe returns to the Home position. The Control Panel displays a flashing blue light when the DFI is activated. Upon the first activation of the DFI, the blue light flashes, and the Cat Sensor remains active. Upon the third activation of the DFI (after two more Clean cycles), the Cat Sensor deactivates and the unit will no longer cycle automatically. Check or empty the Waste Drawer, then press Reset to cancel the indicator and reset the Cat Sensor.

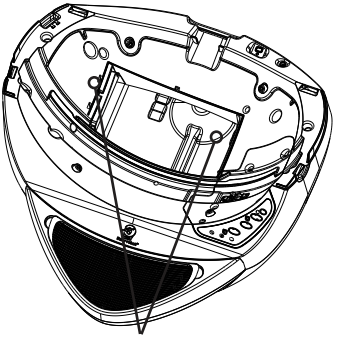

Drawer Full Indicators

Automatic Night Light

Although cats generally have excellent vision, aging and illness can diminish their ability to see in low light conditions. The Automatic Night Light, located in the upper Bonnet, is there to help guide your cat to the litter box. A light sensor located above the Cycle button turns the Night Light on and off automatically. Turn the Night Light function on and off by pressing and holding the Power button (see Control Panel - Buttons section, Power Button, page 16).

Bonnet

The Bonnet functions as a cover and guard for the Waste Port as the Globe rotates. The Bonnet also provides a mount location for the Night Light, wires, and electrical terminals that provide a low and safe 5VDC to the Night Light LED. The Globe will not rotate without the Bonnet installed (see Control Panel - Indicator Lights → Yellow Light Flashing, page 20). See page 30-31 for assembly instructions.

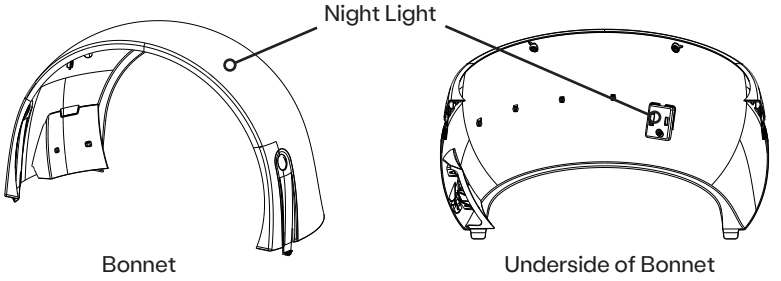

Key

The Key is located at the back of the Globe. Position the Key by snapping it into the pocket in the Base.

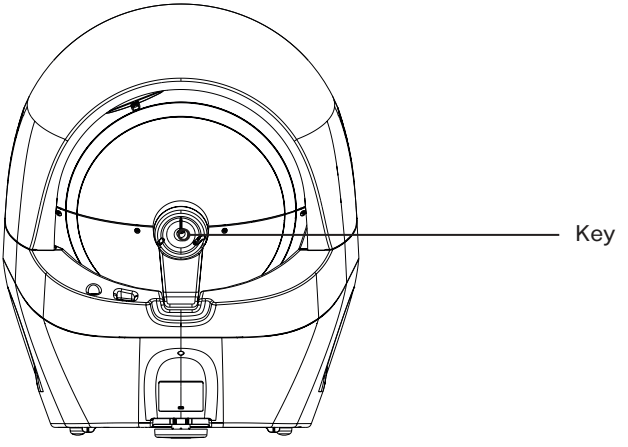

Step Mat

The Step Mat provides a soft, gripping surface for your cat's entry/exit, and acts as a litter catch to reduce litter tracking. The flexible, removable Step Mat can be cleared of litter by simply peeling up, turning upside down inside the Globe, and flexing.

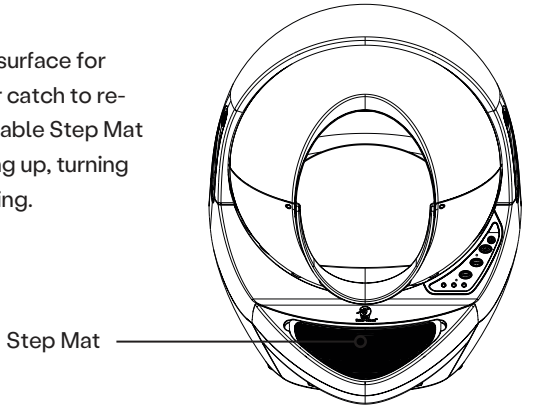

8-Hour Sleep Mode

This mode allows you to deactivate the Cat Sensor for 8 hours so the unit will not cycle automatically. Sleep Mode is useful for units located in bedrooms or areas where you may not want the unit to cycle for a period of 8 hours.

The 8-hour period is repeated every 24 hours; the start is determined by the time the mode is initially set.

To enter Sleep Mode, at the desired time, press and hold the Cycle button until the yellow light turns on (in addition to the blue standby light). Both the yellow and blue lights will be on during the next 8 hours, indicating the unit is in 8-Hour Sleep Mode.

When the 8-hour period expires, the unit will run a Clean cycle. Once the Globe has returned to the Home position, only the blue light will be on. When the 8-hour sleep period begins again automatically, both the yellow and blue lights will be on again.

To exit Sleep Mode, press and hold the Cycle button until the yellow light turns off. Or, if only the blue light is on because you are not within the 8-hour sleep period, the yellow light will flash to indicate you have exited this mode.

Wait Time Setting

The Wait Time is the elapsed time starting from when your cat exits the Globe until the unit starts a Clean cycle. It can be set for 3, 7, or 15 minutes. The default Wait Time is 7 minutes.

Reduce the Wait Time if it is important to minimize odor and/or the time that waste is available to other pets—such as dogs. However, reducing the Wait Time may reduce the cleaning effectiveness if clumps do not have enough time to set up. Extend the Wait Time when using a lower-quality clumping litter that needs more time to set up.

Press and hold the Empty button for about 5 seconds to enter Wait Time Setting mode. One of the lights will start flashing, indicating the current Wait Time Setting. Use the Reset button to toggle to the next setting: blue for 3 minutes, yellow for 7 minutes, and red for 15 minutes. Press and hold the Empty button to save the setting. The blue light will blink to confirm, then return to standby.

Control Panel Lockout

Control Panel Lockout disables button functions to prevent unwanted changes. The Litter-Robot functions normally in Automatic Mode during Control Panel Lockout.

Press and hold the Reset button for about 5 seconds to enter or exit Control Panel Lockout. The blue light will blink to confirm status.

While in Control Panel Lockout, you can still turn the unit off by pressing and holding the Power button for 3 seconds.

Optional Backup Battery

The Litter-Robot has the option of a Backup Battery. Using a sealed 12VDC, 1.3 Amp Hour battery allows the unit to continue working during power outages. When power to the Litter-Robot is interrupted, the unit automatically switches to Backup Battery power, indicated by the Power button becoming backlit by a yellow light.

Note: The Night Light function will be disabled during Backup Battery mode to conserve energy.

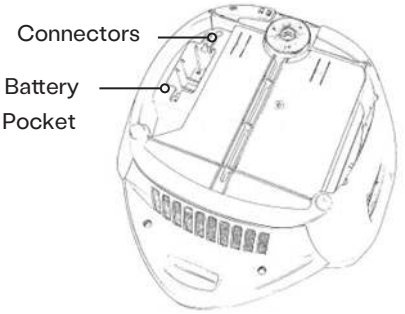

Underside of Base

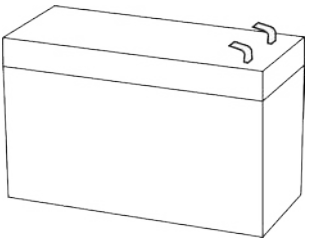

12VDC, 1.3 Amp Hour Battery

The battery pocket and connectors are located in the bottom of the Base. Backup Battery Kits include the battery, bracket, and screws, and can be ordered from Litter-Robot.com.

Use and Care

Installing Waste Drawer Liners

The Litter-Robot ships with a Waste Drawer Liner installed. These biodegradable liners are made specifically for the Litter-Robot, but any 38-49-liter trash bag will also work.

1. Open a new liner or bag.
2. Roll down the edge about four times.
3. Starting at the back, push the edge of the bag into each of the four liner tabs, keeping the bag taut as you work forward.

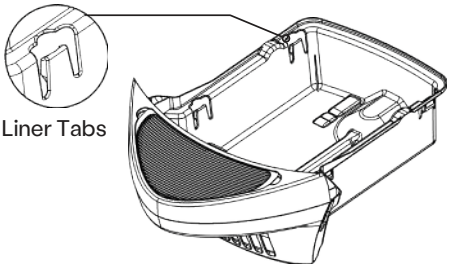

Carbon Filter

The Litter-Robot is equipped with a flexible Carbon Filter pad for absorbing odors in the drawer. Easily removed and installed, replace the Carbon Filter as needed. Under normal use, one filter should last a few months. The Carbon Filter is not required for the unit to function.

Replacement Carbon Filters can be ordered from Litter-Robot.com.

Base Seal Strips

The Litter-Robot is equipped with brush-type Seal Strips that help contain odors within the Waste Drawer and Base.

Replace the Seal Strips when you notice they are worn flat or peeling up. Make them last longer by trimming loose edges between replacements. Be careful not to get them wet when cleaning the Base or they may begin to peel.

Replacement Seal Strips can be ordered from Litter-Robot.com.

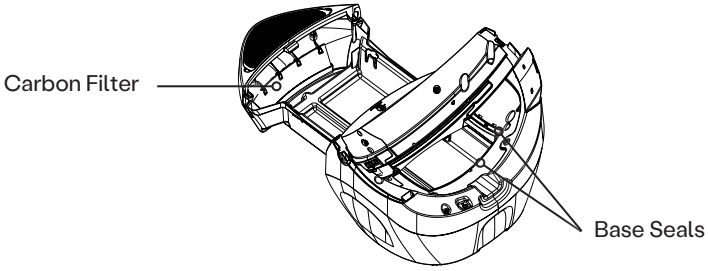

Emptying the Litter-Robot

1. Press the Empty button to cycle the Globe clockwise, which will allow the litter to fall through the Waste Port and into the Waste Drawer for easy disposal.
2. If litter remains in the Globe, sweep the granules toward the Waste Port.
3. Press any button to return the Globe to the Home position.

IMPORTANT: Supervise and prevent your cat from entering during the Empty Cycle, as the unit may not detect your cat without litter in it.

Cleaning the Globe

1. Press the Empty button to cycle the Globe clockwise, which will allow the litter to fall through the Waste Port and into the drawer for easy disposal. Sweep any leftover litter toward the Waste Port. Then, press any button to return the Globe to the Home position. Ensure that all litter has been removed from the Globe—wet litter turns into messy clay!
2. Turn the Litter-Robot off and unplug the unit.
3. Remove the Bonnet: Press and release the snap tabs on both sides of the Bonnet, then lift and rotate the Bonnet off of the Globe and carefully set it aside.
4. Remove the Globe: With two hands, lift the Globe off the Base.
5. Clean the Globe with water and a mild soap. There are no electronic components in the Globe that can be damaged by soap and water. If the Globe has become extremely dirty, it can be soaked and cleaned with a water hose or power washer.
6. Let the Globe dry completely before reassembling it to the Base and attaching the Bonnet (see page 30-31).

For a quick touchup, you can use a disposable towelette to wipe the inside and upper half of the Globe (without removing the litter). The Litter-Robot can be used immediately, since drying is nearly instantaneous.

Cleaning the Waste Drawer

1. Pull the drawer out.
2. Remove the carbon filter.
3. Clean the drawer with soap and water.
4. Make sure the carbon filter is dry before reinstalling it.

Cleaning the Base

- Never submerge or soak the Base. The Base contains the Cat Sensor and electronics.
- Wipe the surfaces of the Base with a cloth dampened with a disinfectant. If using a spray, spray away from the Base directly onto a cloth or paper towel, so disinfectant does not get on the electronics.
- Do not use bleach.

Reinstalling the Globe and Bonnet

See diagrams on the next page.

1. Place the Globe on the Base in the approximate Home position (black lip of the opening at the bottom) with the gear track aligned with the groove in the Base.

   Note: The rotational axis of the Globe is positioned at a 20-degree angle relative to the floor, so the Globe is installed slightly tilted in the Base.
2. Rotate the black Key at the back of the Globe into the pocket of the Base.
3. Find the tabs at the bottom and rear of the Bonnet. Align and insert the tabs into slots in the Base.
4. Rotate the Bonnet downward with light pressure on the sides such that the Bonnet hugs the Globe. This will help to ensure proper alignment of the Bonnet snaps with the slots in the Base. Once the Bonnet snaps have entered the slots, push down on the Bonnet from the top and make sure the Bonnet snaps have latched into place and the Bonnet is secure.

   Note: The unit will not run without the Bonnet installed.

1

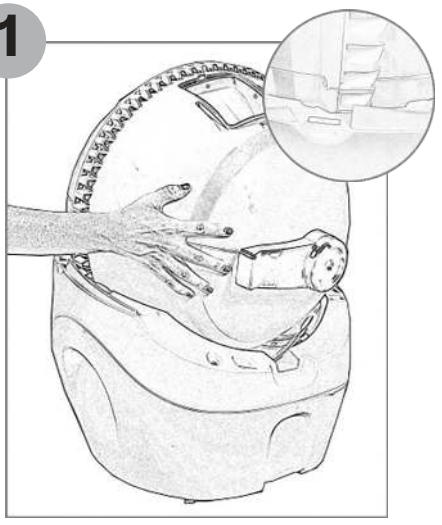

With Bonnet removed, align gear track on Globe with groove in Base.

2

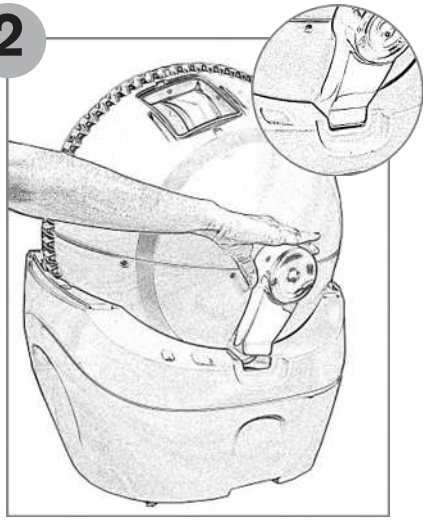

Rotate Key into pocket in Base.

3

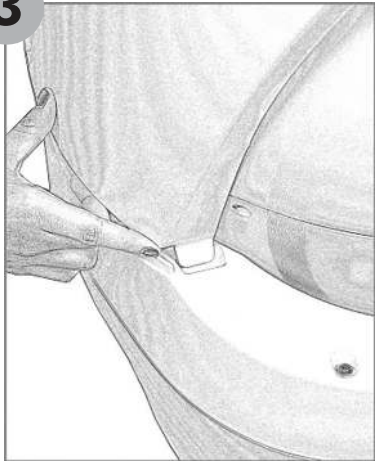

Located on each side of Bonnet, slide rear-facing tabs into slots in Base.

4

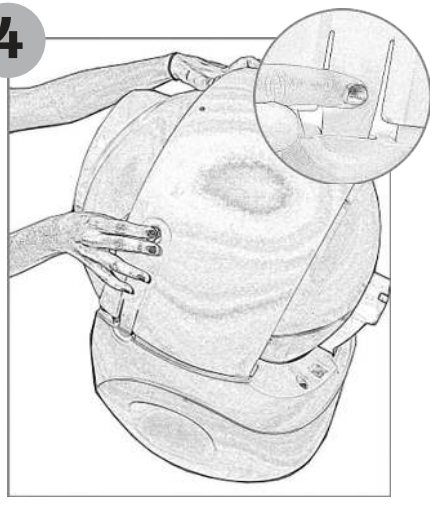

Rotate Bonnet downward, aligning tabs with corresponding slots in Base. Snap Bonnet securely into Base.

Safety Features

Bonnet

The Bonnet functions as a cover and guard for the Waste Port as the Globe rotates. The Bonnet also provides a mount location for the Night Light, wires, and electrical terminals that provide a safe, low 5VDC to the Night Light. The Globe will not rotate without the Bonnet installed (see Control Panel - Indicator Lights Yellow Light Flashing, page 20).

Cat Re-Entry Protection

If the Cat Sensor detects a cat trying to enter the Litter-Robot during a cycle, the Globe will stop when rotating counter-clockwise or stop and reverse direction for 5 seconds when rotating clockwise. It will wait 15 seconds before attempting to resume the cycle.

Note: Weight applied on the step and/or Step Mat will not trip the Cat Sensor and stop the Globe rotation. This is intentional, as we do not want to invite a cat to enter by stopping the Globe rotation. If, however, the cat steps inside, the Globe will stop when rotating counter-clockwise or stop and reverse direction for 5 seconds when rotating clockwise.

Anti-Pinch Safety Feature

The Litter-Robot is equipped with an Anti-Pinch Safety Feature to make the Litter-Robot extra safe for your cat.

While cycling, if a potential pinch condition is detected, the Globe will stop and reverse direction for 2 seconds. The yellow light will begin flashing quickly (about four times per second), awaiting your action. Once the blockage is cleared, press any button to return the Globe to the Home position.

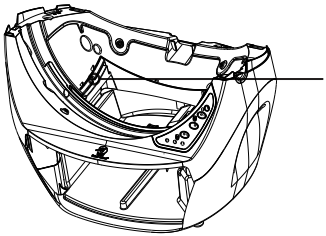

Overload Detection

If the Globe becomes jammed or overloaded when rotating counter-clockwise, the Motor will stop and the Globe will return to the Home position. The Control Panel will flash blue then red lights.

If the Globe becomes jammed or overloaded when rotating clockwise, the Motor will stop and reverse for 5 seconds. The unit will start to cycle again after 15 seconds, to attempt to return to the Home position. If the Globe is unable to reach the Home position after three attempts, the Globe will stop and the Control Panel will flash yellow then red lights.

If the Globe is able to reach the Home position after a jam or overload condition, the Control Panel will still flash the corresponding error code. The unit will continue to function in Automatic Mode.

If the Control Panel is indicating a jammed or overloaded error, turn the unit off and remove the Bonnet and the Globe. Check for gear/motor obstruction. Reassemble the unit and verify proper litter level. Power the unit on and let it cycle. If the problem persists, contact Customer Experience.

Frequently Asked Questions

Will my cat actually go inside the Globe?

Cats are generally curious and will investigate any new object. Cats that are already used to a covered litter box may be quicker to investigate.

We recommend that you place the Litter-Robot in the same location as the old litter box. You can leave the old litter box near the Litter-Robot for a short time. Take a cup of litter from the old litter box and add it to the clean litter in the Litter-Robot. The scent will be familiar, and the cat will be inclined to investigate.

Once your cat ventures inside and feels the litter under his paws, he will know what to do.

Can kittens use the Litter-Robot?

We do not recommend that kittens or cats that weigh 5 pounds or less use the Litter-Robot in the unattended Automatic Mode. Their low weight may not activate the Cat Sensor. Cats should weigh at least 5 pounds before using the Litter-Robot in Automatic Mode. We recommend leaving the Litter-Robot off and operating in "semiautomatic"mode. When you see your cat has used the Litter-Robot, turn it on, and the Litter-Robot will automatically perform a Clean cycle. Once it finishes (about 2.5 minutes), turn the power off. This way, your kitten is safe while she gets accustomed to the Litter-Robot at a young age, and you don't have to scoop the litter box!

CAUTION: Leave the Litter-Robot turned off and only start a Clean cycle manually until you are sure that all cats in your household are heavy enough to activate the Cat Sensor.

What if my cat won't use the Litter-Robot?

If you and your cat are not completely satisfied, just return your Litter-Robot within 90 days for a full refund of the purchase price. Please note that you are responsible for return shipping costs. Please contact Customer Experience to request a Return Authorization (RMA) number. We cannot accept return shipments without an RMA number.

What happens if my cat tries to enter the Globe while it is rotating?

The Cat Sensor will detect your cat once he enters the Globe and the motor will stop. Once your cat leaves the Globe, the Litter-Robot will wait 15 seconds before attempting to resume the cycle. See Cat Re-Entry Protection on page 32.

Are there any rakes or wires inside the Globe?

No, the Globe does not contain any rakes or wires that could hurt or harm your cat. The Litter-Robot was designed with your cat's safety in mind.

Are the electronics or power source dangerous to my cat?

No, there are no electrical components inside the Globe. The Litter-Robot operates on a safe 15 Volts DC using an adapter very similar to the ones you may have at home for a clock radio or for charging your cell phone.

Will the Globe turn while my cat is inside?

No, the Globe will not turn while your cat is inside. The Cat Sensor is tripped each time a cat enters, or re-enters the Globe, resetting the countdown timer to prevent the Clean cycle from starting for another 7 minutes.

What happens if the Globe jams?

If Globe jams or an excessive load condition occurs, the unit will detect the condition using our Overload Detection (see page 33). In addition, the Litter-Robot is equipped with an Anti-Pinch Safety Feature (see page 32).

Does the Litter-Robot require special litter?

No, the Litter-Robot simply requires clumping litter. We recommend a high-quality, clay-based clumping litter. Use of lightweight litters, such as corn or wheat, may require more weight to activate the Cat Sensor. Some silica gel litter beads and crystals can also be used with the Litter-Robot, as long as they pass through the screen.

Litters that do not work in the Litter-Robot are the strictly absorbent, non-clumping or loose-clumping litters, newspaper-based litters and absorbent wood pellet litter.

Does the Litter-Robot work with Feline Pine?

No, Feline Pine pellets are too large to pass through the sifting screen, which prevents the litter sifting system from working properly. Feline Pine clumping is also too fluffy to effectively pass through the sifting screen.

How much litter do I put in the Litter-Robot?

Fill the Globe with approximately 8-10 pounds of litter, until it meets the raised Fill Line on the black rubber Globe liner when spread flat. If there is too much litter in the Globe, it will be expelled into the Waste Drawer during the first few cycles. Since the waste clumps are removed during each cycle, there is no need to put excessive litter in the Globe.

How often do I need to add litter?

The Litter-Robot uses litter very efficiently since the patented sifting system only removes the clumps. We recommend checking the litter level against the raised Fill Line (on the black rubber liner of the Globe) each time you empty the Waste Drawer, which is about once per week for a single cat or twice for multiple cats. Be careful not to overfill the Globe.

Is dust a problem with the frequent rotation of the Globe and the movement of the litter?

No, any dust is negligible since the Globe rotates very slowly.

How often do I need to empty the Waste Drawer?

This depends on the number and size of your cats. For two average-sized cats, twice per week is typical. For a single cat, once per week is usually sufficient.

How often do I have to clean the inside of the Globe?

This depends on your personal preference and your cat's behavior. We recommend cleaning the inside of the Globe every one to three months. See Use and Care on page 27.

How do I clean the Litter-Robot exterior?

Cleaning the Litter-Robot exterior is easy. Just remove the Globe and the Drawer and give them a sponge bath, or take them outside for deep cleaning with the garden hose. All other surfaces can be wiped clean, but should not be submerged.

CAUTION: The Base and Bonnet of the Litter-Robot contain electrical components that should not be submerged. See Use and Care, page 27.

90-Day In-Home Trial

Buy with confidence knowing that your investment is backed by our 90-day in-home trial. If you or your cat are not satisfied with your Litter-Robot, simply return it for a refund of the purchase price. You only have to pay return shipping.

If you purchased your Litter-Robot through a source other than Whisker, you must coordinate the return with that source according to their return policy.

Contacting Customer Experience

If you have questions or need assistance, contact us! Visit our support site to get started and to troubleshoot.

Online Troubleshooting
whiskersupport.com

Version: LR3-8008-0K

litter·robot®
by whisker

1080 W Entrance Drive
Auburn Hills, MI 48326
litter-robot.com

