UVC9300SLSS

Universal Custom Hood Insert

DIMENSIONS AND INSTALLATION INFORMATION (IN INCHES)

INSTALLATION INFORMATION:
Before installing, consult installation instructions, packed with product, for current dimensional data.

ACCESSORIES:
UXCF91 – Charcoal Filter
UXRC1 – Remote Control (Wireless) – included
UXN70 – Recirculation Kit

AMP RATING	
120V	3.0

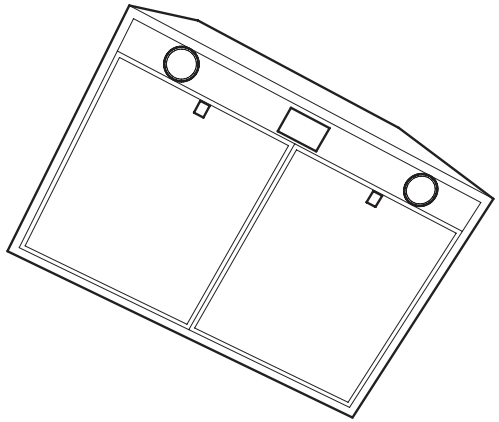

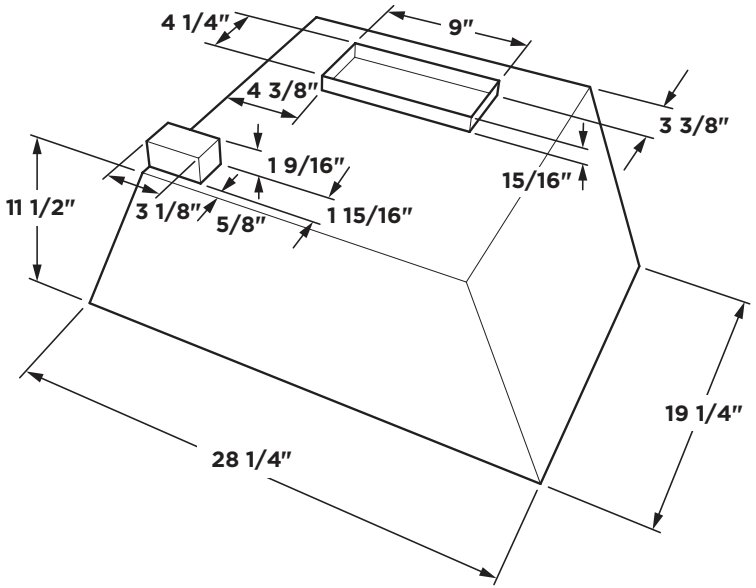

GE APPLIANCES

For answers to your Monogram, Café™, GE Profile™ or GE Appliances product questions, visit our website at geappliances.com or call GE Answer Center® Service, 800.626.2000.

ADA COMPLIANT

Specification Revised 12/23

UVC9300SLSS

Universal Custom Hood Insert

FEATURES AND BENEFITS

Adjustable CFM blower – High-powered 610 CFM blower range hood, adjustable downward to either 370 or 290 maximum CFM to accommodate different installation needs

Triple LED dimmable lighting (bulbs included) – LED modules ensure bright lighting for the entire cooking environment

Premium Baffle Stainless Steel Filters – remove odors and grease from your cooking area and easy to clean in your dishwasher

WiFi Connect – Control appliances with a smart device or just the sound of your voice

Electronic backlit controls – Add a sophisticated look with this up-front, easy-to-use display

Chef Connect – Automatically control the hood's lights and fan by syncing with the range

Remote control included – Activate and adjust your hood functions from anywhere in the kitchen

Four-speed fan control – Helps draw smoke, grease, odors and moisture out of the kitchen air

Model UVC9300SLSS – Stainless Steel

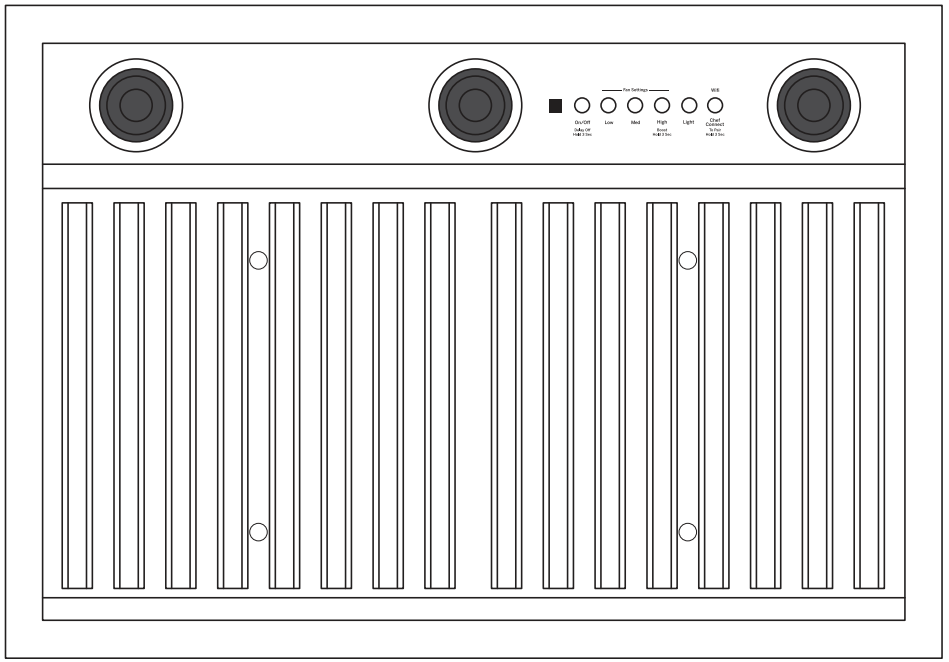

GE APPLIANCES

Specification Revised 12/23